[redacted]

#538

PIONEER 10 & 11

EUV EDR PHOTON EMISSION
DATA

72-012A-06A

73-019A-06A

Table of Contents

1. Introduction

2. Errata/Change Log

3. LINKS TO RELEVANT INFORMATION IN THE ONLINE NSSDC INFORMATION SYSTEM

4. Catalog Materials

    a. Associated Documents

    b. Core Catalog Materials

---

1. INTRODUCTION:

The documentation for this data set was originally on paper, kept in NSSDC's Data Set Catalogs (DSCs). The paper documentation in the Data Set Catalogs have been made into digital images, and then collected into a single PDF file for each Data Set Catalog. The inventory information in these DSCs is current as of July 1, 2004. This inventory information is now no longer maintained in the DSCs, but is now managed in the inventory part of the NSSDC information system. The information existing in the DSCs is now not needed for locating the data files, but we did not remove that inventory information.

The offline tape datasets have now been migrated from the original magnetic tape to Archival Information Packages (AIP's).

A prior restoration may have been done on data sets, if a requestor of this data set has questions; they should send an inquiry to the request office to see if additional information exists.

2. ERRATA/CHANGE LOG:

NOTE: Changes are made in a text box, and will show up that way when displayed on screen with a PDF reader.

When printing, special settings may be required to make the text box appear on the printed output.

Version	Date	Person	Page	Description of Change
01				
02				

3 LINKS TO RELEVANT INFORMATION IN THE ONLINE NSSDC INFORMATION SYSTEM:

http://nssdc.gsfc.nasa.gov/nmc/

[NOTE: This link will take you to the main page of the NSSDC Master Catalog. There you will be able to perform searches to find additional information]

4. CATALOG MATERIALS:

a. Associated Documents To find associated documents you will need to know the document ID number and then click here. http://nssdcftp.gsfc.nasa.gov/miscellaneous/documents/

b. Core Catalog Materials

PIONEER 10

EUV EDR PHOTON EMISSION DATA

72-012A-06A PSPA-00140

THIS DATA SET HAS BEEN RESTORED. THERE WERE ORIGINALLY 51 9-TRACK, 6250 BPI TAPES. EACH ORIGINAL TAPE CONTAINED AN IBM STANDARD LABEL AND A PATTREN OF THREE BCD FILES AND ONE BINARY FILE THROUGHOUT THE TAPE. WHEN THE TAPES WERE RESTORED THE LABELS WERE REMOVED BUT THE PATTREN OF THREE BCD FILES AND ONE BINARY FILE WERE CONVERTED TO THREE ASCII FILES AND ONE BINARY FILE. THERE ARE 41 RESTORED TAPES. THE DR TAPES ARE 3480 CARTRIDGES AND THE DS TAPES ARE 9-TRACK, 6250 BPI. THE ORIGINAL TAPES WERE CREATED ON AN IBM 360 COMPUTER AND WERE RESTORED ON AN IBM 9021 COMPUTER. THE DR AND DS NUMBERS ALONG WITH THE CORRESPONDING D NUMBERS AND TIME SPANS ARE AS FOLLOWS:

DR#	DS#	DD#	FILES	TIME SPAN
DR004326	DS004326	D054477	180	03/11/72 - 05/01/72
DR004327	DS004327	D054478	68	05/02/72 - 05/23/72
DR004328	DS004328	D054479	72	05/24/72 - 06/11/72
DR004329	DS004329	D054480	64	06/12/72 - 06/30/72
DR004330	DS004330	D054481	76	07/03/72 - 07/19/72
DR004331	DS004331	D048146	124	07/20/72 - 08/20/72
DR004332	DS004332	D048147	211	08/21/72 - 10/13/72
DR004333	DS004333	D048148	388	10/20/72 - 02/02/73
DR004334	DS004334	D048149	276	02/15/73 - 05/15/73
DR004335	DS004335	D048150	144	05/16/73 - 06/20/73
DR004336	DS004336	D048151	156	06/21/73 - 07/28/73
DR004337	DS004337	D048152	196	07/29/73 - 09/24/73

DR#	DS#	DD#	FILES	TIME SPAN	
DR004338	DS004338	D048153	150	09/25/73 - 11/02/73	
DR004339	DS004339	D048154	168	11/03/73 - 12/14/73	
DR004340	DS004340	D048155	164	12/13/73 - 03/03/74	
DR004341	DS004341	D048156	379	03/04/74 - 05/22/74	
DR004342	DS004342	D048157	1-235	05/23/74 - 07/20/74	
		D048158	236-259	07/21/74 - 07/27/74	(a)
DR004343	DS004343	D048159	1-357	07/29/74 - 10/30/74	
		D048160	358-362	10/31/74 - 11/01/74	
DR004344	DS004344	D048161	1-534	11/02/74 - 04/14/75	(b)
		D048162	535-570	04/15/75 - 04/24/75	
DR004345	DS004345	D048163	1-327	04/26/75 - 08/14/75	
		D048164	328-340	11/14/75 - 11/16/75	
DR004346	DS004346	D048165	310	08/19/75 - 11/01/75	
DR004347	DS004347	D048166	445	11/02/75 - 02/27/76	
DR004348	DS004348	D048167	1-863	02/28/76 - 11/13/76	
		D048168	864-1159	07/08/78 - 09/26/78	
DR004349	DS004349	D056398	1-685	12/24/76 - 06/21/77	
		D056399	686-1014	08/12/77 - 11/05/77	
DR004350	DS004350	D056400	1-883	11/06/77 - 07/07/78	
		D056401	884-1180	07/08/78 - 09/26/78	
DR004351	DS004351	D056402	1-997	09/27/78 - 09/07/79	
		D056403	998-1325	09/08/79 - 11/26/79	
DR004352	DS004352	D056404	1-916	09/27/78 - 08/14/79	
		D056405	917-1203	08/15/79 - 09/28/80	
DR004353	DS004353	D056406	1-911	09/29/80 - 05/08/81	
		D056407	912-993	05/09/81 - 05/30/81	

DR#	DS#	DD#	FILES	TIME SPAN
DR004354	DS004354	D078780	947	05/31/81 - 01/27/82 (c)
DR004355	DS004355	D078781	192	02/24/82 - 04/13/82
DR004356	DS004356	D078782	999	01/01/83 - 09/17/83
DR004357	DS004357	D078783	136	10/15/83 - 11/17/83
DR004358	DS004358	D078784	999	01/01/84 - 09/05/84
DR004359	DS004359	D078785	999	01/01/85 - 10/01/85
DR004360	DS004360	D078786	999	01/01/86 - 10/03/86
DR004361	DS004361	D080574	1530	07/22/86 - 09/22/87
DR004362	DS004362	D080575	1279	01/01/88 - 12/31/88
DR004363	DS004363	D080576	1404	01/01/89 - 12/31/89
DR006119	DS006119	D104164	412	01/01/90 - 05/06/90
DR006120	DS006120	D104165	728	05/07/90 - 11/01/91
DR006121	DS006121	D104166	885	12/06/91 - 12/11/93

(a) FILE 25 WAS MISSING
(b) FILES 341, 533-34 WERE BAD
(c) FILES 948-99 WERE BAD

PIONEER 11

EUV EDR PHOTON EMISSION DATA

73-019A-06A PSPA-00277

THIS DATA SET HAS BEEN RESTORED. THERE WERE ORIGINALLY 58 9-TRACK, 6250 BPI TAPES. EACH ORIGINAL TAPE CONTAINED AN IBM STANDARD LABEL BEFORE AND AFTER EACH PATTERN OF THREE BCD FILES AND ONE BINARY FILE WHICH RUN CONTINUOUSLY THROUGHOUT THE TAPE. WHEN THE TAPES WERE RESTORED THE LABELS WERE REMOVED BUT THE PATTERN OF THREE BCD FILES AND ONE BINARY FILE WERE CONVERTED TO THREE ASCII FILES AND ONE BINARY FILE. THERE ARE 42 RESTORED TAPES, 3 OF THESE TAPES ARE WAITING TO BE USED WHEN THE REPLACEMENT TAPES ARRIVE. THE TAPES D080580 AND D080584 WERE BAD, REPLACEMENTS FOR THESE TAPES HAVE BEEN ORDERED. THE DR TAPES ARE 3480 CARTRIDGES AND THE DS TAPES ARE 9-TRACK, 6250 BPI. THE ORIGINAL TAPES WERE CREATED ON AN IBM 360 COMPUTER AND WERE RESTORED ON AN IBM 9021 COMPUTER. THE DR AND DS NUMBERS ALONG WITH THE CORRESPONDING D NUMBERS AND TIME SPANS ARE AS FOLLOWS:

DR#	DS#	DD#	FILES	TIME SPAN
DR004690	DS004690	D057295	154	04/06/73 - 05/20/73
DR004691	DS004691	D057296	66	05/21/73 - 06/07/73
DR004692	DS004692	D057297	61	06/07/73 - 06/23/73
DR004693	DS004693	D057298	1-59	06/23/73 - 07/08/73
		D057299	60-65	07/09/73 - 07/10/73
DR004694	DS004694	D048169	85	07/12/73 - 08/07/73
DR004695	DS004695	D048170	99	08/06/73 - 09/01/73
DR004696	DS004696	D048171	114	09/01/73 - 10/03/73
DR004697	DS004697	D048172	1-309	10/05/73 - 12/22/73
		D048173	310-346	12/23/73 - 12/31/73
DR004698	DS004698	D048174	1-483	01/01/74 - 05/02/74
		D048175	484-540	05/03/74 - 05/16/74

DR#	DS#	DD#	FILES	TIME SPAN
DR004699	DS004699	D048176	1-345	05/07/74 - 08/11/74
		D048177	346-384	08/12/74 - 08/22/74
DR004700	DS004700	D048178	1-251	08/22/74 - 10/24/74
		D048179	252-261	10/28/74 - 10/26/74
DR004701	DS004701	D048180	106	10/27/74 - 11/16/74
DR006166	DS006166	D048181	158	11/17/74 - 12/06/74
DR006167	DS006167	D048182	98	12/07/74 - 12/20/74
DR006168	DS006168	D048183	248	12/21/74 - 02/19/75
DR006169	DS006169	D048184	1-511	02/21/75 - 07/01/75
		D048185	512-545	07/02/75 - 07/10/75
DR006170	DS006170	D048186	1-361	07/11/75 - 10/08/75
		D048187	362-371	10/09/75 - 10/11/75
DR006171	DS006171	D048188	264	10/12/75 - 12/28/75
DR006172	DS006172	D048189	1-496	12/29/75 - 05/02/76
		D048190	497-577	05/03/76 - 05/24/76
DR006173	DS006173	D048191	1-686	05/25/76 - 11/14/76
		D060863	687-764	11/15/76 - 12/04/76
DR006174	DS006174	D060864	1-418	12/05/76 - 03/17/77
		D060865	419-460	03/18/77 - 03/28/77
DR006175	DS006175	D060866	1-551	03/29/77 - 08/16/77
		D060867	552-612	08/17/77 - 09/02/77
DR006176	DS006176	D060868	1-743	09/02/77 - 03/06/78
		D060869	744-998	03/07/78 - 05/09/78
DR006177	DS006177	D060870	1-929	05/11/78 - 01/08/79
		D060871	930-1095	01/09/79 - 02/23/79
DR006178	DS006178	D060872	1-683	02/24/79 - 08/22/79
		D060873	684-742	08/22/79 - 09/03/79
DR006179	DS006179	D060874	1-627	09/01/79 - 02/03/80
		D060875	628-781	02/04/80 - 03/13/80
DR006180	DS006180	D060876	1-647	03/14/80 - 09/10/80
		D060877	648-947	09/11/80 - 11/24/80
DR006181	DS006181	D060878	1-600	11/26/80 - 04/19/81
		D060879	602-744	04/20/81 - 05/23/81

73-019A-06A

DR#	DS#	DD#	FILES	TIME SPAN
DR006182	DS006182	D078787	872	05/30/81 - 01/04/82
DR006183	DS006183	D080577	197	01/05/82 - 02/23/82
DR006184	DS006184	D080578	376	02/24/82 - 05/30/82
DR006185	DS006185	D080579	843	05/31/82 - 01/04/83
DR006186	DS006186	D080581	1582	08/30/83 - 10/09/84
DR006187	DS006187	D080582	1445	10/10/84 - 12/31/85
DR006188	DS006188	D080583	455	01/02/86 - 05/06/86
DR006189	DS006189	D080585	1805	07/18/88 - 12/30/89
DR006190	DS006190	D104167	790	01/01/90 - 12/29/90
DR006191	DS006191	D104169	161	04/02/91 - 11/11/91
DR006192	DS006192	D104168	578	11/29/91 - 05/26/93

REQ. AGENT	RAND NO.	ACQ. AGENT
GLS	V0138	WSC

PIONEER 10 & 11

EUV EDR PHOTON EMISSION DATA

72-012A-06A
73-019A-06A

This data set catalog consists of ~~83~~ 98 tapes. Each tape is 6250 BPI, 9 track, binary and is multi-filed. The original tapes were created on an IBM 360 computer. The original tapes were duped on the 3081 and in the process created more output tapes then input tapes. All the tapes are IBM Standard Label, formatted tapes, all the label files are written in EBCDIC. The number of files indicated on the tapes are the number of data files on each tape. The following pages list the D#'S, number of data files per tape, the serial number of each tape and the time span of each tape.

PIONEER 10/EUV EDR PHOTON EMISSION DATA 72-~~102A~~ 012A-06A

D#	SERIAL#	NO. OF FILES	TIME SPAN
D-54477	APF001	180	03/11/72 - 05/01/72
D-54478	APF002	68	05/02/72 - 05/23/72
D-54479	APF003	72	05/24/72 - 06/11/72
D-54480	APF004	64	06/12/72 - 06/30/72
D-54481	APF005	76	07/03/72 - 07/19/72
D-48146	APF006	124	07/20/72 - 08/20/72
D-48147	APF007	211	08/21/72 - 10/13/72
D-48148	APF008	388	10/20/72 - 02/02/73
D-48149	APF009	276	02/15/73 - 05/15/73
D-48150	APF010	144	05/16/73 - 06/20/73
D-48151	APF011	156	06/21/73 - 07/28/73
D-48152	APF012	196	07/29/73 - 09/24/73
D-48153	APF013	150	09/24/73 - 11/02/73
D-48154	APF014	168	11/03/73 - 12/14/73
D-48155	APF015	164	12/13/73 - 03/03/74
D-48156	APF016	379	03/04/74 - 05/22/74
D-48157	APF017	235	05/23/74 - 07/20/74
D-48158	APF017	25	07/21/74 - 07/27/74
D-48159	APF018	357	07/29/74 - 10/30/74
D-48160	APF018	5	10/31/74 - 11/01/74
D-48161	APF019	534	11/02/74 - 04/14/75
D-48162	APF019	39	04/15/75 - 04/24/75
D-48163	APF020	327	04/25/75 - 08/14/75
D-48164	APF020	13	08/14/75 - 08/17/75
D-48165	APF021	~~297~~ 310	08/18/75 - 11/01/75
D-48166	APF022	445	11/02/75 - 02/27/76
D-48167	APF023	863	02/28/76 - 11/12/76
D-48168	APF023	160	11/13/76 - 12/23/76
D-56398	APF024	~~712~~ 685	12/24/76 - 08/10/77
D-56399	APF024	329	08/11/77 - 11/05/77
D-56400	APF025	883	11/06/77 - 07/07/78
D-56401	APF025	297	07/08/78 - 09/26/78
D-56402	APF026	997	09/27/78 - 09/06/79
D-56403	APF026	327	09/07/79 - 11/26/79
D-56404	APF027	916	11/27/79 - 07/24/80
D-56405	APF027	207	07/24/80 - 09/28/80
D-56406	APF028	912	09/29/80 - 05/07/81
D-56407	APF028	88	05/08/81 - 05/30/81
D-78780	C-27093	2997	5/31/81 - 1/11/82
D-78781	C-27094	576	2/24/82 - 4/13/82
D-78782	C-27095	2997	1/1/83 - 9/17/83
D-78783	C-27096	408	1/15/83 - 11/17/83
D-78784	C-27097	2997	1/1/84 - 9/5/84
D-78785	C-27098	2997	1/1/85 - 10/1/85
D-78786	C-27099	2997	1/1/86 - 10/3/86

PIONEER 11/ EUV PHOTON EMISSION DATA 73-019A-06A

D#	SERIAL#	# OF FILES	TIME SPAN
D-57295	APG001	154	04/06/73 - 05/20/73
D-57296	APG002	66	05/20/73 - 06/07/73
D-57297	APG003	61	06/08/73 - 06/23/73
D-57298	APG004	59	06/24/73 - 07/08/73
D-57299	APG004	5	07/09/73 - 07/10/73
D-48169	APG005	85	07/12/73 - 08/07/73
D-48170	APG006	99	08/07/73 - 09/01/73
D-48171	APG007	122	09/02/73 - 10/04/73
D-48172	APG008	309	10/05/73 - 12/22/73
D-48173	APG008	36	12/23/73 - 12/31/73
D-48174	APG009	483	01/01/74 - 05/02/74
D-48175	APG009	56	05/03/74 - 05/15/74
D-48176	APG010	345	05/07/74 - 08/11/74
D-48177	APG010	41	08/12/74 - 08/22/74
D-48178	APG011	152	08/23/74 - 10/24/74
D-48179	APG011	9	10/25/74 - 10/26/74
D-48180	APG012	106	10/27/74 - 11/16/74
D-48181	APG013	158	11/17/74 - 12/06/74
D-48182	APG014	98	12/07/74 - 12/20/74
D-48183	APG015	248	12/21/74 - 02/19/75
D-48184	APG016	511	02/21/75 - 07/01/75
D-48185	APG016	37	07/02/75 - 07/10/75
D-48186	APG017	361	07/11/75 - 10/08/75
D-48187	APG017	10	10/07/75 - 10/11/75
D-48188	APG018	264	10/12/75 - 12/28/75
D-48189	APG019	496	12/29/75 - 05/02/76
D-48190	APG019	81	05/03/76 - 05/24/76
D-48191	APG020	686	05/25/76 - 11/14/76
D-60863	APG020	77	11/15/76 - 12/04/76
D-60864	APG021	418	12/05/76 - 03/17/77
D-60865	APG021	41	03/18/77 - 03/28/77
D-60866	APG022	551	03/29/77 - 08/16/77
D-60867	APG022	61	08/17/77 - 09/02/77
D-60868	APG023	743	09/02/77 - 03/06/78
D-60869	APG023	255	03/07/78 - 05/09/78
D-60870	APG024	929	05/11/78 - 01/08/79
D-60871	APG024	166	01/09/79 - 02/23/79
D-60872	APG025	683	02/24/79 - 08/22/79
D-60873	APG025	60	08/22/79 - 08/31/79
D-60874	APG026	627	09/01/79 - 02/03/80
D-60875	APG026	153	02/04/80 - 03/13/80
D-60876	APG027	647	03/14/80 - 09/10/80
D-60877	APG027	300	09/11/80 - 11/24/80
D-60878	APG028	600	11/26/80 - 04/19/81
D-60879	APG028	144	04/20/81 - 05/23/81
D-78787	C-27100	2616	5/30/81 - 1/4/82

REQ. AGENT	ACQ. AGENT
CMW	NJS

D#	VOLUME LABEL	NO OF FILES	TIME SPAN
D-080577	APG030	590	01/05/82 - 02/05/82
D-080578	PG031	1127	02/06/82 - 04/06/82
D-080579	PG032	2528	04/07/82 - 01/04/83
D-080580	(tape missing		
D-080581	PG034	4745	08/30/83 - 10/09/84
D-080582	PG035	4334	10/10/84 - 12/31/85
D-080583	PG036	1364*	01/02/86 - 05/06/86
D-080584	(tape missing)		
D-080585	PG038	5414	07/18/88 - 12/30/89

* Invalid label encountered at file 16

extreme Ultravio & Photomet. data on magnetic tape

"T" #'s

SPACE SCIENCES INSTITUTE

TELEPHONE: (213) 741-5484

March 13, 1981

National Space Science Data Center
Acquisition and Analysis Branch, Code 601
Goddard Space Flight Center
Greenbelt, Maryland 20771

Subject: Submission of Data/Documentation to NSSDC
NSSDC ID #72-012A-06 & 73-019A-06

We have prepared documentation and data for submission to NSSDC. Dr. D. L. Judge, who is the Principle Investigator for the ultraviolet experiments aboard the Pioneer 10/11 spacecraft, has asked me to send you the data to be archived at NSSDC. I am employed by Dr. Judge at the Earth and Space Sciences Institute and it is my responsibility for maintaining the Pioneer project data base here at the University of Southern California

A total of 54 digital magnetic tapes, containing data for the ultraviolet experiments, have been prepared. We plan to make several shipments of these tapes to NSSDC and this will be our first shipment of 10 digital magnetic tapes. The tapes are:

Tape Name	Pioneer S/C	Period Covered (DOY/YR)		
APF001	10	71/1972	-	122/1972
APF002	10	123/1972	-	144/1972
APF003	10	145/1972	-	163/1972
APF004	10	164/1972	-	182/1972
APF005	10	185/1972	-	201/1972
APG001	11	96/1973	-	140/1973
APG002	11	140/1973	-	158/1973
APG003	11	159/1973	-	174/1973
APG004	11	175/1973	-	191/1973
APG005	11	193/1973	-	219/1973

All tapes are IBM Standard Label recorded at 6250 BPI. Complete documentation for the tapes' contents has been included in a separate letter. We would appreciate it if you would copy these tapes and return the original to us:

Professor D. L. Judge
Earth and Space Sciences Institute
University of Southern California
Stauffer Hall of Science, Rm. #274
Los Angeles, California 90007

PIONEER 10

TAPE NAME	PERIOD COVERED (DOY/YR)
APF 006	202/72 - 233/72
APF 007	234/72 - 287/72
APF 008	294/72 - 33/73
APF 009	46/73 - 135/73
APF 010	136/73 - 171/73
APF 011	172/73 - 209/73
APF 012	210/73 - 267/73
APF 013	268/73 - 306/73
APF 014	307/73 - 348/73
APF 015	347/73 - 62/74
APF 016	63/74 - 140/74
APF 017	143/74 - 208/74
APF 018	210/74 - 305/74
APF 019	307/74 - 114/75
APF 020	116/75 - 229/75
APF 021	230/75 - 305/75
APF 022	307/75 - 58/76
APF 023	59/76 - 358/76
APF 024	359/76 - 309/77
APF 025	310/77 - 269/78
APF 026	270/78 - 330/79
APF 027	331/79 - 272/80
APF 028	273/80 - 150/81

PIONEER 11

TAPE NAME	PERIOD COVERED (DOY/YR)
APG 006	213/73 - 244/73
APG 007	245/73 - 277/73
APG 008	278/73 - 365/73
APG 009	1/74 - 136/74
APG 010	127/74 - 234/74
APG 011	235/74 - 299/74
APG 012	301/74 - 320/74
APG 013	321/74 - 340/74
APG 014	341/74 - 354/74
APG 015	355/74 - 50/75
APG 016	52/75 - 191/75
APG 017	192/75 - 284/75
APG 018	285/75 - 362/75
APG 019	363/75 - 145/76
APG 020	146/76 - 339/76
APG 021	340/76 - 87/77
APG 022	88/77 - 245/77
APG 023	245/77 - 129/78
APG 024	131/78 - 54/79
APG 025	55/79 - 246/79
APG 026	244/79 - 73/80
APG 027	74/80 - 329/80
APG 028	331/80 - 150/81

UNIVERSITY OF SOUTHERN CALIFORNIA
UNIVERSITY PARK
LOS ANGELES, CALIFORNIA 90007

DEPARTMENT OF PHYSICS

March 26, 1982

NATIONAL SPACE SCIENCE DATA CENTER
Acquisition and Analysis Branch, Code 601
Goddard Space Flight Center
Greenbelt, Maryland 20771

Attention : MR. RALPH POST

Subject : DATA SUBMISSION TO NSSDC
NSSDC ID #72-0123A-06 and 73-019A-06

We have prepared data for submission to NSSDC. Dr. D.L. Judge, who is the Principal Investigator for the ultraviolet photometer experiment aboard the Pioneer 10/11 Spacecraft, has asked me to send you the remainder of our data tapes to be archived at NSSDC. A total of 46 digital magnetic tapes have been prepared and shipped to you in five boxes. All tapes are IBM Standard Label recorded at 6250 BPI. Complete documentation for the tapes' contents is given in our original document submitted to NSSDC on March 30, 1981. A list of the data tapes and the time period covered by each tape is also enclosed. In addition, computer printout of data plots and their description have been enclosed.

If there are any additional questions regarding the data submission, please contact me :

CALLAGHAN
Steve~~n Askew~~
Center for → Space Sciences
University of Southern California
Stauffer Hall of Science, Rm. #274
Los Angeles, California 90007
Telephone : (213) 743-2050

Sincerely,

Steven Askew

STEVEN ASKEW

SA:sbgs

Description of Pioneer 10/11 USC Ultraviolet Data Plots

The data presented in this plot is output generated by the computer program listed in the document, "Operational Characteristics and Experimental Data Record Format for the University of Southern California Pioneer 10 & 11 Ultraviolet Photometer Experiments", submitted to NSSDC in March, 1981. We have included the first section of this document to provide a description of the experiment and the data.

Plot Description:

The data plot gives a time averaged counting rate vs. clock angle for the two channel photometer. The title contains:

Pss Pass: pppp DOY:ddd mmm dd,yyyy

where:

ss = 10 for Pioneer 10

11 for Pioneer 11

pppp = pass number or number of days since launch

ddd = the day of year

mmm = month

dd = date

yyyy = year

The y-axis represents the average count rate in counts per second, while the x-axis gives the clock angle in degrees. At the bottom of the plot, the following is listed:

CHAN: H - hydrogen or λ_L

He - Helium or λ_S

The channel of the instrument

INTERVAL TIMES: Time period for which the average is taken. Given in hours: minutes: seconds

MIN
AVG : Values for corresponding count rate given in counts per second
MAX

Min
CLOCK : Clock angle where (minimum/maximum) count rate occurs.
Max

#OBS : Number of observations made by the instrument

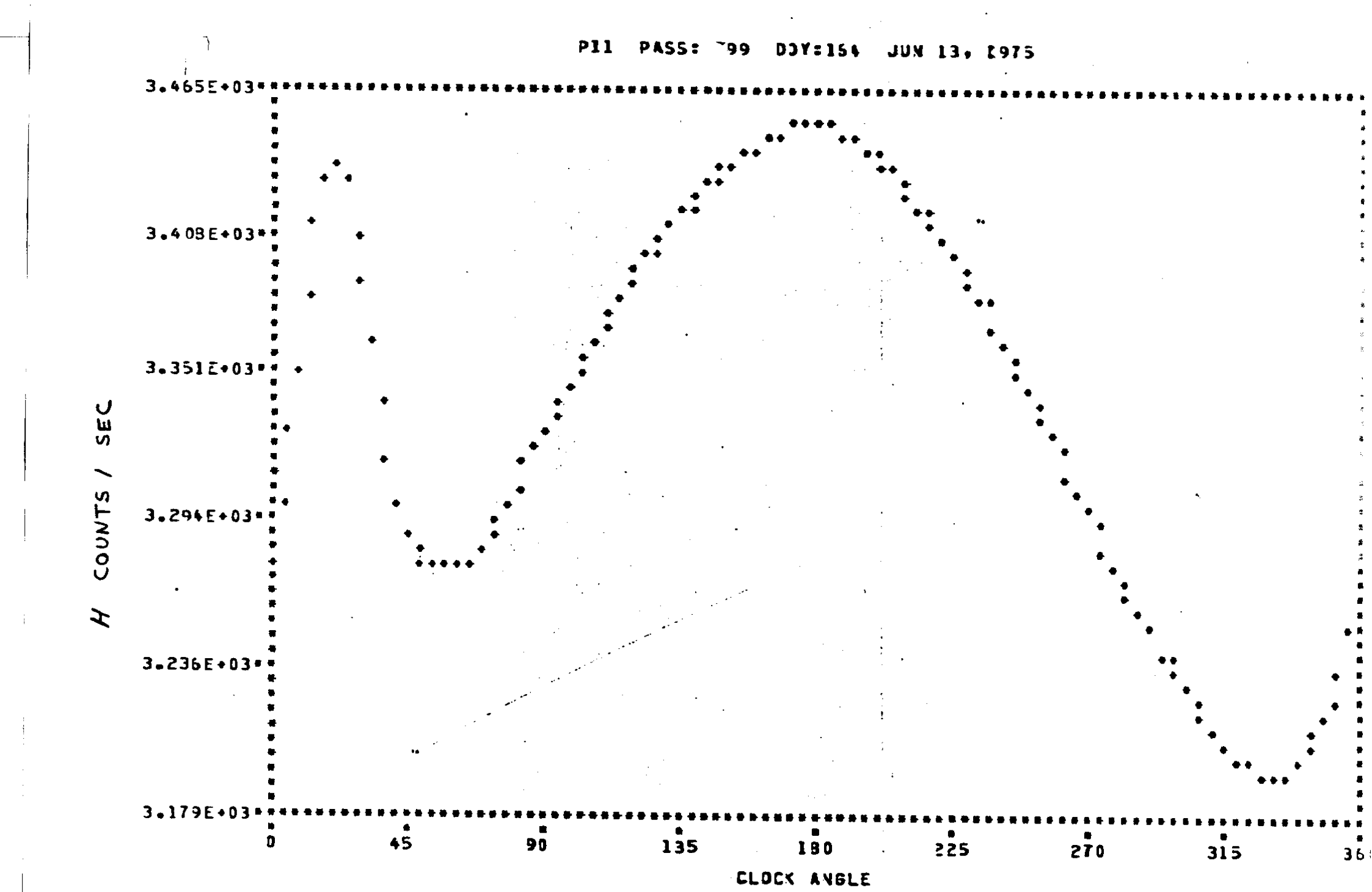

INTERVAL TIMES

START	END	TOTAL
00:01:01	23:18:01	03:49:09

COUNTS PER SECOND

MIN	AVG	MAX
3.194E+03	3.340E+03	3.451E+03

CLOCK ANGLE OF

MIN	MAX	# 035
333.23	175.73	32157.

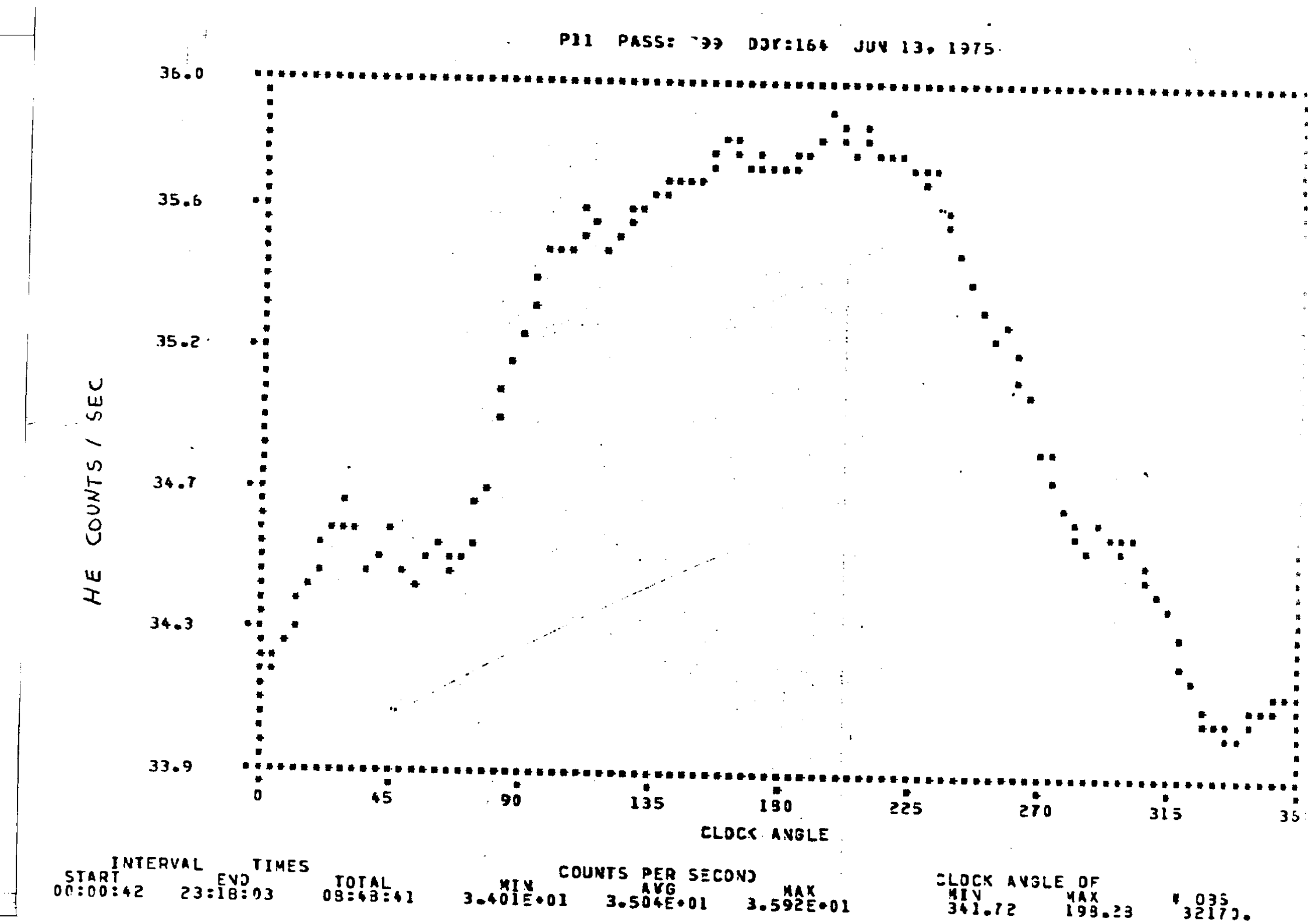

INTERVAL TIMES

START	END	TOTAL
00:00:42	23:18:03	08:48:41

COUNTS PER SECOND

MIN	AVG	MAX
3.401E+01	3.504E+01	3.592E+01

CLOCK ANGLE OF

MIN	MAX	# 035
341.72	198.23	32170.

I. INTRODUCTION

A. EXPERIMENT DESCRIPTION

The ultraviolet photometer on board Pioneer 10/11 covers two broad spectral regions as shown in Fig. 1 (Judge et al. 1976).[1] The short wavelength (λ_S) band is sensitive only to emissions shortward of about 800 Å, and includes the 584 Å resonance line of helium. the region of sensitivity of the long-wavelength (λ_L) channel includes the hydrogen resonance line at 1216 Å. The instrument design was based on the expected dominance of hydrogen and helium gases in the Jovian, Saturian and interplanetary glow. Analysis of the interplanetary UV data allows one to determine the physical parameters of the interplanetary H and He gases and the "background" radiation. The instrument, because of its broad band response, can also detect emissions from stars and high temperature plasma shortward of $\sim$ 1400 Å, a region for which the Earth's atmosphere is opaque. The measurement of a star's UV emission provides data not only on its thermal characteristics, but the extinction coefficient of the intervening medium, as well. The ability to observe high temperature plasma emission for $\lambda < 800$ Å in the λ_S channel is particularly useful for detecting shock excited atomic ions.

The photometer field of view is limited by a mechanical collimator whose optical axis is oriented at an angle $\theta_o = 20°$ with respect to the spacecraft axis (Fig. 2). The scanning motion that results from spacecraft rotation sweeps the field of view over the surface of a 40° cone having its vertex at the spacecraft and its cone axis oriented along the spin axis. The spin axis of the spacecraft is parallel to the S/C-earth line.

The weight, power, and reliability constraints necessitated the choice of a simple photometric system for the ultraviolet measurements. The Pioneer ultraviolet experiment uses the transmission properties and photoelectric

---

[1]Judge, D. L., R. W. Carlson, F. M. Wu and U. G. Harmann, 1976, in "Jupiter", edited by T. Gehrels, pp. 1068, University of ARizona Press, Tucson, Arizona.

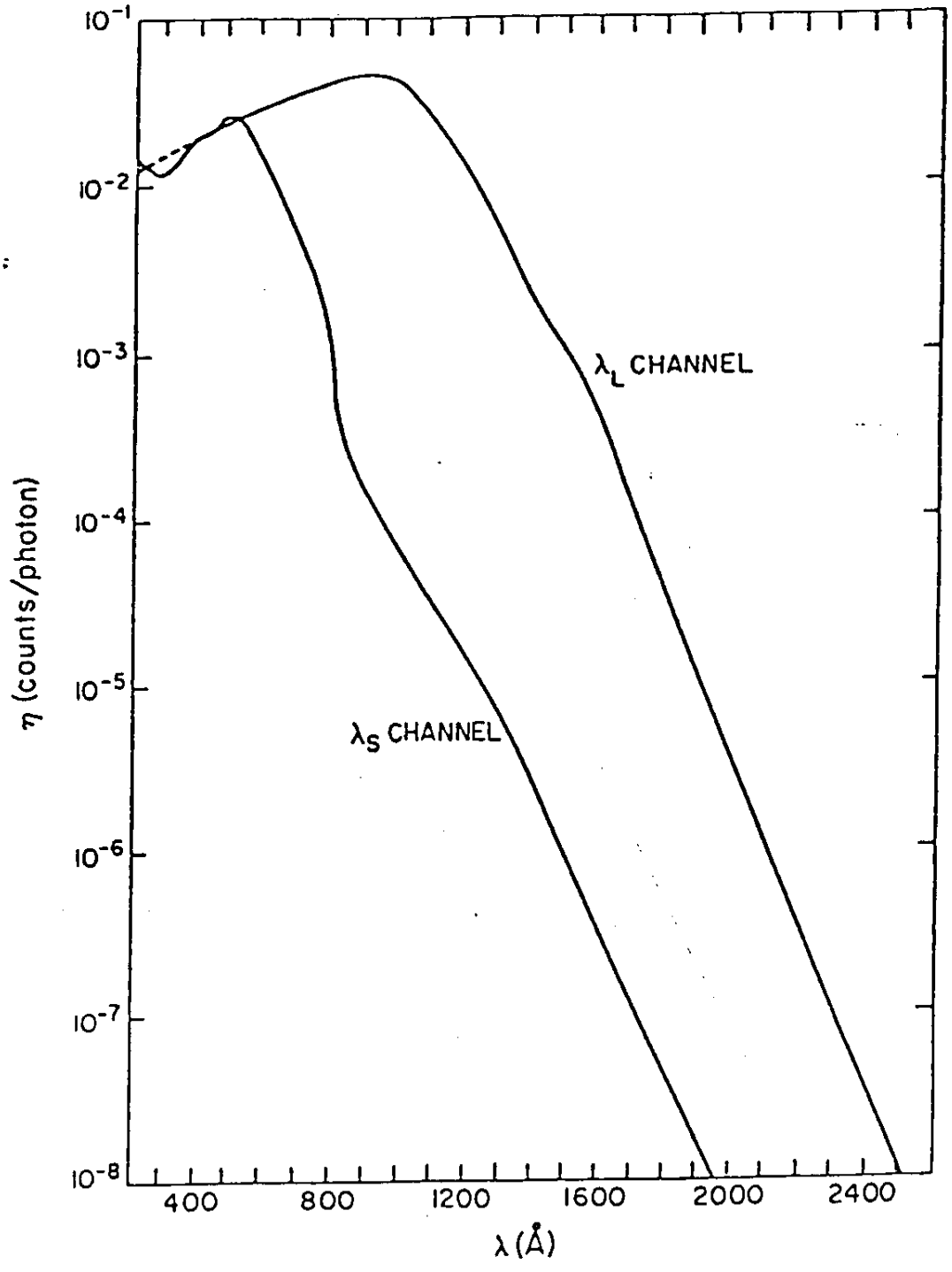

Figure 1. Spectral sensitivity of the two channel ultraviolet photometer of the University of Southern California on board both Pioneer 10 and 11.

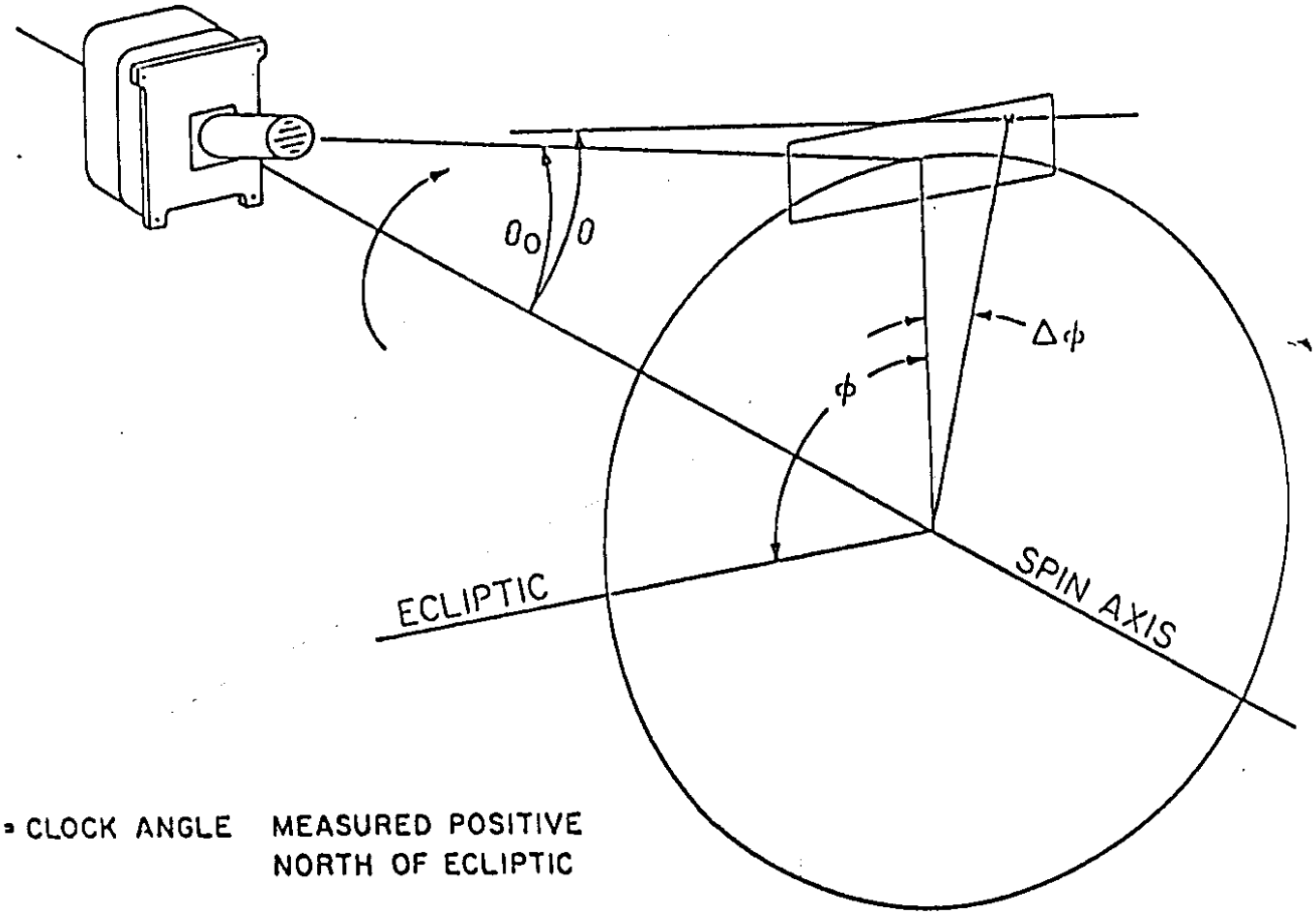

ϕ = CLOCK ANGLE MEASURED POSITIVE NORTH OF ECLIPTIC

θ = CONE ANGLE FIXED AT ~20°

Figure 2. Viewing geometry of the photometer. The optical axis of the photometer is at an angle ∿ 20° to the spin axis of the spacecraft. The angle ϕ is the clock angle relative to the ecliptic. The instantaneous field of view is normally 1° x 10°.

response of materials to measure intensities in the two spectral regions indicated above. A schematic diagram of the instrument is shown in Figure 3. Radiation transmitted through the mechanical collimator is incident upon a thin film filter through which short wavelength photons are transmitted. These photons strike a photocathode, producing photoelectrons which are accelerated through a 180 Volt potential into the input cone of a channel electron multiplier. The front surface of the filter is used as a photocathode with a second electron multiplier to detect the longer wavelength Lyman-α photons. The pulses of charge appearing at the anodes are amplified with charge amplifiers and passed to a discriminator. An electronic switch commutates between the two channels every two rolls of the spacecraft, approximately 25 sec. The pulses are accumulated over the frame period of the spacecraft telemetry system (3/8 sec at Jupiter encounter). The accumulated counts are logarithmically compressed to 9 bits and sampled by the telemetry system for transmission.

A cover was placed over the entrance aperture to insure against dust particles entering the instrument and to protect the thin film filter from escaping air currents during launch. The cover was deployed 6 days after launch.

The instrument parameters are presented in Table 1.

The experiment data records contain both attitude and roll data, sufficient to calculate the average photometer pointing direction for each integration to within a few degrees. Spacecraft trajectory data can be obtained from Supplementary Experiment Data Records (SEDR) supplied by the NASA Ames Research Center.

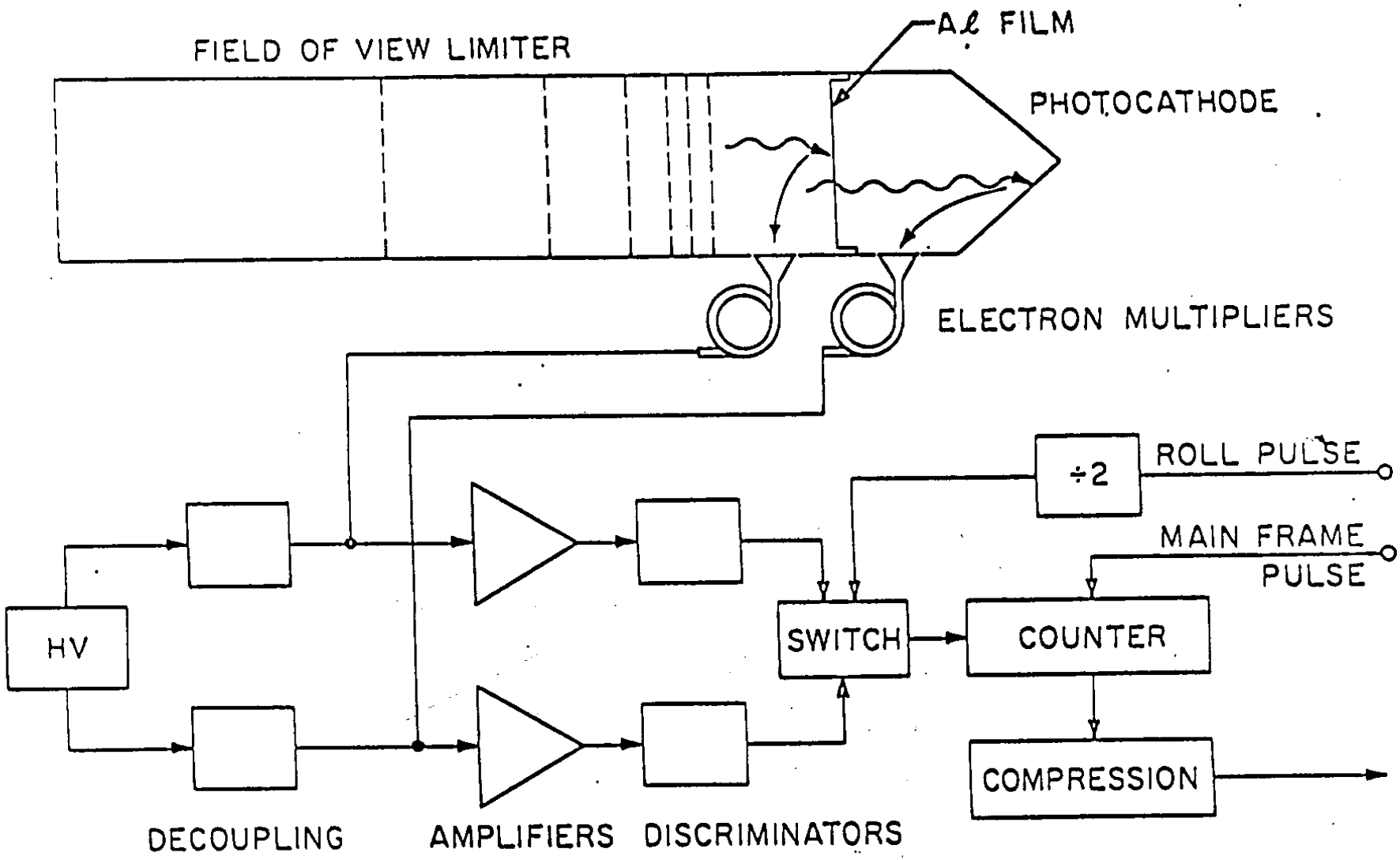

Figure 3. Schematic diagram of the UV instrument

TABLE 1

USC XUV PHOTOMETER INSTRUMENT PARAMETERS

Instrument Type:	Two channel XUV Photometer
Channels:	λ_L channel for emissions with $\lambda < 1400$ Å; λ_S channel for emissions with $\lambda < 800$ Å.
Field of View (FWHM):	1.15° x 9.3° (3.26×10^{-3} sterad)
Filter:	Thin film aluminum filter
Entrance Area:	1.67 cm^2
Geometric Thruput:	434 photons sec^{-1} $Rayleigh^{-1}$
Sensitivity:	4.9 counts/sec-R (Lyman-α) 7.2 counts/sec-R (HeI λ584 Å)
Photocathode:	Aluminum (Lyman-α), LiF (He)
Sensors:	Bendix model 4028 channeltrons (2)
Weight:	650 grams
Power:	650 mW
Data Storage:	19 bits, compressed to 9 bits floating point
Electronics:	Pulse counting electronics; 3.75 kV high voltage supply; Low-voltage power conditioning unit; Compressed-storage logic; Piston actuator--Dust cover removal system.

OPERATIONAL CHARACTERISTICS AND EXPERIMENT DATA RECORD FORMAT

FOR THE

UNIVERSITY OF SOUTHERN CALIFORNIA PIONEER 10 & 11 ULTRAVIOLET PHOTOMETER EXPERIMENTS

March, 1981

TABLE OF CONTENTS

I. INTRODUCTION

A. Description and Operation of the Instruments

B. List of Reports

C. Data Decompression

E. Instrument Timing

F. Channel and Roll Angle Identification

II. PHYSICAL FORM OF THE DATA

A. Introduction

B. Standard Label Format

C. Tape Maps for Pioneer 10

D. Tape Maps for Pioneer 11

III. EXPERIMENT DATA RECORD FORMATS

A. File 1 - Logistics File

B. File 2 - Command File

C. File 3 - Spacecraft Attitude Data

D. File 4 - Experiment Data

E. Binary Data Representation

IV. A SAMPLE DATA PROCESSING PROGRAM FOR PIONEER USC/UV DATA

A. Introduction

B. Listing of the Computer Program

C. Definitions of Computer Program Variables

LIST OF FIGURES

LIST OF TABLES

I. INTRODUCTION

A. EXPERIMENT DESCRIPTION

The ultraviolet photometer on board Pioneer 10/11 covers two broad spectral regions as shown in Fig. 1 (Judge et al. 1976).[1] The short wavelength (λ_S) band is sensitive only to emissions shortward of about 800 Å, and includes the 584 Å resonance line of helium. the region of sensitivity of the long-wavelength (λ_L) channel includes the hydrogen resonance line at 1216 Å. The instrument design was based on the expected dominance of hydrogen and helium gases in the Jovian, Saturian and interplanetary glow. Analysis of the interplanetary UV data allows one to determine the physical parameters of the interplanetary H and He gases and the "background" radiation. The instrument, because of its broad band response, can also detect emissions from stars and high temperature plasma shortward of $\sim$ 1400 Å, a region for which the Earth's atmosphere is opaque. The measurement of a star's UV emission provides data not only on its thermal characteristics, but the extinction coefficient of the intervening medium, as well. The ability to observe high temperature plasma emission for $\lambda < 800$ Å in the λ_S channel is particularly useful for detecting shock excited atomic ions.

The photometer field of view is limited by a mechanical collimator whose optical axis is oriented at an angle $\theta_o = 20°$ with respect to the spacecraft axis (Fig. 2). The scanning motion that results from spacecraft rotation sweeps the field of view over the surface of a 40° cone having its vertex at the spacecraft and its cone axis oriented along the spin axis. The spin axis of the spacecraft is parallel to the S/C-earth line.

The weight, power, and reliability constraints necessitated the choice of a simple photometric system for the ultraviolet measurements. The Pioneer ultraviolet experiment uses the transmission properties and photoelectric

---

[1] Judge, D. L., R. W. Carlson, F. M. Wu and U. G. Harmann, 1976, in "Jupiter", edited by T. Gehrels, pp. 1068, University of ARizona Press, Tucson, Arizona.

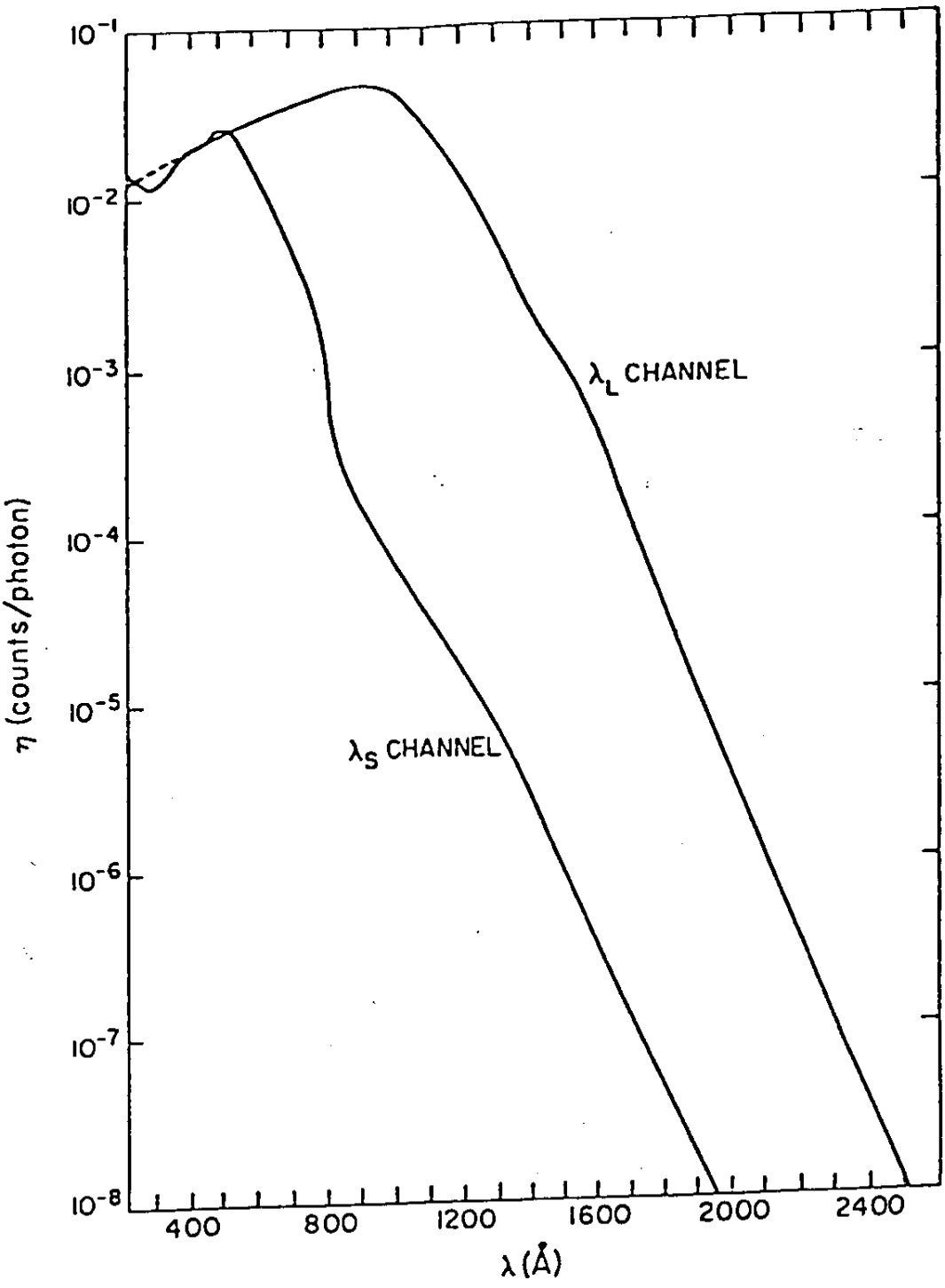

Figure 1. Spectral sensitivity of the two channel ultraviolet photometer of the University of Southern California on board both Pioneer 10 and 11.

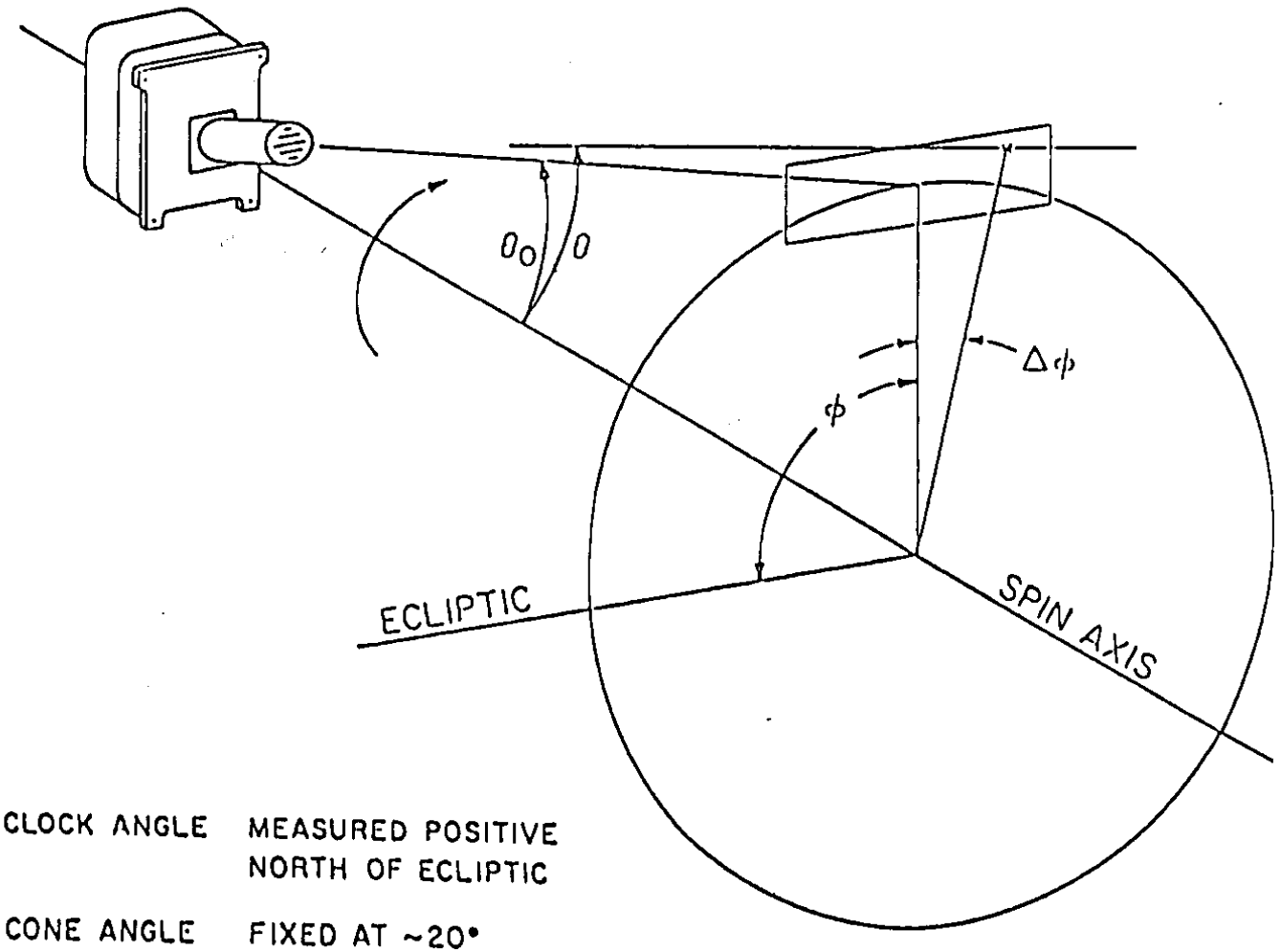

ϕ = CLOCK ANGLE MEASURED POSITIVE NORTH OF ECLIPTIC

θ = CONE ANGLE FIXED AT ~20°

Figure 2. Viewing geometry of the photometer. The optical axis of the photometer is at an angle ~ 20° to the spin axis of the spacecraft. The angle ϕ is the clock angle relative to the ecliptic. The instantaneous field of view is normally 1° x 10°.

response of materials to measure intensities in the two spectral regions indicated above. A schematic diagram of the instrument is shown in Figure 3. Radiation transmitted through the mechanical collimator is incident upon a thin film filter through which short wavelength photons are transmitted. These photons strike a photocathode, producing photoelectrons which are accelerated through a 180 Volt potential into the input cone of a channel electron multiplier. The front surface of the filter is used as a photocathode with a second electron multiplier to detect the longer wavelength Lyman-α photons. The pulses of charge appearing at the anodes are amplified with charge amplifiers and passed to a discriminator. An electronic switch commutates between the two channels every two rolls of the spacecraft, approximately 25 sec. The pulses are accumulated over the frame period of the spacecraft telemetry system (3/8 sec at Jupiter encounter). The accumulated counts are logarithmically compressed to 9 bits and sampled by the telemetry system for transmission.

A cover was placed over the entrance aperture to insure against dust particles entering the instrument and to protect the thin film filter from escaping air currents during launch. The cover was deployed 6 days after launch.

The instrument parameters are presented in Table 1.

The experiment data records contain both attitude and roll data, sufficient to calculate the average photometer pointing direction for each integration to within a few degrees. Spacecraft trajectory data can be obtained from Supplementary Experiment Data Records (SEDR) supplied by the NASA Ames Research Center.

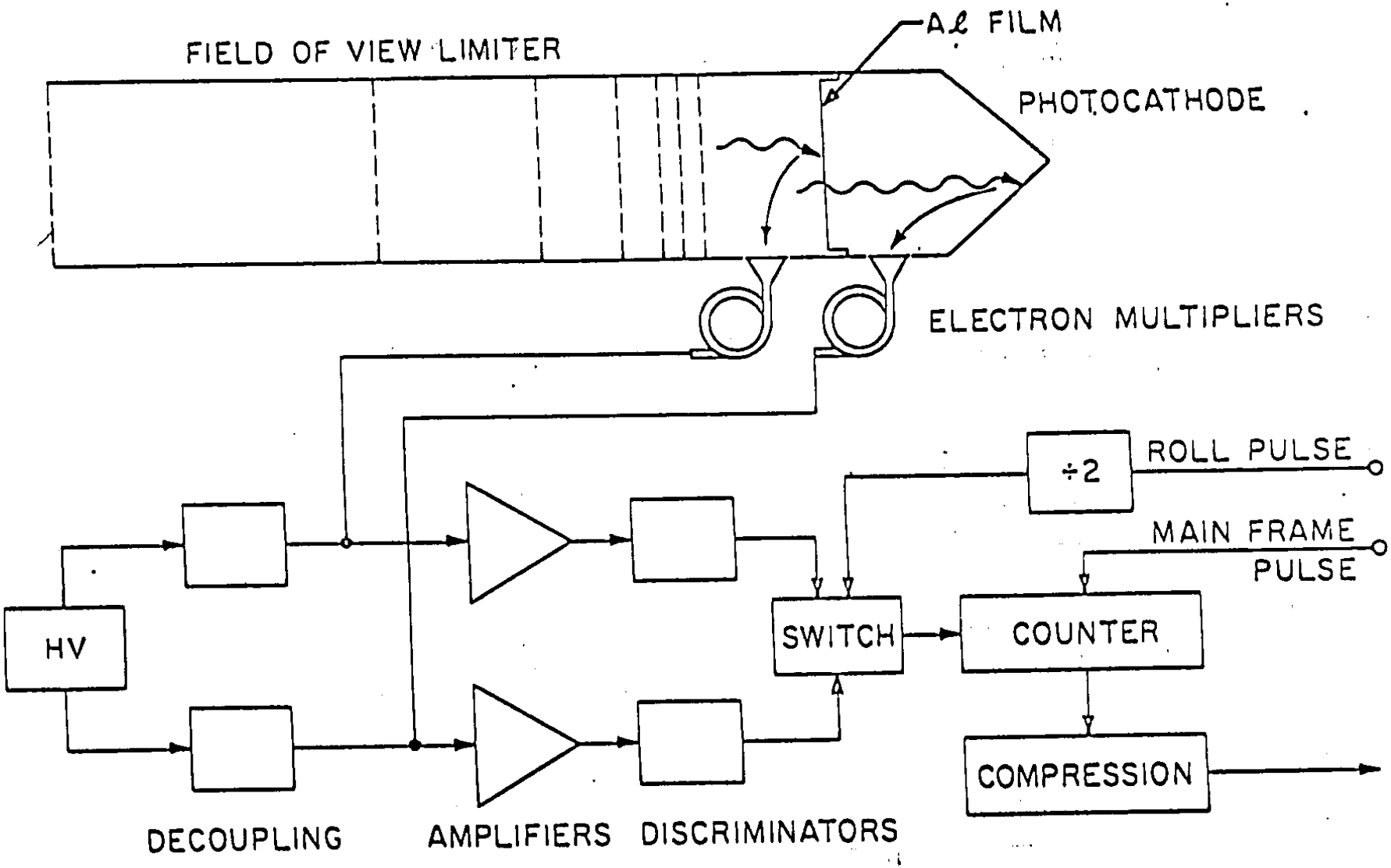

Figure 3. Schematic diagram of the UV instrument

TABLE 1

USC XUV PHOTOMETER INSTRUMENT PARAMETERS

Instrument Type:	Two channel XUV Photometer
Channels:	λ_L channel for emissions with $\lambda < 1400$ Å; λ_S channel for emissions with $\lambda < 800$ Å.
Field of View (FWHM):	1.15° x 9.3° (3.26×10^{-3} sterad)
Filter:	Thin film aluminum filter
Entrance Area:	1.67 cm^2
Geometric Thruput:	434 photons sec^{-1} $Rayleigh^{-1}$
Sensitivity:	4.9 counts/sec-R (Lyman-α) 7.2 counts/sec-R (HeI λ584 Å)
Photocathode:	Aluminum (Lyman-α), LiF (He)
Sensors:	Bendix model 4028 channeltrons (2)
Weight:	650 grams
Power:	650 mW
Data Storage:	19 bits, compressed to 9 bits floating point
Electronics:	Pulse counting electronics; 3.75 kV high voltage supply; Low-voltage power conditioning unit; Compressed-storage logic; Piston actuator--Dust cover removal system.

B. LIST OF REPORTS

The following reports have been prepared describing our Pioneer 10/11 observations and our theoretical results related to the analysis and interpretation of the Pioneer data. These include our work on the interplanetary physics as well as our study of the local environments of Jupiter and Saturn.

(a) "Pioneer 10 Observation of the Ultraviolet Glow in the Vicinity of Jupiter," Science 183, 317 (1974), D. L. Judge and R. W. Carlson.

This report describes the preliminary Pioneer 10 encounter results, particularly the first observation of helium in the atmosphere of Jupiter and the discovery of a hydrogen cloud orbiting Jupiter.

(b) "Initial Pioneer 10 Results on the Interplanetary and Interstellar Hydrogen and Helium Glow," Winter Meeting, A.P.S., Los Angeles, 1972, D. L. Judge, R. W. Carlson, K. Suzuki, and A. L. Morse.

The report deals with the interplanetary glow and the first positive evidence for interplanetary He emissions. The flow direction ($\alpha = 240°$) was discussed.

(c) "Pioneer 10 Ultraviolet Photometer Measurements of Interplanetary Hydrogen and Helium," Winter Meeting, AGU, San Francisco, 1973, D. L. Judge, R. W. Carlson, K. Suzuki, and A. L. Morse.

Additional parameters of the interplanetary gas were discussed, and the influence of self-reversed lines.

(d) "Results from the Pioneer 10 Ultraviolet Photometry Experiment," presented at the Palo Alto Meeting of the Division of Planetary Sciences, AAS, April 1974, R. W. Carlson and D. L. Judge. (Invited paper).

A more complete analysis of the Pioneer 10 encounter data was presented, particularly the Jupiter He/H_2 ratio and cloud dimensions.

(d) "Pioneer 10 Ultraviolet Photometer Observations at Jupiter," presented at the 55th Annual Spring Meeting of the AGU, Washington, D.C., April, 1974, R. W. Carlson and D. L. Judge. (Invited paper).

The Jupiter H_2/He ratio was presented along with the cloud results and a theory of the source and loss mechanisms involving the plasmasphere.

(f) "Possibility of OIIIλ304 Å Emissions in the Extreme Ultraviolet Airglow," Letter, J. Geophys. Res. 77, 6282 (1972), R. W. Carlson.

Based on terrestrial measurements, one of the possible components of the interplanetary glow observed by Pioneer 10 was thought to be due to He^{+}. This problem was examined and it was found that the interpretation of the terrestrial measurements can be confused by O^{++}.

(g) "Resonance Absorption of the Solar He λ584 Å Line by Telluric Helium," submitted to J. Geophys. Res., January, 1974, R. W. Carlson.

The problem of the solar He line profile is an extremely important one for the Pioneer measurements and was investigated using previous absorption measurements of the solar line.

(h) "Pioneer 10 Ultraviolet Photometer Observations at Jupiter Encounter," J. Geophys. Res. 79, 3623 (1974), D. L. Judge and R. W. Carlson.

The initial results from the Jupiter Encounter are analyzed in rather complete fashion.

(i) "Notes on the Density of Interplanetary Hydrogen," USC Internal Report (1974), R. W. Carlson.

The influence of the solar line shape on the interplanetary H trajectories and densities is analyzed.

(j) "Pioneer 10 Ultraviolet Photometer Observations of the Jovian Hydrogen Torus," presented at IAU Colloquium No. 28, Planetary Satellites, Ithaca, New York, August 1974, R. W. Carlson and D. L. Judge.

(k) "Preliminary Results from the Pioneer 11 Ultraviolet Photometer Experiment," presented at the Annual Fall Meeting of the AGU, San Francisco, Dec. 1974, D. L. Judge.

(l) "Atmospheres of Outer Planet Satellites," Exploration of the outer Solar System", MIT Press, 1975, R. W. Carlson.

(m) "Pioneer 10 Ultraviolet Photometer Observations of the Jovian Hydrogen Torus," Icarus, 29, 395, (1975), R. W. Carlson and D. L. Judge.

(n) "Pioneer 10 Observations of the Interplanetary Ultraviolet Glow," presented at Fall Meeting, Amer. Geophys. Union, San Francisco, 1975, K. Suzuki, R. W. Carlson, D. L. Judge and A. L. Morse.

(o) "The Profile and intensity of Solar HeI λ584 Å Line," presented at Fall Meeting, Amer. Geophys. Union, San Francisco, 1975, J. O. Maloy, R. W. Carlson, U. G. Hartmann, and D. L. Judge.

(p) "Pioneer 10 Upper Limits to Helium Ultraviolet Emissions from the Vicinity of Io," to be submitted to Icarus, R. W. Carlson and D. L. Judge.

(q) "Rocket-Borne Spectrometer for the Measurement of the Solar HeI 584λ A Line Shape," draft complete, USC Internal Report, J. O. Maloy, R. W. Carlson, U. G. Hartmann and D. L. Judge.

(r) "Design of a Rocket-Borne Radioactive-Source Ionization Gauge," USC Internal Report, 1975, R. W. Carlson and J. O. Maloy.

(s) "Review of Optimum Pulse Shaping Techniques for Pulse Height Analyzer Systems," USC Internal Report, 1975, J. O. Maloy.

(t) "On the Invertibility of Mutual Occultation Light Curves," presented at 1975 D.P.S. Meeting, Columbia, Md., February 1975, R. T. Brinkmann.

(u) "On the Invertibility of Mutual Occultation Light Curves," Icarus 27, 69 (1976).

(v) "Pioneer measurements of the Jovian satellites," presented at the Fall meeting, Amer. Geophys. Union, San Francisco, 1975, D. L. Judge, R. W. Carlson, F. M. Wu, and U. G. Hartmann.

(w) "Electron Impact Ionization of Io's Sodium Emission Cloud," Geophys. Res. Lett. 2, 469 (1975), R. W. Carlson, D. L. Matson, and T. V. Johnson.

(x) "Pioneer 10 Ultraviolet Photometer Observations of Jupiter: the Jovian Helium to Hydrogen Ratio," presented at the Tucson meeting, IAU Coll. No. 30, Aug. 1975, R. W. Carlson and D. L. Judge.

(y) "The Problem of Hydrogen at Io," presented at the Division for Planetary Sciences (AAS) meeting, Austin, Texas, April, 1976, R. W. Carlson and D. L. Judge.

(z) "Pioneer Ultraviolet Photometer Measurements of the Jovian Satellites," presented at the Tucson meeting, IAU Coll. No. 30, Aug., 1975, D. L. Judge, R. W. Carlson, U. G. Hartmann, and F. M. Wu.

(aa) "Pioneer 10 Ultraviolet Photometer Observations of Jupiter: the Jovian Helium to Hydrogen Ratio," Jupiter, University of Arizona Press, 1976, R. W. Carlson and D. L. Judge.

(bb) "Sodium D-Line Emission from Io: Line Profiles and Synoptic Observations," presented at the Division for Planetary Sciences (AAS) Meeting, Austin, Texas, April 1976, D. L. Matson, R. W. Carlson, J. T. Bergstralh, J. W. Young, and T. V. Johnson.

(cc) "Pioneer Ultraviolet Photometer Measurements of the Jovian Satellites," Jupiter, University of Arizona Press, 1976, D. L. Judge, R. W. Carlson, F. M. Wu and U. G. Hartmann.

(dd) "Io's Atmosphere and Ionosphere; New Limits on Surface Pressure from Plasma Models," presented at the Division for Planetary Sciences (AAS) Meeting, Austin, Texas, April 1976, T. V. Johnson, D. L. Matson, and R. W. Carlson.

(ee) "Io's Atmosphere and Ionosphere; New Limits on Surface Pressure from Plasma Models," Geophys. Res. Lett., 3, 293 (1976), T. V. Johnson, D. L. Matson and R. W. Carlson.

(ff) "Europa: Ultraviolet Emissions and the Possibility of Atomic Oxygen and Hydrogen Clouds," Astrophy. J., 225, 325 (1978), F. M. Wu, D. L. Judge and R. W. Carlson.

(gg) "Electron heating of interplanetary medium," Astrophy. J., 225, 1045 (1978), F. M. Wu and D. L. Judge.

(hh) "Europa: Ultraviolet Emissions and the possibility of Atomic Oxygen and Hydrogen Clouds", presented at the Fall Meeting, American Geophys. Union, San Francisco, 1977, D. L. Judge, F. M. Wu and R. W. Carlson.

(ii) "Electron Heating of Interplanetary Medium" presented at the Fall Meeting, Amer. Geophys. Union, San Francisco, 1977, F. M. Wu and D. L. Judge.

(jj) "Pioneer 10 UV Photometer Observations of the Interplanetary Glow at Heliocentric Distances from 2 to 14 AU," submitted to Astrophys. J., 1980, F. M. Wu, K. Suzuki, R. W. Carlson and D. L. Judge.

(kk) "Temperature and Flow Velocity of the Interplanetary Gases Along Solar Radii", 1979, Ap. J. 231, 574 (1979), F. M. Wu and D. L. Judge.

(ll) "Modification of Solar Lines Propagating Through the Interplanetary Medium" J. Geophys. Res., 84, 1979, F. M. Wu and D. L. Judge.

(mm) "UV Observations" presented at Chapman Conference on Jovian Magnetosphere-Satellite, Los Angeles, California, June 27, 1978, R. W. Carlson.

(nn) "Temperature and Flow Velocity of Interplanetary Gas Along Solar Radii and the Resulting Modification of Solar Lines Propagating Through the Interplanetary Medium", presented at the Fall Meeting, American Geophys. Union, San Francisco, 1978, F. M. Wu and D. L. Judge.

(oo) "Pioneer 10 UV Photometer Observations of the Interplanetary Glow at Heliocentric Distances from 2 to 17 AU" presented at the Spring Meeting, American Geophys. Union, Washington, 1979, F. M. Wu and D. L. Judge.

(pp) "Extreme Ultraviolet Observations of Astrophysical Plasma" presented at U.S.-Japan Seminar on Plasma Spectroscopy, Kyoto, Japan May 7-11, 1979, D. L. Judge; also published in the proceedings.

(qq) "A Reanalysis of the Observed Interplanetary Hydrogen Ly-α Emission Profiles and the Drived Local "Interstellar" Gas Temperature and Velocity, Astrophys. J., 1980, F. M. Wu and D. L. Judge. (in press).

(rr) "Pioneer 11 Ultraviolet Photometer Measurements of the Saturn System" presented at Fall Meeting of the AGU, San Francisco, December 3 to 7, 1979, D. L. Judge, F. M. Wu and R. W. Carlson. (Invited paper).

(ss) "Pioneer 11 Ultraviolet Photometer Measurements of the Saturn System", presented at the 11th Annual DPS/AAS Meeting, Clayton, Missouri, October 23-26, 1979, D. L. Judge, F. M. Wu and R. W. Carlson. (Invited paper).

(tt) "Ultraviolet Photometer Observations of the Saturnian System", Science 207, 431 (1980), D. L. Judge, F. M. Wu and R. W. Carlson.

(uu) "Observations of Extreme Ultraviolet Emissions from the Saturnian Plasmasphere", submitted to J. Geophys. Res. 1980, F. M. Wu, D. L. Judge and R. W. Carlson.

C. INTEGRATION PERIODS

The period during which counts are accumulated depends upon both the spacecraft data rate and the mode. The following table (Table 2) gives these integration periods in seconds for the corresponding modes and bit rates.

TABLE 2. Data Sampling Rate for Science Subcomm Words

Bit Rate (bps)	Mode	
	A or B	with D1, D2, or D3
16	12 sec	24 sec
32	6	12
64	3	6
128	3/2	3
256	3/4	3/2
512	3/8	3/4
1024	3/16	3/8
2048	3/32	3/16

Both the mode and bit-rate are available in the EDRs (see Part III, Section D)

D. DATA DECOMPRESSION

As mentioned above, the counts accumulated in one integration period are quasi-logarithmically compressed. These counts are transmitted as three - 3 bit words (words 55, 56, 57). To recover the numerical count, one uses the algorithm

IF X = 0; then counts = C;

ELSE COUNTS = $(32 + C) * (2^{15-X})$;

where C is the first five bits of the concentration of words 55, 56 and 57, and X is the last four bits. These relationships are illustrated in Fig. 4.

SPACECRAFT WORDS

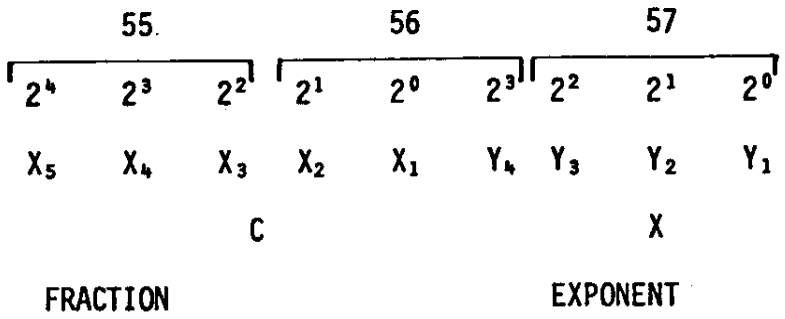

INSTRUMENT WORDS AND BIT WEIGHTING

IF X = 0 : "COUNTS" = C

IF $X \neq 0$: "COUNTS" = $(32 + C)\ [2^{(15 - X)}]$

Fig. 4. Algorithm to Decompress Telemetry Data

E. INSTRUMENT TIMING

The timing relationships in the instrument are determined by the spacecraft telemetry system, using a "phantom word gate" (PWG) which occurs once during each A and B format. The PWG initiates the following functions:

a) inhibits the counter

b) compression and transferring the accumulated counts to a buffer for telemetry readout

c) switches channels, depending upon the channel status bit (see below)

d) starts a new integration period.

The telemetry frame consists of 64 words, each 3 bits long, for a total of 192 bits. The format is shown in Fig. 5. The phantom word gate occurs at the beginning of word 29. The data count accumulated during the previous integration period is transmitted in words 55, 56, and 57 (see Fig. 4).

During portions of the mission, a shared format is used; A or B alternating with D1 or D2. In this case, the frame time is doubled, but the bit separation between the PWG, the data readout, and the start of that frame remain the same. Fig. 6 illustrates the timing relationships for these share formats.

The variable names used in Fig. 6 are derived from the USC UVP data reduction program (see IV). Explanations and relationships among these variables are given below:

BPS - an indicator for the bit rate, (word 7 of File 4)

BIT-RATE = the bit rate in bits per sec.

$= {}_2(BPS + 4)$

BIT-PER = 1/bit-rate

FRAME-PER = the integration time

= 192 * BIT-PER (Formats A, B)

= 384 * BIT-PER (Formats A, B + D)

DEL-TIME = The time (in misec) between the start of our integration period and the start of the telemetry frame for readout of that data.

= 108,000 * BIT-PER (Format A, D)

= 108,000 * BIT-PER + FRAME-PER (Format A, B & D)

DEL-TIME-PRIME = The time (in msec) between the middle of an integration period and the start of the telemetry frame during which these data are transmitted.

= 12,000 * BIT-PER (Format A, B)

=108,000 * BIT-PER (Format A, B & D)

RIP-TIME = Time of occurrence of a roll index pulse (RIP)

The channel (short or long wavelength) being integrated is controlled by roll index pulses (RIP) from the spacecraft, which occur once per roll when the UVP clock angle is -95.3° with respect to the ecliptic plane. The spacecraft rotates CCW as viewed from the Earth; for the UVP zero degrees occurs when the field-of-view ascends through a plane parallel to the ecliptic. Channel switching occurs at the PWG which occurs after every other RIP. Whenever a roll indix pulse occurs, a two state counter (the roll status, RS) is incremented by one.

F. CHANNEL AND ROLL ANGLE IDENTIFICATION

In general, we can recognize the two different channels by their relative counts; the long wavelength channel is almost always much higher in magnitude than the short-wavelength channel. A more mechanical method is available, however, to determine the appropriate channel identification which utilizes data contained in the subcommutated engineering data. Values of the channel

Fig. 5. Format A Word Assignment

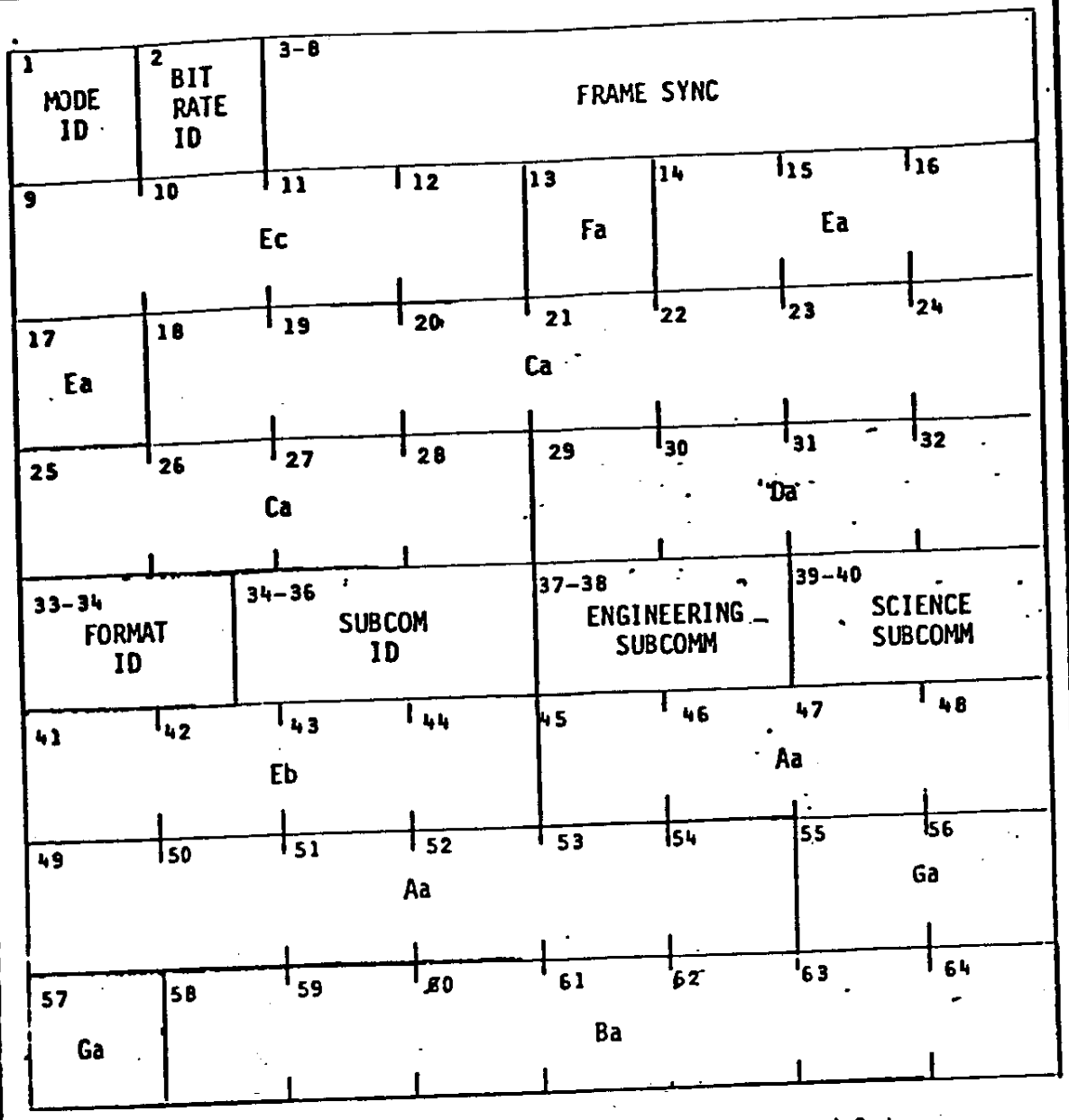

A - JPL Helium Vector Magnetometer
B - ARC Plasma Analyzer
C - U/Chicago Charged Particle Instr.
D - U/Iowa Geiger Tube Telescope
E - GSFC Cosmic Ray Telescope
F - UCSD Trapped Radiation Detector
G - USC Ultraviolet Photometer
H - U/Arizona Imaging Photopolarimeter
I - CIT Infrared
J - GE Asteroid/Meteoroid Det.
K - LaRC Meteoroid Detector

Phantom Word Gates

Da to Instrument G
Ea to Instrument B

Lower case letters denote separate data lines.

Fig. 6. Time Reference Definitions

- Counts are accumulated for a period of time corresponding to one effective TLM FRAME
- One TLM FRAME is from one PWG to the next PWG
- One effective TLM FRAME is one TLM FRAME except in 'D' format where it equals two TLM FRAMES because alternate PWG's are skipped
- One TLM FRAME = 192 BIT TIMES

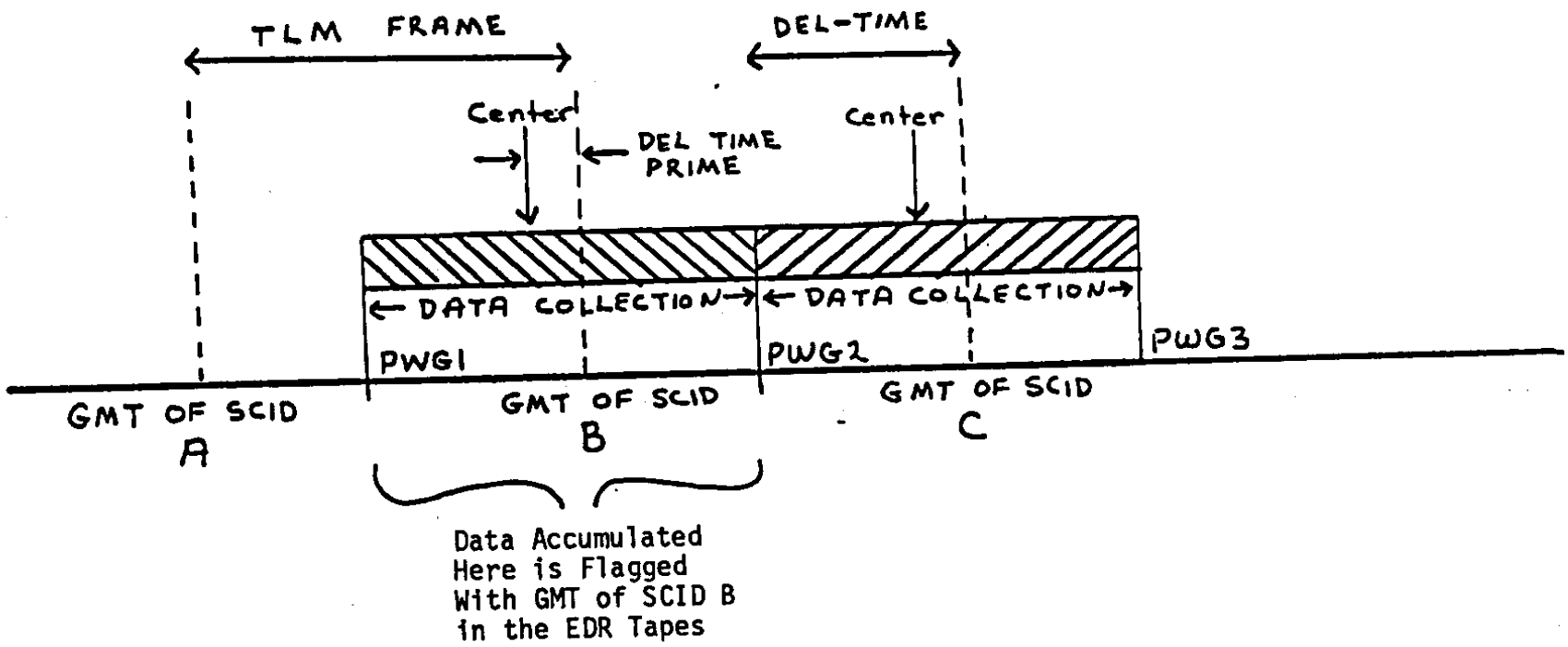

status and roll status are transmitted in the engineering telemetry, being the last two bits of subcomm words 124 and 224 (see Fig. 7). The engineering subcomm is transmitted in TLM words 37, 38. The roll status bit changes whenever a roll index pulse occurs, while the channel status changes only at the PWG occurring after two rolls. The telemetered value of the channel status is the channel currently accumulating data, which will be telemetered during the next T/M frame. In order to calculate the channel for other frames one must use roll altitude timer (RAT) and the spin period to predict the times of roll index pulses. The formula given in IV illustrates one way to accomplish this. Once the times of the RIP's are calculated, then the angles can be found knowing the spin rate and the center time of an integration period. This is also illustrated in the supplied program given in Part IV, Section B.

E-1

E109 (ANALOG)

Electronics Temperature (T5)

E-1 & E-2

S/C WORD	E124 & E224 (BILEVELS)					
BITS	1	2	3	4	5	6
BIT WEIGHTING					2^0	2^0

CS: CHANNEL STATUS

RS: ROLL STATUS

CHANNEL STATUS BIT: "0" = HELIUM-I = CHANNEL 1

"1" = LYMAN-ALPHA = CHANNEL 2

Fig. 7 FORMATS E-1 AND E-2 SPACECRAFT WORDS

II. PHYSICAL FORM OF THE DATA

A. INTRODUCTION

Experimental data is stored on 6250 BPI 9-track half-inch magnetic tape (2400' reels). Each tape contains a varying number of days' worth of data. One day of data consists of 4 data files called an Experiment Data Record or EDR. Further description of an EDR is given in Part III. A set of sequentially numbered tapes is provided for both the Pioneer 10 and 11 spacecraft. Each data tape is identified by a volume serial number or tape name. The tape name uses the following format:

Psnnn

where s = 'F' for Pioneer 10
= 'G' for Pioneer 11

and nnn= the tape number starting with oo1 and numbered sequentially.

For each data tape, a tape map or table of contents is given (see sections C and D). A map provides information about every data file stored on a tape, such as:

1) Volume serial number (Serial #)
2) Number of tracks (# Tracks)
3) Data file sequence number (Seq #)
4) The file's or data set's name (Date Set Name)
5) The julian date when the data set was created (Created)
6) The expiration date of the data set (Expires)
7) Whether the file is password protected (Security)
8) The name of the job that created the data set (Job Name)
9) The name of the step that created the data set (Stepname)
10) The recording format (RECFM) (F-always fixed)
11) The logical record length in bytes (LRECL)
12) The block size in bytes (BLKSIZE)
13) The recording density (Density) (6250BPI always)
14) The number of blocks in the data set (# Blocks)

The EDR files are stored in chronological order on the data tapes. The name of each file on the tape provides information about the time period covered. The format of each data set name is:

PsyyDddd.PppppFn

where
- s = 'F' for Pioneer 10
  = 'G' for Pioneer 11
- yy = the year number
- ddd = day of year
- pppp = Pass number or number of days since launch
- n = '1' File 1 - Logistics File
  = '2' File 2 - Command File
  = '3' File 3 - Spacecraft Attitude Data
  = '4' File 4 - Experiment Data

(see Part III)

For example, a data set named PG73D096 P0001F3, indicates the data set contains the third data file for Pioneer 11. The time period covered is day 96 of 1973 and is the first day since launch.

All data tapes are IBM Standard Label, (SL), formatted tapes. A description of SL format is given in the next section.

B. STANDARD LABEL FORMAT

Data is stored on the tapes in physical groups, called files, that are separated by single tapemarks. A Standard Label, (SL) tape has three tape files associated with it: Header labels, the data file itself, and trailer labels. Each data file has a header file in front of it and a trailer file placed after it on the tape. Thus, the first data file is on tape file 2, the second data file is on tape file 5, etc. For the nth data set:

Header file for data set n is on tape file ((3*n)-2)

Data set n is on tape file ((3*n)-1)

Trailer file for data set n is on tape file (3*n)

The header and trailer files provide information about the data file they surround. All label files are written in EBCDIC. A partial description of a header file is given below:

First record, (the VOL1 record)

1) has VOL1 in the first four character positions.

2) has the volume serial number in the next six positions.

3) is 80 characters long.

Second record, (the HDR1 record)

1) has HDR1 in the first four character positions.

2) has a data set name of 17 or fewer characters in the next 17 positions.

3) has the volume serial name in positions 22-27.

4) has the sequence number of the file in positions 32-35.

5) is 80 characters long.

Third record, (the HDR2 record)

1) has HDR2 in the first four character positions.

2) has the record format in position 5.

3) has the block size in positions 6-10.

4) has the logical record length in positions 11-15.

5) has the density in position 16.

6) has the job name which created the file in positions 18-25.

7) has the job step which created the file in positons 27-34.

8) is 80 characters long.

Trailer labels are similar in format to the HDR1 and HDR2 records, but are called EOF1 and EOF2 records.

For files after the first file, there is no VOL1 record, but there is a tape mark before the HDR1 and after the HDR2 record. Following the last usable data set and its trailer labels there are two tape marks to signify the end of data on the tape. A typical tape contents could be as follows:

VOL1 record

HDR1 record

HDR2 record

TAPE MARK

Date for first file

TAPE MARK

EOF1 record

EOF2 record

TAPE MARK

HDR1 record

HDR2 record

TAPE MARK

Date for last file

TAPE MARK

EOF1 record

EOF2 record

TAPE MARK

TAPE MARK

Diagrams of label information and further explanation of tape data organization can be found in the IBM manuals, "OS/VS TAPE LABELS", (GC26-3795-2).

C. TAPE MAPS FOR PIONEER 10

The following pages are tape maps of Pioneer 10 experimental data. See section A for a description of a tape map. In some cases, some days have been lost, so a gap may appear in the listing of data sets on the tape. In addition, the first file of an EDR may have been lost. In this case a file name of NO. FIRST.FILE will be used to signify this fact.

III. EXPERIMENT DATA RECORD FORMATS

A. FILE 1 - LOGISTICS FILE

File 1 contains the logistics information. It consists of one physical record of 480 EBCDIC characters blocked into four logical records of 120 characters. The format is as follows:

CHARACTERS	CONTENTS
1 - 14	PIONEER x EDR (x = F (Pioneer 10) or G (Pioneer 11))
15 - 16	Number of acquisitions
17 - 30	ACQUISITIONS
31 - 39	USC/UV
40 - 46	S/C ID
47 - 48	Spacecraft number (23 = Pioneer 10, 24 = Pioneer 11)
49 - 59	GENERATED
60 - 67	mm/dd/yy (Date Tape Generated)
68 - 80	REGENERATED
81 - 88	mm/dd/yy (Date Tape Regenerated)
89 - 96	ddd/yy (day and year of data)
97 - 104	DSIF NO.
105 - 120	List of DSS that tracked during the EDR time period. The list will be the BCD conversions of the station codes shown in Table 3. The entries will consist of two characters and will be separated by commas.
121 - 134	TLM BIT RATES

CHARACTERS	CONTENTS
135-240	List of all the bit rates encountered on this EDR tape. The entires consist of four characters separated by commas. Note: See introduction for relationship between bit rate, format and instrument integration time.
241-252	TLM FORMATS
253-360	List of all formats contained on this EDR tape. The entires consist of five alpha characters and will be separated by commas. Note: See introduction for relationship between bit rates, format and instrument integration time.
361-366	MODES
367-380	List of all modes encountered on this EDR tape. The entries consist of three alpha characters and will be separated by commas. The usual entry is RT (Real Time).
381-391	START TIME
392-396	hh/mm (earth receipt time)
397-407	STOP TIME
408-412	hh/mm (earth receipt time)
413-431	TAPE SEQUENCE NO.
432-433	Tape sequence number
434-480	blanks

B. FILE 2 - COMMAND FILE

File 2 is the command file. Each physical record consists of ten logical records. A logical record has the following format. The first eight characters of logical record one will indicate the total number of commands in file 2. The remaining logical records will have the form:

Characters	Meaning
1 - 8	Blanks
9 - 30	Command 1
31 - 52	Command 2
53 - 74	Command 3
75 - 96	Command 4
97 - 118	Command 5
119 - 120	Blanks

Thus, each logical record contains 120 characters and each physical record will contain 1200 characters (ten logical records). The format of each command is as follows:

```
DDD HH MM SS CCCCC F

        1111111111222
12345678901234567890
```

Where:

DDD	- Day of year of command verification
HH MM SS	- EVT (see note)
CCCCC	- Command mnemonic The only ultraviolet photometer commands are instrument off (UVP0), instrument on (UVP9) and remove cover (UVP1)
F	- V = Command verified N = Command not verified C = Command unverifiable

NOTE: Time is the actual or expected verification time calculated as follows:

EVT (Multiple Commands) - Time of transmission of the 22nd bit of execute command + round-trip-light-time (RTLT) + Delay time.

EVT (Single Commands) - Time of transmission of the 22nd bit of execute command + RTLT

EVT (Verified Commands) - Actual verification time.

C. FILE 3 - SPACECRAFT ATTITUDE DATA

File 3 is binary and contains S/C attitude data for the past 31 days for which data is available. There is a ten word entry for each day. The first entry is the least current and the last entry is the most current. All words are right adjusted unless otherwise stated. Missing entries are filled with zeros.

(1) Word 1 (DOY) - Elapsed days since start of year

(2) Word 2 (GMT) - Elapsed time in milliseconds since start of day for time of first data word in record.

(3) Word 3 (SPARE) - Blanks.

(4) Word 4 (FLAG) - The flag interpretation is as follows:

00 = Special Refinement (± 0.1 degree accuracy)
01 = High Gain Antenna (± 1.3 degree accuracy)
10 = Medium Gain Antenna (± 1.3 degree accuracy)
11 = Dynamic Position for Delta V Maneuver (± 3.0 degree accuracy).

(5) Word 5 (CLON) - Ecliptic longitude (degrees) of the spin axis. 32 bit floating point.

(6) Word 6 (CLAT) - Ecliptic latitude (degrees) of the spin axis. 32 bit floating point.

(7) Word 7 (CKAH) - Clock angle of Sun (Helios) in degrees. 32 bit floating point.

(8) Word 8 (CKAS) - Clock angle of Star (Canopus) in degrees. 32 bit floating point.

(9) Words 9 - 10 (SPARE) - Blanks.

D. FILE 4 - EXPERIMENT DATA RECORD

File 4 contains the data from the USC/UV experiment. It consists of a varying number of 4300 32-bit word records. All words are right justified and binary unless otherwise stated.

(1) Word 1 (GMT) - Time in elapsed milliseconds from start of day for earth receipt time of the first data word in the record.

(2) Word 2 (Day of Year) - Self explanatory.

(3) Word 3 (TCF) - Time correction flag. The following codes are in binary: 0 = no correction, 111 = suspect time or corrected time.

(4) Word 4 (AREFSELS) - Reference Select Status - Two bits. Fill of all binary "ones" indicates value missing.

Bits 31 & 32	Meaning
00	Error
01	Clock angles determined by STAR sensor
10	Clock angles determined by SUN sensor B
11	Clock angles determined by SUN sensor A

(5) Word 5 (SNR) - (SIGNAL + NOISE)/NOISE in 32 bit floating point format.

(6) Word 6 (DSS) - Deep Space Station which was tracking. See table 3.

(7) Word 7 (BIT RATE) - Bit rate at which data record was taken. See table 4.

(8) Word 8 (MOD-FMT) - Mode and Format are two data values, three bits and five bits respectively, packed to form eight bits right justified of Word 8.

MODE: The following codes are binary:

000 or 001 = real time;

100 or 101 = telemetry store;

010 or 011 = memory readout

See table 5.

(9) Word 9 (RTLT) - Round Trip Light Time will be given in total milliseconds.

(10) Word 10 (ESC Subcom ID) - The Extended Frame Counter will be a combined word from the S/C telemetry of both the subcommutator identification word and the extended frame counter word. Together they comprise a counter from 0 to 8191.

(11) Word 11 (ASTDLYC) - Star Delay Time (1/256 second resolution) in DN. Twelve bits with telemetry bits reversed to give proper bit weighing. Fill of all binary "ones" indicates value missing.

(12) Word 12 (FLAG1, FLAG2, FLAG3, FLAG4) - These are flags for RAT, ASPNPDC, SPF, and ARIPPHEC, respectively. Each flag is eight bits. Flag values are: 0 = OK, 1 = old value, 10 = missing value, and 11 = corrected value.

(13) Word 13 (RAT - Roll Attitude Timer) - This time permits correlation of the attitude of the roll index reference line with given telemetered science and engineering data. The word is 32 bit floating point.

(14) Word 14 (ASPNPDC - Spin Period) - The time between two successive roll pulses of the spacecraft. 32 bit floating point.

(15) Word 15 (SPF) - Flag for spin period (three bits). If low order is 0, then SPSG (Spin Period Sector Generator) roll reference = 0 degrees, if set to 1 = 180 degrees.

Bits 2 and 3	SPSG Modes
00	Non-Spin Averaging
01	ACS
10	Spin averaging

(16) Word 16 (ARIPPHEC - Roll Pulse/Roll-Index Pulse Phase Error) - The phase error measurement between the Roll Pulse and the Roll-Index Pulse with up to a maximum of 60 milliseconds of phase error, generated by the Spin Period Sector Generator (SPSG). Represented in a 32 bit floating point format.

(17) Word 17 (Time of Roll Attitude Timer) - GMT that Roll Attitude Timer word was received. All binary "ones" indicates time was missing.

(18) Word 18 (DC Bus Voltage) - Range 26 to 30 VDC. 32 bit floating point format. All binary "ones" indicates value was missing.

(19) Word 19 (DC Bus Current) - Range 0 to 6 Amperes. 32 bit floating point format. All binary "ones" indicates value was missing.

(20) Word 20 (POWER STATUS/GMT of Power Status) - The USC/UV Instrument's power status is located in Bit 5 of Word 20. 1 = power on, 0 = power off. GMT of power status word receipt is located in Bits 6 - 32 of Word 20. If Word 20 is all binary "ones", the power status was missing for this subcom cycle.

(21) Word 21 (PT - S/C Platform Temperature #5) - -20 degrees F to 110 degrees F. 32 bit floating point format. All binary "ones" indicates PT was missing for this subcom cycle.

(22) Word 22 (F, DQ) - Bit 1 of Word 22 is the fill indicator. Bits 2 and 3 are the data quality indicators. For bit definitions see table 6.

(23) Word 23 (DATA WORD) - Bits 1 - 2 are fill; Bits 3 - 8 correspond to subcommutated engineering data when related to the ultraviolet photometer; Bits 9 - 16 are mainframe word 55; Bits 17 - 18 are filler; Bits 19 - 24 are mainframe words 56 and 57; Bit 25 is a filler; Bits 26 -32 is the SCID number. (Subcommutator identification).

The three 3-bit mainframe words, when concatenated, represent the number of counts per integration period according to the algorithm given in the introduction.

Repeat words 22, 23	for words 24-277
Repeat words 12-278	for words 278-543
Repeat words 12-278	for words 544-809
Repeat words 12-278	for words 810-1075

TABLE 3. DSS Codes (Source Codes)

DSS Tracking Station	Value (Binary)
DSS 11	00001011
DSS 12	00001100
DSS 14	00001110
DSS 21	00010101
DSN SIMULATION CENTER (SIMCEN) (DSS 27)	00011011
DSS 41	00101001
DSS 42	00101010
DSS 51	00110011
DSS 61	00111101
DSS 62	00111110
DSS 71	01000111
CAPE BUILDING AO (DSS 70)	01000110
SFOF (DSS 00)	00000000
MERRITT ISLAND MSFN (MIL) (DSS 90)	01011010
USNS VANGUARD MSFN (VAN) (DSS 91)	01011011
BERMUDA MSFN (BDA) (DSS 92)	01011100
ASCENSION MSFN (ACN) (DSS 93)	01011101
CANARY ISLAND MSFN (CYI) (DSS 94)	01011110
BOULDER, COLORADO (DSS 99)	01100011

TABLE 4. Rate of Data Transmission from Spacecraft (BINARY)

VALUE (BINARY)	BCD	RATE IN BITS PER SECOND
0000	0	16
0001	1	32
0010	2	64
0011	3	128
0100	4	256
0101	5	512
0110	6	1024
0111	7	2048

TABLE 5. Format ID Assignments

FORMAT ID	BCD	FORMAT
0100-	8 or 9	A
0000-	0 or 1	B
0X100	4 or 12	C 1
0X101	5 or 13	C 2
0X110	6 or 14	C 3
0X111	7 or 15	C 4
11000	24	D1 WITH A
10000	16	D1 WITH B
11001	25	D2 WITH A
10001	17	D2 WITH B
11010	26	D3 WITH A
10010	18	D3 WITH B

- = DON'T CARE STATE (MAY BE ONE OR ZERO)

X = 1 WHEN ROTARY C (OPERATIONALLY FORCED)

TABLE 6. Quality Indicator (BINARY)

VALUE (BINARY)	BCD	MEANING
11	3	ALL INDICATORS ARE GOOD, DATA IS GOOD
10	2	AT LEAST ONE INDICATOR IS BAD, DATA IS SUSPECT
01	1	AT LEAST TWO INDICATORS ARE BAD, DATA IS SUSPECT
00	0	DATA IS BAD - NO SYNC

This value is computed by the following logic:

QI = FS(1 + S + H), where:

FS = 1 if Data Stream is in SYNC in 360

0 if Data Stream not in SYNC

S = 1 if Average SNR over frame is >= a specified minimum

0 if Average SNR over frame is < a specified minimum

H = 1 if HSD BLOCK was received with no error indicators

0 if any bit errors were detected in HSD BLOCK

E. Binary Data Representation

Floating Point Number - A floating point number consists of a signed hexadecimal fraction and an unsigned seven-bit binary integer called the characteristic. The characteristic represents a signed exponent and is obtained by adding 64 to the exponent value (excess-64 notation). The range of the characteristic is 0 to 127, which corresponds to an exponent range of -64 to 63. The value of a floating point number is the product of its fraction and the number 16 raised to the power of the exponent which is represented by its characteristic.

The fraction of a floating point number is treated as a hexadecimal number because it is considered to be multiplied by a number which is a power of 16. The radix point is assumed to be immediately to the left of the leftmost fraction digit. The fraction is represented by its absolute value and a separate sign bit. The entire number is positive or negative depending on whether the sign bit of the fraction is zero or one, respectively.

Example: Convert 59.25 to a floating point number

1) The number is split into a decimal integer and fraction 59.25 = 59. + 0.25

2) The decimal integer is converted to hexadecimal $59_{10} = 3B_{16}$

3) The decimal fraction is converted to hexadecimal $0.27_{10} = 0.4_{16}$

4) The integral and fractional parts are combined and expressed as a fraction times a power of 16. $3B.4 = 03B4 * 16^2$

5) The characteristic is developed from the exponent and converted to binary

   Base + exponent = characteristic

   64 + 2 = 66 = 1000010 (binary)

6) The fraction is converted to binary and grouped hexadecimally

   0.3B4 = 0011 1011 0100 (binary)

7) The characteristic and the fraction are stored in the format below

```
     S Char     Fraction
     0 1000010 001110110100 0000 0000 0000 0000
bits 0 1    7 8                              31
```

Signed binary integers - The leftmost bit (bit 0) is the sign of the number. A one in bit 0 represents a negative number. The remaining bits (1-31) are used to designate the magnitude of the number. The radix point is considered to be fixed at the right. Positive binary integers are in true binary notation with a zero sign bit. Negative integers are in two's complement notation with a one bit in the sign bit.

Example: $35_{10} = 23_{16}$

S Magnitude

0000 0000 0000 0000 0000 0000 0010 0011

bits 0 31

Further documentation may be found in IBM manual, "OS/VS-DOS/VS-VM/370 Assembler language", GC33-4010-4

IV. A SAMPLE DATA PROCESSING PROGRAM FOR PIONEER USC/UV DATA

A. INTRODUCTION

The Pioneer 10 and 11 data tapes supply information containing the attitude of the spacecraft and the timing of various parameters. These must be decoded so the clock angle and the data channel for each data point can be determined.

The paragraphs which follow describe the method used. The variable names refer to those used within the USC PL-1 data processing program.

General Description

The data is within a repeating data block 192 bits long. Within each such block there is;

1. GMT-of-SCID, time in ms (absolute within day) corresponding to the start of that frame.
2. Data value.
3. ID number, fill indicator, data quality indicator.

The spacecraft can transmit at various bit rates so the length of these frames is of constant length in bits, not time. In addition to the pattern of data frames there are Roll Index Pulses (RIPS) occurring every spin period. Enough data is provided to calculate the RIP time.

Data Time Determination

In non-shared data format the following number variables have these values:

FRAME-PER ≡ time required for 192 bits

DEL-TIME ≡ time between a data frame boundary (GMT-of-SCID) and the previous phantom word data.

≡ 108 bit timer.

DEL-TIME-PRIME ≡ time between a data frame boundary and the present center of data collection period ≡ 12 bit times.

In shared format data is transmitted every other frame so these variables have the same definition, only different numerical values.

FRAME-PER = 384 bit times

DEL-TIME = 300 bit times

DEL-TIME-PRIME = 108 bit times

Data is gathered for the length of the frame (192 bits), however, the counters do not reset at the frame boundaries. Instead the counters reset at the Phantom Word bate (PWG). The PWG's are 84 bit times after the frame boundary.

For each GMT-of-SCID there is a data value. The GMT-OF-SCID associated with a data value is the last (only is non shared format) such frame boundary to occur during a data collection period (between PWGs). This is the example in Fig. 6. The GMT-OF-SCID B is associated with the first data gathered region value. There must be a time associated with each data point which corresponds to the exact collection time. The center of each collection period was chosen. Thus, subtracting DEL-TIME-PRIME from GMT-OF-SCID gives a time in ms which corresponds to the center of the data collection interval.

Channel Determination

Superimposed on the data frame pattern are RIPS. These occur once each spin period. These two patterns are asynchronous. When a RIP occurs the CSRS (channel states, roll status) variable is incremented by one, after the end of the present data gathering cycle (i.e. at the next PWG). When the second bit of the CSRS changes (every other roll, the channel is switched between Hydrogen and Helium.

The value for CSRS is supplied once every 32 frames. The RIP-TIME is calculated from data supplied on the tape;

RIP-TIME = GMT-OF-C112 = 1000.0 * RAT + PE

RHT = Roll Attitude times (sec)

PE = Phase Error (ms)

The next predicted rip time is calculated by adding the spin period (SP) to the RIP-TIME. These two variables are called LAST-RIP and NEXT-RIP.

Because of the slight uncertainties in these values, there is a region around each Phantom Word Gate where ambiguities exist. If a RIP occurs "very near" a PWG the channel may or may not change before that data gathering period. The half width of this error window is called RIP-TOL, and another variable RIP-TOL-2 is the full width.

The data tapes contain GMT-OF-SCID, not PWG times, so if the constant DEL-TIME = 108 bit times is added to the RIP-TIME, the result is a projected rip time in a "GMT-OF-SCID reference system". The variables NR1 and NR2 are just these values. They represent the limits of the error window within the GMT-OF-SCID Reference.

Example (See Fig. 8)

Case A, Fig. 8. If the Rip Time is at point A, then $NR1_A$ and $NR2_A$ both are earlier than GMT-OF-SCID at D. This data from D belongs to the new CSRS.

Case B, Fig. 8. A RIP at point B implies $NR1_B$ and $NR2_B$ are both later than GMT-OF-SCID. Data belongs to old CSRS.

Case C, Fig. 8. A RIP at point C would cause $NR1_C$ and $NR2_C$ to be on opposite sides of GMT-OF-SCID. CSRS should be incremented, and this data point ignored.

Angle Determination

The clock angle of each data point is expressed as a bin number 1 to 128. There is a constant angle offset for each data point. This is because:

1) The USC instrument has a clock angle of -95.3°

2) The exact direction at the time of a RIP is not always the same.

The variables used in this calculation are

DEL-ANGLE = -95.3 or = +180-95.3 as a function of the SPIN Period Sector Generator.

Fig. 8. RIP Time Determination

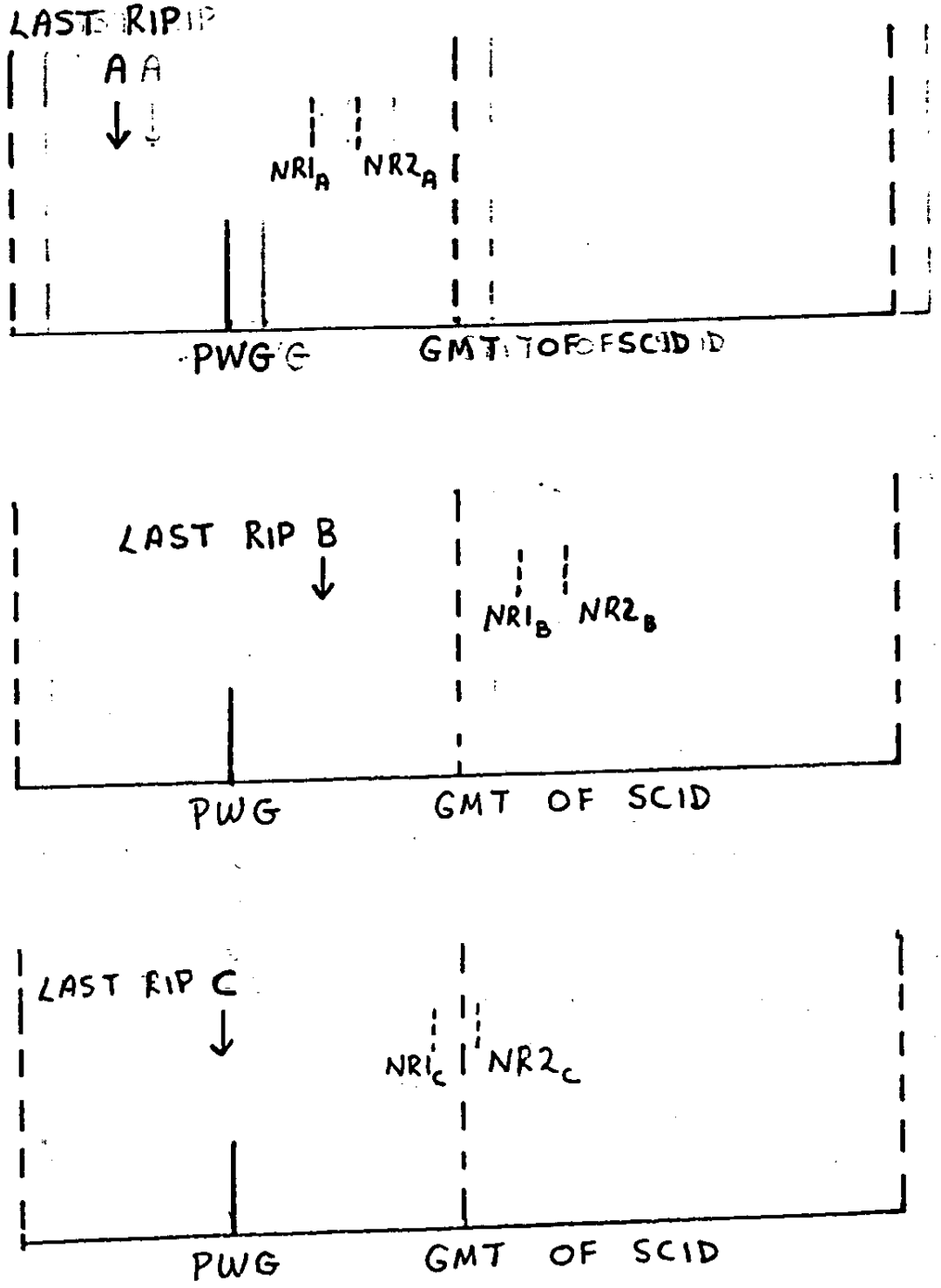

Delt 1 = CKAS (Day I) + 25 or = CKAH (Day I) as a function of a star being used for reference or not.

STK = Star-Delay * 1000.0/256.0 if a star is used (the numbers involved in STK convert the value to ms).

This offset is summed as an angle called DELT and a a number of bins called FANG. Notice that FANG is an integer. Care must be taken in rounding the original value to get an integer. BIN-1 = BIN 126 so the expression involving sign (Delt) and ABS must be used in PL1.

Assuming all offsets are accounted for in FANG, the RIP time represents a clock angle of 0°. So if the difference in time between a RIP and the center of a data gathering period is divided by the spin period, the result is the percentage of the entire circle. This ratio represents (bin number/128). Therefore the bin number can be calculated.

The variable LR is the last RIP time along with Del-Time-Prime (needed to convert GMT-OF-SCID to center of data interval, see section on Data time determination). Therefore GMT-OF-SCID-LR represents the time difference between the last RIP and the center of the data period. This time can be converted to an angle and to a bin number. Finally, the offset Fang, can be summed to produce a bin number for the data point. Mod arithmetic keeps the value 1 to 128.

Thus angle and channel assignment can be created for each data point.

B. LISTING OF THE COMPUTER PROGRAM

The following is a listing of the USC/UV computer program designed to process data from the Pioneer 10 and 11 data tapes. The program is written in PL/I, but can easily be modified in structure to be written into FORTRAN. The user is referred to the IBM manual "PL/I (F) Language Reference Manual" for more information on PL/I programming language.

SOURCE LISTING

```
STMT LEV NT

                  /* FRPA070.RPC01.UVPROG.CNTL(PROG) */
                  /*PROGRAM TO PROCESS PIONEER 10/11 USC/UV PHOTOMETER DATA*/
  1       0       PROG:PROCEDURE OPTIONS(MAIN) REORDER;
  2   1   0           DCL FILE1 FILE INPUT RECORD ENV(BUFFERS(1) F TOTAL
                        BLKSIZE(480));
  3   1   0             DCL 1 LOGISTICS,
                            2 HEADER1 CHAR(14),
                            2 ACQUISITIONS CHAR(16),
                            2 HEADER2 CHAR(18),
                            2 GENERATION CHAR(48),
                            2 DSIF CHAR(24),
                            2 BIT_RATES CHAR(120),
                            2 FORMATS CHAR(120),
                            2 MODES CHAR(20),
                            2 TIMES CHAR(32),
                            2 SEQUENCE CHAR(21),
                            2 FILL1 CHAR(47);
  4   1   0           DCL FILE2 FILE INPUT RECORD ENV(BUFFERS(1) F TOTAL
                        BLKSIZE(1200));
  5   1   0             DCL 1 COMMANDS,
                            2 LOGICAL_RECORDS(10),
                              3 N PICTURE'(8)9',
                              3 COMD(5) CHAR(22),
                              3 FILL2 CHAR(2);
  6   1   0           DCL FILE3 FILE INPUT RECORD ENV(BUFFERS(1) F TOTAL
                        BLKSIZE(1240));
  7   1   0             DCL 1 TRAJ,
                            2 ENTRY(31),
                              3 DAY FIXED BIN(31),
                              3 MSEC BIT(32),
                              3 FILL3 BIT(32),
                              3 FILL4 BIT(30),
                              3 FLAG BIT(2),
                              3 CLONG BINARY FLOAT(21),
                              3 CLAT BINARY FLOAT(21),
                              3 CKAH BIN FLOAT(21),
                              3 CKAS BIN FLOAT(21),
                              3 FILL5 BIT(64);
  8   1   0           DCL FILE4 FILE INPUT RECORD ENV(BUFFERS(1) F TOTAL
                        BLKSIZE(4300));
  9   1   0             DCL 1 UVDATA,
                            2 TRACK,
                              3 GMT FIXED BIN(31),
                              3 DD FIXED BIN(31),
                              3 TCF FIXED BIN(31),
                              3 FILL6 BIT(30),
                              3 AREF BIT(2),
                              3 SNR BINARY FLOAT(21),
                              3 FILL7 BIT(24),
                              3 DSS BIT(8),
                              3 FILL8 BIT(28),
                              3 BPS1 BIT(4),
```

```
S.MT LEV NT
                                                                                  00000530
                                  3 FILL9 BIT(24),                                00000540
                                  3 MODE BIT(3),                                  00000550
                                  3 FMT BIT(5),                                   00000560
                                  3 RTLT FIXED BIN(31),                           00000570
                                  3 ESC BIT(32),                                  00000580
                                  3 FILL10 BIT(20),                               00000590
                                  3 STAR_DELAY BIT(12),                           00000600
                                2 SUBCOM(4),                                      00000610
                                  3 SCRAFT,                                       00000620
                                    4 FILL11 BIT(6),                              00000630
                                    4 FLAG4 BIT(2),                               00000640
                                    4 FILL12 BIT(6),                              00000650
                                    4 FLAG3 BIT(2),                               00000660
                                    4 FILL13 BIT(6),                              00000670
                                    4 FLAG2 BIT(2),                               00000680
                                    4 FILL14 BIT(6),                              00000690
                                    4 FLAG1 BIT(2),                               00000700
                                    4 RAT BINARY FLOAT(21),                       00000710
                                    4 SPIN_PER BINARY FLOAT(21),                  00000720
                                    4 FILL15 BIT(29),                             00000730
                                    4 SPF BIT(3),                                 00000740
                                    4 PHASE_ERROR BINARY FLOAT(21),               00000750
                                    4 GMT_OF_C112 FIXED BIN(31),                  00000760
                                    4 BUS_VOLTAGE BINARY FLOAT(21),               00000770
                                    4 BUS_CURRENT BINARY FLOAT(21),               00000780
                                    4 FILL16 BIT(4),                              00000790
                                    4 C_124 BIT(1),                               00000800
                                    4 GMT_OF_C124 BIT(27),                        00000810
                                    4 PT BINARY FLOAT(21),                        00000820
                                  3 SCIENCE(128),                                 00000830
                                    4 F BIT(1),                                   00000840
                                    4 DQ BIT(2),                                  00000850
                                    4 GMT_OF_SCID BIT(29),                        00000860
                                    4 FILL17 BIT(2),                              00000870
                                    4 ENG BIT(6),                                 00000880
                                    4 FILL18 BIT(5),                              00000890
                                    4 WORD55 BIT(3),                              00000900
                                    4 FILL19 BIT(2),                              00000910
                                    4 WORD56 BIT(6),                              00000920
                                    4 FILL20 BIT(1),                              00000930
                                    4 SCID BIT(7);                                00000940
10    1    0              DCL FILE FILE OUTPUT RECORD ENV(BUFFERS(1) F TOTAL      00000950
                            BLKSIZE(1332));                                       00000960
11    1    0              DCL 1 OUTPUT,                                           00000970
                                2 HEADER1 CHAR(14),                               00000980
                                2 HEADER2 CHAR(18),                               00000990
                                2 FORMATS CHAR(120),                              00001000
                                2 TIMES CHAR(32),                                 00001010
                                2 FILL21 CHAR(8),                                 00001020
                                2 SNRA BIN FLOAT(21),                             00001030
                                2 START_TIME BIN FIXED(31),                       00001040
                                2 END_TIME BIN FIXED(31),                         00001050
                                2 TOTAL_TIME FLOAT BIN(53),                       00001060
                                2 FILL22 CHAR(88),                                00001070
                                2 AVERAGES(2),
```

```
MT LEV NT
                                                                                                                00001080
                          3 MEANS(128),                                                                         00001090
                          4 MEAN FLOAT BIN(21),                                                                 00001100
                          2 FILL23 CHAR(2),                                                                     00001110
                          2 DOY FIXED BIN(31);                                                                  00001120
 12   1  0          DCL IDENT(26) CHAR(1) INITIAL('A','B','C','D','E','F','G','H',                             00001130
                          'I','J','K','L','M','N','O','P','Q','R','S','T',                                     00001140
                          'U','V','W','X','Y','Z');                                                             00001150
 13   1  0           DCL WORD FIXED BIN(15);                                                                    00001160
 14   1  0          DCL BIT_RATE BIN FIXED,                                                                     00001170
                     (BIT_PER,FRAME_PER,DEL_TIME) BIN FLOAT(53),                                                00001180
                     (DEL_TIME_PRIME,RIP_TIME,NEXT_RIP,LAST_RIP) BIN FLOAT(53),                                 00001190
                     (GMT_START,GMT_OF_SUBCOM) BIN FLOAT(53),                                                   00001200
                     SP BIN FLOAT(53),                                                                          00001210
                     COUPER(2,128) BIN FLOAT,                                                                   00001220
                     NUM(2,128) BIN FLOAT,                                                                      00001230
                     INIT_TIME BIN FIXED(31),                                                                   00001240
                     CSRS BIN FIXED,                                                                            00001250
                     (FF1,FF3,FF4) BIN FIXED,                                                                   00001260
                     (NR1,NR2,[redacted],GMT_SCID) BIN FIXED(31),                                               00001270
                     (GMT_TEST1,GMT_TEST2) BIN FIXED(31),                                                       00001280
                     (C,X) BIN FIXED,                                                                           00001290
                     (SIGNAL) BIN FIXED,                                                                        00001300
                     (RIP_TOL,RIP_TOL2,FANG) BIN FIXED(31),                                                     00001310
                     SPSG BIT(3);                                                                               00001320
 15   1  0           DCL BPS FIXED BIN;                                                                         00001330
 16   1  0           DCL (IH,IM,IS) BIN FIXED(15);                                                              00001340
 17   1  0           DCL STAR1 FIXED BIN;                                                                       00001350
                                                                                                                00001360
                                                                                                                00001370
                                                                                                                00001380
 18   1  0          GET LIST (NO_OF_DAY);                                                                       00001390
 19   1  0          DO III=1 TO NO_OF_DAY;                                                                      00001400
 20   1  1          OPEN FILE(FILE1) TITLE('FILE'||IDENT(III));                                                 00001410
                                                                                                                00001420
 21   1  1           ON TRANSMIT(FILE1) GO TO F2;                                                               00001430
 22   1  1           OPEN FILE(FILE1) TITLE('FILE1'||IDENT(III));                                               00001440
 23   1  1           READ FILE(FILE1) INTO (LOGISTICS);                                                         00001450
 24   1  1           PUT SKIP EDIT(LOGISTICS.HEADER1,LOGISTICS.HEADER2)(A,A);                                   00001460
 25   1  1           PUT SKIP EDIT(ACQUISITIONS)(A);                                                            00001470
 26   1  1           PUT SKIP EDIT(GENERATION)(A);                                                              00001480
 27   1  1           PUT SKIP EDIT(OSIF)(A);                                                                    00001490
 28   1  1           PUT SKIP EDIT(BIT_RATES)(A);                                                               00001500
 29   1  1           PUT SKIP EDIT(LOGISTICS.FORMATS)(A);                                                       00001510
 30   1  1           PUT SKIP EDIT(MODES)(A);                                                                   00001520
 31   1  1           PUT SKIP EDIT(LOGISTICS.TIMES)(A);                                                         00001530
 32   1  1           PUT SKIP EDIT(SEQUENCE)(A);                                                                00001540
                                                                                                                00001550
                                                                                                                00001560
 33   1  1  F2:      CLOSE FILE(FILE1);                                                                         00001570
 34   1  1           ON ENDFILE(FILE2) GO TO F3;                                                                00001580
 35   1  1           ON TRANSMIT(FILE2) GO TO F3;                                                               00001590
 36   1  1           OPEN FILE(FILE2) TITLE('FILE2'||IDENT(III));                                               00001600
 37   1  1           READ FILE(FILE2) INTO(COMMANDS);                                                           00001610
 38   1  1           PUT SKIP EDIT('NUMBER OF COMMANDS SENT=',N(I))(A,F(3));                                    00001620
```

```
MT LEV NT

39   1   1   F3:     CLOSE FILE(FILE2);
40   1   1           ON TRANSMIT(FILE3) GO TO F4;
41   1   1           ON ENDFILE(FILE3) GO TO F4;
42   1   1           OPEN FILE(FILE3) TITLE('FILE3'||IDENT(III));
43   1   1           READ FILE(FILE3) INTO(TRAJ);
44   1   1           PUT SKIP EDIT('ALTITUDE DATA')(A);
45   1   1           DO I=1 TO 31;
46   1   2            PUT SKIP EDIT(ENTRY.DAY(I),ENTRY.MSEC(I),ENTRY.FLAG(I),CLONG(I)
                      ,CLAT(I),CKAH(I),CKAS(I))(7(F(10,4)));
47   1   2           END;

48   1   1   F4:     CLOSE FILE(FILE3);
49   1   1           IEND=0;
50   1   1           ON TRANSMIT(FILE4) GO TO R4;
51   1   1           ON ENDFILE(FILE4) BEGIN;
52   2   1              IEND=1;
53   2   1              GO TO OUTP;
54   2   1              END;
55   1   1           ON UNDERFLOW BEGIN;
56   2   1              PUT SKIP;  PUT SKIP;
58   2   1              PUT SKIP EDIT('UNDERFLOW CONDITION RAISED')(A);
59   2   1              GO TO TAIL;
60   2   1              END;
61   1   1           ON OVERFLOW BEGIN;
62   2   1              PUT SKIP EDIT(RIP_TIME,GMT_OF_C112(J),RAT(J),PE)(4(E(20,5)));
63   2   1              GO TO R4;
64   2   1              END;
65   1   1           OPEN FILE(FILE4) TITLE('FILE4'||IDENT(III));

                     /*BEGIN SCIENTIFIC DATA PROCESSING*/
                     /*READ START TIME IN HHMM*/
                     /* SIGNAL IS INTERPRETED AS NUMBER OF CONSECUTIVE INTERVALS*/
                     /*DAILY INITIALIZATION OF FLAGS*/
66   1   1           CSRS=0;
67   1   1           RIP_TOL=6;   RIP_TOL2=RIP_TOL+RIP_TOL;
69   1   1           GET LIST (SIGNAL);
70   1   1           IF SIGNAL<0 THEN GO TO TAIL;  /*END RUN ON NEGATIVE FLAG*/
71   1   1           START_TIME=0;

72   1   1   CHIN:   COUPER=0.0;
73   1   1           MEAN=0.0;
74   1   1           NUM=0.0;
75   1   1           TOTAL_TIME=0.0;

76   1   1   R4:     READ FILE(FILE4) INTO(UVDATA);

                     /*CHECK IF THIS FILE CONTAINS USC DATA*/
77   1   1            IF(FMT&'00100'B)='00100'B THEN GO TO R4;

                     /*CHECK POWER STATUS. WAIT 10 MIN AFTER TURNON*/
78   1   1           DO J=1 TO 4;
```

```
MT LEV NT

 79   1  2          IF C_124(J)='0'B THEN DO;                                          00002180
 80   1  3                               START_TIME=START_TIME+600000;                00002190
 81   1  3                               GO TO R4;                                    00002200
 82   1  3                               END;                                         00002210
 83   1  2          END;                                                               00002220
                                                                                      00002230
                     /*CHECK FOR GOOD STAR DATA*/                                     00002240
 84   1  1          IF AREF='00'B THEN GO TO R4;                                       00002250
 85   1  1          IF AREF='01'B & STAR_DELAY='111111111111' THEN GO TO R4;           00002260
                                                                                      00002270
                                                                                      00002280
                                                                                      00002290
 86   1  1          BPS=BPS1;                                                          00002300
 87   1  1          BIT_RATE=108**(BPS+1008);                                          00002310
 88   1  1          BIT_PER = 1.0/BIT_RATE;                                            00002320
 89   1  1          FRAME_PER = 192.0*BIT_PER;                                         00002330
 90   1  1          DEL_TIME = 108000.0*BIT_PER;                                       00002340
 91   1  1          DEL_TIME_PRIME = 12000.0*BIT_PER;                                  00002350
                     /*HALVE EFFECTIVE BIT RATE IN TIME-SHARED FORMAT*/               00002360
 92   1  1          IF SUBSTR(FMT,1,1)='1'B THEN DO;                                   00002370
 93   1  2          DEL_TIME = DEL_TIME + FRAME_PER*1000;                              00002380
 94   1  2          FRAME_PER = FRAME_PER + FRAME_PER;                                 00002390
 95   1  2          DEL_TIME_PRIME = 108000.0*BIT_PER;                                 00002400
 96   1  2          END;                                                               00002410
                     /*SEARCH FOR DESIRED STARTING TIME*/                             00002420
 97   1  1          IF GMT+512000*FIXED(FRAME_PER,31,0)<START_TIME THEN GO TO R4;      00002430
                                                                                      00002440
                     /*IF PARAMETERS NOT ALL GOOD USE EARLIEST GOOD VALUES*/          00002450
 98   1  1          FF1=FF3=FF4=0;                                                     00002460
 99   1  1          DO J=4 TO 1 BY -1;                                                 00002470
100   1  2          IF FLAG3(J)='00'B THEN DO; SP=1000.0*SPIN_PER(J); FF3=1;           00002480
103   1  3                                IF(ABS(SP)<0.01) THEN SP=12657.4;           00002490
104   1  3               ROLL=SP/128.0;  END;                                         00002500
106   1  2          IF FLAG1(J)='00'B THEN DO; SPSG=SPF(J); FF1=1; END;                00002510
110   1  2          IF FLAG4(J)='00'B THEN DO; PE=PHASE_ERROR(J); FF4=1; END;          00002520
114   1  2          END;                                                               00002530
115   1  1          IF (FF1+FF3+FF4)<3 THEN GO TO R4;                                  00002540
                                                                                      00002550
                     /*NOW WE HAVE ENOUGH DATA TO MAKE USE OF A RIP*/                 00002560
                     /*SEARCH FOR EARLIEST GOOD RIP*/                                 00002570
116   1  1          DO J=1 TO 4;                                                       00002580
117   1  2          IF FLAG2(J)='00'B THEN GO TO BEGN;                                 00002590
118   1  2          END;                                                               00002600
119   1  1          GO TO R4;                                                          00002610
                                                                                      00002620
120   1  1  BEGN:   INIT_TIME=GMT;                                                    00002630
121   1  1          GMT_START=GMT-DEL_TIME;                                            00002640
                                                                                      00002650
                     /*COMPUTE RELATIVE DEAD TIME PER EVENT WITH 10 MICROSEC FIXED    00002660
                     DEAD TIME DISCRIMINATOR*/                                      00002670
                     /*CHECK ATC TEST DATA FOR ACTUAL INSTRUMENT DEAD TIME      */   00002680
122   1  1          DEAD=1.0E-05/FRAME_PER;                                            00002690
                                                                                      00002700
                                                                                      00002710
123   1  1          RIP_TIME=GMT_OF_C112(J)-1000.0*RAT(J)+PE;                          00002720
```

```
MT LEV NT

                        /*CALCULATE TIME OF RIP PRECEDING START OF LOGICAL RECORD*/      00002730
124    1   1            LAST_RIP=RIP_TIME-CEIL((RIP_TIME-GMT_START+RIP_TOL)/SP)*SP;     00002740
125    1   1            NEXT_RIP=LAST_RIP+SP;                                           00002750
126    1   1            NR1=FIXED(NEXT_RIP+DEL_TIME,31,0)-RIP_TOL;                      00002760
127    1   1            NR2=NR1+RIP_TOL2;                                               00002770
128    1   1            N1=FRAME_PER*128000/SP/2+0.5;                                   00002780
                                                                                        00002790
                                                                                        00002800
129    1   1            DO J=31 TO 1 BY -1;                                             00002810
130    1   2            IF DAY(J)=DD THEN DO;                                           00002820
131    1   3            IDAY=J; /*SETS INDEX FOR THE CORRECT DAY*/                      00002830
132    1   3            GO TO OUT;                                                      00002840
133    1   3            END;                                                            00002850
134    1   2            IF(DAY(J)^='000000000000000000000000000000'B)&(DAY(J)<DD)THEN   00002860
                        DO;                                                             00002870
135    1   3            IDAY=J; GO TO OUT;  END;                                        00002880
138    1   2            END;                                                            00002890
139    1   1        OUT: IF AREF='01'B THEN DO;                                         00002900
140    1   2                    STAR1=STAR_DELAY;                                      00002910
141    1   2                    STK=STAR1*1000.0/256.0;                                00002920
142    1   2                    DELT1=CKAS(IDAY)+25.0; END;                            00002930
144    1   1                ELSE DELT1=CKAH(IDAY)+25.0; END;                           00002940
                                                                                        00002950
                                                                                        00002960
                        /*ENTER LOOP TO PROCESS 4 LOGICAL RECORDS*/                     00002970
145    1   1            DO J=1 TO 4; /*ENDS AT L00*/                                    00002980
                        /*UPDATE THE SPIN PARAMETERS AS WE GO IF GOOD DATA*/           00002990
146    1   2            IF FLAG3(J)='00'B THEN DO; SP=1000.0*SPIN_PER(J);              00003000
148    1   3                                IF(ABS(SP)<0.01) THEN SP=12657.4;          00003010
149    1   3                ROLL=SP/128.0;  END;                                       00003020
151    1   2            IF FLAG1(J)='00'B THEN SPSG=SPF(J);                            00003030
152    1   2            IF FLAG4(J)='00'B THEN PE=PHASE_ERROR(J);                      00003040
153    1   2            DEL_ANGLE=-95.3;                                               00003050
154    1   2            IF SUBSTR(SPSG,1,1)='1'B THEN DEL_ANGLE=180.0-95.3;            00003060
                                                                                        00003070
                                                                                        00003080
                        /*CONVERT ANGULAR OFFSETS TO MS, FIXED*/                       00003090
155    1   2            DELT=(DELT1+DEL_ANGLE)*SP/360.0;                               00003100
156    1   2            IF AREF='01'B THEN DELT=DELT+STK;                              00003110
157    1   2            FANG=SIGN(DELT)*FIXED(ABS(DELT/ROLL)+.5);  /*OFFSET IN BINS*/ 00003120
158    1   2            IF FLAG2(J)='00'B THEN DO;                                     00003130
159    1   3            RIP_TIME=GMT_OF_C112(J)-1000.0*RAT(J)+PE;                      00003140
160    1   3            LAST_RIP=RIP_TIME-CEIL((RIP_TIME-GMT_START+RIP_TOL)/SP)*SP;    00003150
161    1   3            NEXT_RIP=LAST_RIP+SP;                                          00003160
162    1   3            NR1=FIXED(NEXT_RIP+DEL_TIME,31,0)-RIP_TOL;                     00003170
163    1   3            NR2=NR1+RIP_TOL2;                                              00003180
164    1   3            END;                                                           00003190
                                                                                        00003200
                                                                                        00003210
                        /*SYNC EACH RECORD*/                                           00003220
165    1   2            DO K=24 TO 120 BY 32;                                          00003230
166    1   3            IF F(J,K)='1'B THEN GO TO L00;                                 00003240
167    1   3            GMT_OF_SUBCOM=GMT_OF_SCID(J,K)+112000.0*BIT_PER;               00003250
168    1   3            N1=FLOOR((GMT_OF_SUBCOM-LAST_RIP)/SP);                         00003260
169    1   3            GMT_TEST1=LAST_RIP+N1*SP-GMT_OF_SUBCOM;                        00003270
```

```
STMT LEV NT

 226   1  1          DOY=DD;
 227   1  1           DO I=1 TO 2 BY 1;
 228   1  2           DO J=1 TO 128 BY 1;
 229   1  3           IF NUM(I,J)=0.0 THEN MEAN(I,J)=0.0;
 230   1  3           ELSE MEAN(I,J)=COUPER(I,J)/NUM(I,J);
 231   1  3           END;  END;
 233   1  1          PUT SKIP EDIT('DAY = ',DD)(A,F(6,0));
 234   1  1          PUT SKIP EDIT('INITIAL TIME= ',INIT_TIME/1000.)(A,F(15,3));
 235   1  1          P=INIT_TIME/3.6E+06;
 236   1  1          IH=FLOOR(P);
 237   1  1          Q=60.0*(P-IH);
 238   1  1          IM=FLOOR(Q);
 239   1  1          R=60.0*(Q-IM);
 240   1  1          IS=FLOOR(R);
 241   1  1          PUT EDIT(IH,IM,IS)(F(6),F(6),F(6));
 242   1  1          PUT SKIP EDIT('END TIME = ',END_TIME/1000.)(A,F(18,3));
 243   1  1          P=END_TIME/3.6E+06;
 244   1  1          IH=FLOOR(P);
 245   1  1          Q=60.0*(P-IH);
 246   1  1          IM=FLOOR(Q);
 247   1  1          R=60.0*(Q-IM);
 248   1  1          IS=FLOOR(R);
 249   1  1          PUT EDIT(IH,IM,IS)(F(6),F(6),F(6));
 250   1  1          PUT SKIP EDIT('TOTAL TIME = ',TOTAL_TIME)(A,F(15,3));
 251   1  1          PUT SKIP EDIT('BIT RATE = ',BIT_RATE)(A,F(6,0));

 252   1  1          OUTPUT=LOGISTICS,BY NAME;
 253   1  1          WRITE FILE(FILE) FROM(OUTPUT);

 254   1  1          START_TIME=GMT_START;
 255   1  1          IF IEND=1 THEN GO TO TAIL;
 256   1  1          SIGNAL=SIGNAL-1;
 257   1  1          IF SIGNAL<1 THEN GO TO TAIL;
 258   1  1          GO TO CHIN;
 259   1  1   TAIL:  CLOSE FILE(FILE4);
 260   1  1          CLOSE FILE(FILE);
 261   1  1          END; /*III LOOP*/
 262   1  0          END PROG;
```

```
STMT LEV NT

170   1  3          GMT_TEST2=GMT_TEST1+SP;
171   1  3          IF ABS(GMT_TEST1)>RIP_TOL & ABS(GMT_TEST2)>RIP_TOL THEN DO;
172   1  4          IF ABS( GMT_TEST1+24000.0*BIT_PER)>RIP_TOL
                    & ABS( GMT_TEST2+24000.0*BIT_PER)>RIP_TOL THEN DO;
173   1  5              CSRS=(ENG(J,K)&'000011'B)-N1;
174   1  5    TES1:     IF CSRS<0 THEN DO;
175   1  6                 CSRS=CSRS+4;
176   1  6                 GO TO TES1;
177   1  6                 END;
178   1  5              GO TO CRNK; END;
180   1  4                                    END;
181   1  3          END;

182   1  2  CRNK:   DO K=1 TO 128;        /* ENDS AT LAST */
183   1  3          IF F(J,K)='0'B & DQ(J,K)='11'B THEN GO TO FAIR;
184   1  3                                        ELSE GO TO LOO;
185   1  3  FAIR:   GMT_SCID=GMT_OF_SCID(J,K);
186   1  3          IF GMT_SCID>NR1 THEN DO;
187   1  4          NR2S=NR2;
188   1  4              LAST_RIP=NEXT_RIP;
189   1  4              NEXT_RIP=LAST_RIP+SP;
190   1  4              NR1=FIXED(NEXT_RIP+DEL_TIME,31,0)-RIP_TOL;
191   1  4              NR2=NR1+RIP_TOL2;
192   1  4              CSRS=CSRS+1;
193   1  4              IF GMT_SCID<NR2S THEN GO TO LAST;
194   1  4              END;
195   1  3          WORD=WORD55(J,K)||WORD56(J,K);
196   1  3          C=(WORD&'000000111110000'B)/10000B;
197   1  3          X=WORD&'000000000001111'B;
198   1  3          IF X=0 THEN COUNTS=C;
199   1  3                 ELSE COUNTS=(2**(15-X))*(32+C);
200   1  3          L=((CSRS&'000000000000010'B)/10B)+1;
201   1  3          COUNTS=COUNTS/(1.0-COUNTS*DEAD);

202   1  3          M=FIXED(((GMT_SCID-DEL_TIME_PRIME-LAST_RIP)/ROLL)+1.5) + FANG;
203   1  3  TEST1:  IF M>128 THEN DO; M=M-128; GO TO TEST1; END;
207   1  3  TEST2:  IF M<1 THEN DO; M=M+128; GO TO TEST2; END;
211   1  3          WEIGHT=1./(2.*NI+1.);
212   1  3          WEIGHT_COUNT=WEIGHT*COUNTS;
213   1  3          WEIGHT_NUM=WEIGHT*FRAME_PER;
214   1  3               DO JSP=-NI TO NI BY 1;
215   1  4               MSP=M+JSP;
216   1  4               MSP=MOD(MSP,128);
217   1  4               IF MSP=0 THEN MSP=128;
218   1  4               COUPER(L,MSP)=COUPER(L,MSP)+WEIGHT_COUNT;
219   1  4               NUM(L,MSP)=NUM(L,MSP)+WEIGHT_NUM;
220   1  4               END;
221   1  3          TOTAL_TIME = TOTAL_TIME + FRAME_PER;
222   1  3  LAST:   END; /*END FOR 128 LOOP*/
223   1  2  LOO:    GMT_START=GMT_START+128000.0*FRAME_PER;
224   1  2          END;

225   1  1  OUTP:   END_TIME=GMT_START;
```

C. DEFINITION OF COMPUTER PROGRAM VARIABLES

The following is a list of variables used in the program given in the last section.

File 1 - Logistics File - Variable Definitions

HEADER 1	Characters 1-14
ACQUISITIONS	Characters 15-30
HEADER 2	Characters 31-48
GENERATION	Characters 49-96
DSIF	Characters 97-120
BIT-RATES	Characters 121-240
FORMATS	Characters 241-360
MODES	Characters 361-380
TIMES	Characters 381-412
SEQUENCE	Characters 413-433
FILL 1	Characters 434-480 (not used)

File 2 - Command File - Variable Definitions

COMMANDS - Structured array of 1200 characters with 10 LOGICAL RECORDS of 120 characters each mode up of:

N	Characters 1-8 - number of commands
COMD	Characters 9-118 - command nneumonics
FILL 2	Characters 119-120 (not used)

File 3 - Spacecraft Attitude Data - Variable Definitions

TRAJ	Structured array of 1200 characters named
ENTRY	array containing the following variables:
DAY	Word 1 (DOY)
MSEC	Word 2 (GMT)
FILL 3	Word 3 (SPARE)
FILL 4	Bits 1-30 of Word 4 } (FLAG)
FLAG	Bits 31-32 of Word 4 } (FLAG)
CLONG	Word 5 (CLON)
CLAT	Word 6 (CLAT)
CKAH	Word 7 (CKAH)
CKAS	Word 8 (CKAS)
FILL 5	Word 9-10 (SPARE)

File 4 - Experimental Data Record - Variable Definitions

UV DATA	Structured array of 4300 bytes	
TRACK	Structure array	
GMT	Word 1 (GMT)	
DD	Word 2 (DOY)	
TCF	Word 3 (TCF)	
FILL 6	Bits 1-30 of Word 4	(AREFSELS)
AREF	Bits 31-32 of Word 4	
SNR	Word 5 (SNR)	
FILL 7	Bits 1-24 of Word 6	(DSS)
DSS	Bits 25-32 of Word 6	
FILL 8	Bits 1-28 of Word 7	(BIT RATE)
BPSI	Bits 29-32 of Word 7	
FILL 9	Bits 1-24 of Word 8	(MOD-FMT)
MODE	Bits 25-27 of Word 8	
FMT	Bits 28-32 of Word 8	
RTLT	Word 9 (RTLT)	
ESC	Word 10 (ESC Subcom ID)	
FILL 10	Bits 1-20 of Word 11	(ASTDLYC)
STAR-DELAY	Bits 21-32 of Word 11	

File 4 - Experiment Data Record

SUBCOM	Structural array - repeated 4 times	
SCRAFT	First structured element made up of	
FILL 11	Bits 1-6 of Word 12	(ARIPPHEC)
FLAG 4	Bits 7-8 of Word 12	
FILL 12	Bits 9-14 of Word 12	(SPF)
FLAG 3	Bits 15-16 of Word 12	
FILL 13	Bits 17-22 of Word 12	(ASPNPDC)
FLAG 2	Bits 23-24 of Word 12	
FILL 14	Bits 25-30 of Word 12	(RAT)
FLAG 1	Bits 21-32 of Word 12	
RAT	Word 13 (Roll Attitude Timer)	
SPIN-PER	Word 14 (ASPNPDC - Spin Period)	
FILL 15	Bits 1-29 of Word 15	(SPF)
SPF	Bits 30-32 of Word 15	
PHASE-ERROR	Word 16	(ARIPPHEC)
GMT-OF-C112	Word 17 (Time of Roll Attitude Timer)	
BUS-VOLTAGE	Word 18 (DC Bus Voltage)	
BUS-CURRENT	Word 19 (DC Bus Current)	
FILL 16	Bits 1-4 of Word 20	(Power Status - GMT of Power Status
C-124	Bits 5 of Word 20	
GMT-OF-C124	Bits 6-32 of Word 20	
PT	Word 21 (S/C Platform Temperature)	

File 4 - Experiment Data Record

SCIENCE	Second structured element repeated 128 times	
F	Bit 1 of Word 22 (Fill indicator)	
DQ	Bits 2-3 of Word 22 (Data Quality Indicator)	
GMT-OF-SCID	Bits 4-32 of Word 22 (GMT of SCID)	
FILL 17	Bit 1-2 of Word 23	
ENG	Bits 3-8 of Word 23 (CSRS Status)	
FILL 18	Bits 9-13 of Word 23	(DATA)
WORD 55	Bits 14-16 of Word 23	
FILL 19	Bits 17-18 of Word 23	(DATA)
WORD 56	Bits 19-24 of Word 23	
FILL 20	Bit 25 of Word 23	(SCID NUMBER)
SCID	Bits 26-32 or Word 23	

Output Variables

OUTPUT	Structured array of 1330 bytes.
HEADER 1	Characters 1014 from File 1
HEADER 2	Characters 31-48 from File 1.
FORMATS	Characters 241-360 from File 1
TIMES	Characters 381-412 from File 1
FILL 21	8 blank characters
SNRA	1 blank word
START-TIME	Start time of data accumulation cycle in msec.
END-TIME	End time of data accumulation cycle in msec.
TOTAL-TIME	Total time of data accumulation cycle in sec.
FILL 22	88 blank characters.
AVERAGES	Array of (2,128) where the accumulated counts for both channels given for 128 bins is stored.
MEANS	
MEAN	
FILL 23	2 blank characters
DOY	DD - Word 2 of File 4.

Other Program Variables

BIT-PER	Time required to transmit one bit of data from the spacecraft time given in seconds.
BIT-RATE	Rate of data transmission from spacecraft. Given in bits/second. See File 4 - Table 2.
BPS	Equals BPS1. See File 4 - Experment Data Record Variable Definitions.
C	Mantessa value of data counts. See Part I - Section on Data Decompression.
COUNTS	Value for the data counts. See Part I - Section on Data Decompression.
COUPER	Accumulator where counts are stored for 128 bins and 2 channels.
CSRS	Channel status - Roll status. See Part I - Section on Channel determination.
DEAD	Dead time of the discriminator for collection interval
DEL-ANGLE	Angle offset between RIP and USC/UV instrument. Given in degrees.
DEL-TIME	Time between a GMT-OF-SCID and the next PWG. Given in seconds. See introduction to computer program.
DEL-TIME-PRIME	Time between a GMT-OF-SCID and the middle of the data accumulation period. See introduction to computer program.
DELT	Total angular offset from 0° to the middle of the data accumulation period. Given in milliseconds. See introduction to computer program.

Program Variables

DELT1	Angular offset due to star sensor. Given in degrees. See introduction to computer program.
END-TIME	Ending time of the data accumulation period for variable MEANS. Given in milliseconds.
FANG	Equals DELT. Value given in bins instead of degrees. See introduction to computer program.
FF1	Equals '1' if FLAG1 is okay '0' if FLAG1 is bad
FF3	Equaks '1' if FLAG3 is okay '0' if FLAG 3 is bad
FF4	Equals '1' if FLAG4 is okay '0' if FLAG 4 is bad

See File 4 - Experiment Data Record - Variable Definitions.

FRAME-PER	Time to transmit one frame of data from the spacecraft. Given in seconds. See introduction to computer program.
GMT-OF-SUBCOM	Time of the subcommunicator. Given in milliseconds. See introduction to computer program.
GMT-SCID	Equals GMT-OF-SCID. See File 4 - Experiment Data Record - Variable Definitions
GMT-START	Starting time of the data accumulation period for variable MEANS. Given in milliseconds.
GMT-TEST1	Time used to test sync of CSRS value with ENG value. See introduction to computer program.
GMT-TEST2	Time used to test sync of CSRS value with ENG value. See introduction to computer program.

Program Variables

I	Index variable
IDAY	Index for day used in File 3 - Attitude Data Records
IDENT	Index for number of files read into the program.
IEND	Flag to indicate end of File 4 data processing.
IH	Hours (Used in output of INIT-TIME and END-TIME).
III	Index for number of day's to process in the program.
IM	Minutes (Used in output of INIT-TIME and END-TIME).
INIT-TIME	Equals GMT-START. Saved for output purposes. Given in milliseconds.
IS	Seconds (Used in output of INIT-TIME and END-TIMEO
J	Index variable
JSP	Index variable
K	Index variable
L	Channel status indicator '1' - "Hydrogen" (Long wavelength) '2' - "Helium" (short wavelength)
M	Bin number for center of data collection interval. See introduction to computer program.
MSP	Bin numbers of data collection interval. See introduction to computer program.

Program Variables

NEXT-RIP	Time of next RIP pulse given in milliseconds. See introduction to computer program.
NI	Total number of bins for which data has been stored over the collection interval. See MSP.
NO-OF-DAYS	Total number of days to process with the program.
NRI	Time of left end of RIP pulse given in milliseconds. See introduction to computer program.
NR2	Time of right end of RIP pulse given in milliseconds. See introduction to computer program.
NR2S	Equals NR2 (saved variable)
NUM	Accumulation where total times are stored for 128 bins and 2 channels. See COUPER
N1	Number of spin periods between the last RIP pulse and a GMT-OF-SCID.
P	Equals INIT-TIME. Given in seconds.
PE	Equals PASE-ERROR. See File 4 - Experiment Data Record - Variable Descriptions.
Q	An INIT-TIME output variable
R	An INIT-TIME output variable
RIP-TIME	Time of a RIP pulse given in milliseconds. See introduction to computer program.
RIP-TOL	Tolerance of a RIP pulse. Half-width. See introduction to computer program.
RIP-TOL2	Tolerance of a RIP pulse. Full-width. See introduction to computer program.

Program Variables

ROLL	Time required for spacecraft to move 1 bin's distance. Given in milliseconds.
SIGNAL	Total number of data accumulation periods to process for MEAN
SP	Equals SPIN-PER given in milliseconds
SPSG	Equals SPF - See File 4 - Experiment Data Record - Variable Descriptions
STAR 1	Equals STAR-DELAY See File 4 - Experiment Data Record - Variable Description
STK	Converts STAR1 to ms
WEIGHT	Weighing factor for how much of the data goes into each bin.
WEIGHT-COUNT	Weighted count factor of how many counts goes into one bin.
WEIGHT-NUM	Weighted time factor of how much time is spent in one bin.
WORD	Combination of C & X. See Part I - Section on Data Decompression.
X	Exponent part of data counts. See Part I - Section on Data Decompression.

Subroutines and Functions Used

ABS	Returns absolute value of an argument
CEIL	Returns smallest integer that is = or > the argument
FIXED	Converts floating-point number to fixed-point
FLOOR	Returns smallest integer that is = or < the argument
MOD	Performs mod arithmetic on two arguments
SIGN	Returns the sign of an argument
SUBSTR	Extracts characters from a string of characters.

See "PL/I (F) Language Reference Manual"
IBM System Reference Library
Order #GG28-8201-4

LABEL CONSTANTS

BEGN,

CHIN,

CRNK,

FAIR,

F2,

F3,

F4,

LAST,

LOO,

OUT,

OUTP

PROG,

R4,

TAIL,

TEST1,

TEST2,

TES1.

LIST OF FIGURES

1. Spectral sensitivity of the two channel ultraviolet photometer of the University of Southern California on board both Pioneer 10 and 11.
2. Viewing geometry of the photometer.
3. Schematic Diagram of the UV Instrument.
4. Algorithm to Decompress Telemetry Data
5. Format A Word Assignments
6. Time Reference Definition
7. Formats E-1 and E-2 Spacecraft Words
8. Rip Time Determination

LIST OF TABLES

1. USC XUV Photometer Instrument Parameters
2. Data Sampling Rate for Science Subcomm Words
3. DSS Codes (Source Codes)
4. Rate of Data Transmission from Spacecraft (Binary)
5. Format ID Assignments
6. Quality Indicator (Binary)

HEX DUMP OF D-080583.PG036

05/03/86 - 05/06/86

FILE 11 RECORD 1 4300 BYTES

day 2, 1986

(0)	03178C7E	00000021	00000000	00000002	41208000	0000000C	00000001	00000008	013C52F0	00000000
(40)	00000126	00000000	41590000	4175836B	00000006	00000000	03189B7D	421BEC60	411E581D	0B19B53A
(80)	41B2FFE0	63178C7E	00000000	6317A3EE	00000001	6317BB5E	00031E02	6317D2CE	00012E03	6317EA3E
(120)	00001004	631801AE	00000005	6318191E	00000006	6318308E	00041E07	BFFFFFFF	FFFFFFFF	63185F6E
(160)	00001009	631876DE	0000200A	63188E4E	0000200B	6318A5BE	00051E0C	6318BD2E	00033E0D	6318D49E
(200)	0000100E	6318EC0E	0000000F	63190376	00000010	63191AEE	00041E11	6319325E	00030E12	631949CE
(240)	00000013	6319613E	00000014	631978AE	00012E15	6319901E	00032E16	6319A78E	20032E17	6319BEFE
(280)	00000018	6319D66E	00002019	6319EDDE	00043E1A	631A054E	00040E1B	631A1CBE	00030E1C	631A342E
(320)	0000001D	631A4B9E	0000001E	631A630E	00051E1F	631A7A7E	00042E20	631A91EE	00042E21	631AA95E
(360)	00001022	631AC0CE	00000023	631AD83E	00050E24	631AEFAE	00031E25	631B071E	00020E26	631B1E8E
(400)	00001027	631B35FE	00001028	631B4D6E	00022E29	631B64DE	00030E2A	631B7C4E	00050E2B	631B93BE
(440)	0000102C	631BAB2E	0000102D	631BC29E	00033E2E	631BDA0E	00040E2F	631BF17E	00002030	631C08EE
(480)	00000031	631C205E	00000032	631C37CE	00043E33	631C4F3E	00030E34	631C66AE	00001035	631C7E1E
(520)	00001036	631C958E	02000037	631CACFE	00020E38	631CC46E	00041E39	631CDBDE	0000103A	631CF34E
(560)	0000103B	631D0ABE	0000203C	631D222E	00032E3D	631D399E	00040E3E	631D510E	0000003F	631D687E
(600)	00002040	631D7FEE	00000041	631D975E	00033E42	631DAECE	00020E43	631DC63E	00000044	631DDDAE
(640)	00002045	631DF51E	00033E46	631E0C8E	00040E47	631E23FE	35021E48	631E3B6E	00000049	631E52DE
(680)	0000004A	631E6A4E	00030E4B	631E81BE	00043E4C	631E992E	00023E4D	631EB09E	0000104E	631EC80E
(720)	0000104F	631EDF7E	00023E50	631EF6EE	00041E51	631F0E5E	00033E52	631F25CE	00001053	631F3D3E
(760)	00000054	631F54AE	00023E55	631F6C1E	00033E56	631F838E	20052E57	631F9AFE	00000058	631FB26E
(800)	00000059	631FC9DE	00040E5A	631FE14E	00033E5B	631FF8BE	0000005C	6320102E	0000105D	6320279E
(840)	0000105E	63203F0E	00052E5F	6320567E	00023E60	63206DEE	00001061	6320855E	00001062	63209CCE
(880)	00000063	6320B43E	00031E64	6320CBAE	00053E65	6320E31E	00000066	6320FA8E	00001067	632111FE
(920)	00000068	6321296E	00041E69	632140DE	00032E6A	6321584E	0000306B	63216FBE	0000206C	6321872E
(960)	0000106D	63219E9E	00033E6E	6321B60E	00032E6F	6321CD7E	00000070	6321E4EE	00001071	6321FC5E
(1000)	00000072	632213CE	00041E73	63222B3E	00053E74	632242AE	00001075	63225A1E	00002076	6322718E
(1040)	03043E77	632288FE	00021E78	6322A06E	00051E79	6322B7DE	0000207A	6322CF4E	0000007B	6322E6BE
(1080)	00033E7C	6322FE2E	00042E7D	6323159E	00051E7E	63232D0E	0000107F	00000000	41590000	4175836B
(1120)	00000006	00000000	03189B7D	421BEC60	45F42400	FFFFFFFF	41B2FFE0	6323447E	00001000	63235BEE
(1160)	00052E01	6323735E	00040E02	63238ACE	00033E03	6323A23E	00001004	6323B9AE	00001005	6323D11E
(1200)	00031E06	6323E88E	00032E07	6323FFFE	35043E08	6324176E	00001009	63242EDE	0000000A	6324464E
(1240)	00032E0B	63245DBE	00031E0C	6324752E	0000000D	63248C9E	0000200E	6324A40E	0000100F	FFFFFFFF
(1280)	FFFFFFFF	FFFFFFFF	FFFFFFFF	FFFFFFFF	FFFFFFFF	FFFFFFFF	FFFFFFFF	FFFFFFFF	FFFFFFFF	FFFFFFFF
(1320)	FFFFFFFF	FFFFFFFF	FFFFFFFF	FFFFFFFF	FFFFFFFF	FFFFFFFF	FFFFFFFF	FFFFFFFF	FFFFFFFF	FFFFFFFF
(1360)	FFFFFFFF	FFFFFFFF	FFFFFFFF	FFFFFFFF	FFFFFFFF	FFFFFFFF	FFFFFFFF	FFFFFFFF	FFFFFFFF	FFFFFFFF
(1400)	FFFFFFFF	FFFFFFFF	FFFFFFFF	FFFFFFFF	FFFFFFFF	FFFFFFFF	FFFFFFFF	FFFFFFFF	FFFFFFFF	FFFFFFFF
(1440)	FFFFFFFF	FFFFFFFF	FFFFFFFF	FFFFFFFF	FFFFFFFF	FFFFFFFF	FFFFFFFF	FFFFFFFF	FFFFFFFF	FFFFFFFF
(1480)	FFFFFFFF	FFFFFFFF	FFFFFFFF	FFFFFFFF	FFFFFFFF	FFFFFFFF	FFFFFFFF	FFFFFFFF	FFFFFFFF	FFFFFFFF
(1520)	FFFFFFFF	FFFFFFFF	FFFFFFFF	FFFFFFFF	FFFFFFFF	FFFFFFFF	FFFFFFFF	FFFFFFFF	FFFFFFFF	FFFFFFFF
(1560)	FFFFFFFF	FFFFFFFF	FFFFFFFF	FFFFFFFF	FFFFFFFF	FFFFFFFF	FFFFFFFF	FFFFFFFF	FFFFFFFF	FFFFFFFF
(1600)	FFFFFFFF	FFFFFFFF	FFFFFFFF	FFFFFFFF	FFFFFFFF	FFFFFFFF	FFFFFFFF	FFFFFFFF	FFFFFFFF	FFFFFFFF
(1640)	FFFFFFFF	FFFFFFFF	FFFFFFFF	FFFFFFFF	FFFFFFFF	FFFFFFFF	FFFFFFFF	FFFFFFFF	FFFFFFFF	FFFFFFFF
(1680)	FFFFFFFF	FFFFFFFF	FFFFFFFF	FFFFFFFF	FFFFFFFF	FFFFFFFF	FFFFFFFF	FFFFFFFF	FFFFFFFF	FFFFFFFF
(1720)	FFFFFFFF	FFFFFFFF	FFFFFFFF	FFFFFFFF	FFFFFFFF	FFFFFFFF	FFFFFFFF	FFFFFFFF	FFFFFFFF	FFFFFFFF
(1760)	FFFFFFFF	FFFFFFFF	FFFFFFFF	FFFFFFFF	FFFFFFFF	FFFFFFFF	FFFFFFFF	FFFFFFFF	FFFFFFFF	FFFFFFFF
(1800)	FFFFFFFF	FFFFFFFF	FFFFFFFF	FFFFFFFF	FFFFFFFF	FFFFFFFF	FFFFFFFF	FFFFFFFF	FFFFFFFF	FFFFFFFF
(1840)	FFFFFFFF	FFFFFFFF	FFFFFFFF	FFFFFFFF	FFFFFFFF	FFFFFFFF	FFFFFFFF	FFFFFFFF	FFFFFFFF	FFFFFFFF
(1880)	FFFFFFFF	FFFFFFFF	FFFFFFFF	FFFFFFFF	FFFFFFFF	FFFFFFFF	FFFFFFFF	FFFFFFFF	FFFFFFFF	FFFFFFFF
(1920)	FFFFFFFF	FFFFFFFF	FFFFFFFF	FFFFFFFF	FFFFFFFF	FFFFFFFF	FFFFFFFF	FFFFFFFF	FFFFFFFF	FFFFFFFF
(1960)	FFFFFFFF	FFFFFFFF	FFFFFFFF	FFFFFFFF	FFFFFFFF	FFFFFFFF	FFFFFFFF	FFFFFFFF	FFFFFFFF	FFFFFFFF
(2000)	FFFFFFFF	FFFFFFFF	FFFFFFFF	FFFFFFFF	FFFFFFFF	FFFFFFFF	FFFFFFFF	FFFFFFFF	FFFFFFFF	FFFFFFFF
(2040)	FFFFFFFF	FFFFFFFF	FFFFFFFF	FFFFFFFF	FFFFFFFF	FFFFFFFF	FFFFFFFF	FFFFFFFF	FFFFFFFF	FFFFFFFF
(2080)	FFFFFFFF	FFFFFFFF	FFFFFFFF	FFFFFFFF	FFFFFFFF	FFFFFFFF	FFFFFFFF	FFFFFFFF	FFFFFFFF	FFFFFFFF
(2120)	FFFFFFFF	FFFFFFFF	FFFFFFFF	FFFFFFFF	FFFFFFFF	FFFFFFFF	FFFFFFFF	FFFFFFFF	FFFFFFFF	FFFFFFFF
(2160)	FFFFFFFF	FFFFFFFF	FFFFFFFF	FFFFFFFF	FFFFFFFF	FFFFFFFF	FFFFFFFF	FFFFFFFF	FFFFFFFF	FFFFFFFF

APF001
D-54477
03/11/72 - 05/01/72

RECORD 1 OF FILE 11
LENGTH = 4300 BYTES

000001C4	00000042	00000000	00000002	41700000	0000002A	00000005	00000018	0000A3AC	FFFFFFFF
00000000	00000200	45F42400	41C5F35D	00000006	C15DC000	FFFFFFFF	45F42400	45F42400	FFFFFFFF
424978AC	BFFFFFFF	FFFFFFFF	BFFFFFFF	FFFFFFFF	BFFFFFFF	FFFFFFFF	BFFFFFFF	FFFFFFFF	BFFFFFFF
FFFFFFFF	BFFFFFFF	FFFFFFFF	BFFFFFFF	FFFFFFFF	BFFFFFFF	FFFFFFFF	BFFFFFFF	FFFFFFFF	BFFFFFFF
FFFFFFFF	BFFFFFFF	FFFFFFFF	BFFFFFFF	FFFFFFFF	BFFFFFFF	FFFFFFFF	BFFFFFFF	FFFFFFFF	BFFFFFFF
FFFFFFFF	BFFFFFFF	FFFFFFFF	BFFFFFFF	FFFFFFFF	BFFFFFFF	FFFFFFFF	BFFFFFFF	FFFFFFFF	BFFFFFFF
FFFFFFFF	BFFFFFFF	FFFFFFFF	BFFFFFFF	FFFFFFFF	BFFFFFFF	FFFFFFFF	BFFFFFFF	FFFFFFFF	BFFFFFFF
FFFFFFFF	BFFFFFFF	FFFFFFFF	BFFFFFFF	FFFFFFFF	BFFFFFFF	FFFFFFFF	BFFFFFFF	FFFFFFFF	BFFFFFFF
FFFFFFFF	BFFFFFFF	FFFFFFFF	BFFFFFFF	FFFFFFFF	BFFFFFFF	FFFFFFFF	BFFFFFFF	FFFFFFFF	BFFFFFFF
FFFFFFFF	BFFFFFFF	FFFFFFFF	BFFFFFFF	FFFFFFFF	BFFFFFFF	FFFFFFFF	BFFFFFFF	FFFFFFFF	BFFFFFFF
FFFFFFFF	BFFFFFFF	FFFFFFFF	BFFFFFFF	FFFFFFFF	BFFFFFFF	FFFFFFFF	BFFFFFFF	FFFFFFFF	BFFFFFFF
FFFFFFFF	BFFFFFFF	FFFFFFFF	BFFFFFFF	FFFFFFFF	BFFFFFFF	FFFFFFFF	BFFFFFFF	FFFFFFFF	BFFFFFFF
FFFFFFFF	BFFFFFFF	FFFFFFFF	BFFFFFFF	FFFFFFFF	BFFFFFFF	FFFFFFFF	BFFFFFFF	FFFFFFFF	BFFFFFFF
FFFFFFFF	BFFFFFFF	FFFFFFFF	BFFFFFFF	FFFFFFFF	BFFFFFFF	FFFFFFFF	BFFFFFFF	FFFFFFFF	BFFFFFFF
FFFFFFFF	BFFFFFFF	FFFFFFFF	BFFFFFFF	FFFFFFFF	BFFFFFFF	FFFFFFFF	BFFFFFFF	FFFFFFFF	BFFFFFFF
FFFFFFFF	BFFFFFFF	FFFFFFFF	BFFFFFFF	FFFFFFFF	BFFFFFFF	FFFFFFFF	BFFFFFFF	FFFFFFFF	60000104
0006084F	600004B2	000E1E50	60C007A0	00071851	60000A8E	00001752	60000D7C	00002753	60001C6A
00010754	60001358	00023755	60001E46	00043756	60001934	3C061757	60001C22	00063758	60001F10
0006275B	6000021FE	000607EA	60C024EC	00C5075B	600027DB	0003375C	60002AC9	00022750	60002DB7
0000275E	600030A5	00071E5F	60003393	00061860	60003681	00063861	6000396F	00073862	60003C5D
00003763	60003F4B	00002764	60004239	00020765	60004527	00040766	60004815	00053767	60004B03
00063768	60004DF1	000E276B	60C050DF	00C6176A	600053CD	0005376B	600056BB	000427 6C	60005 9A9
00012D6D	60005C97	00010D6E	60C05FE5	00C61E6F	60006273	00032E70	60006561	00013E71	60006E4F
00051E72	60006B3D	000E2E73	60C06E2B	00001D74	60007119	00002D75	60007407	00013D76	60007FF5
02030D77	600079E3	00032D7E	60C07CD1	00042D79	60007FBF	00041D7A	600082AD	00040D7B	60008 59C
00023D7C	60008 88A	00020D7D	60C08B78	00003D7E	60008E66	00053E7F	00000000	41B3C000	41C5F35D
00000006	C15DC000	0000B2E0	421BE400	4136D3A1	0800D590	424978AC	60009154	00040E00	60009442
00042E01	60009730	00040E02	60C0 5A1E	00C63E03	60009D0C	00063E04	60009FFA	00061E05	6000A2E8
00011D06	6000A5D6	00032D07	60C0A6C4	16020D08	6000ABB2	00042D09	6000AEA0	00041D0A	6000B18E
00040D0B	6000E47C	00020D0C	60C0B76A	00013D0D	6000BA58	0003070E	6000BD46	0001070F	6000C034
00073810	6000C322	00061E11	60C0C610	00060812	6000C8FE	00070813	6000CBEC	00001714	6000CEDA
00002715	6000D1C8	00011716	60C0D4B6	3C031717	6000D7A4	00050718	6000DA92	00062719	6000DD80
00062 71A	6000E06E	00061718	60C0E35D	00053 71C	6000E64B	00050 71D	6000E939	00032 71E	6000EC27
00020 71F	6000EF15	00002720	60C0F203	00070821	6000F4F1	00060822	6000F7DF	00062823	6000FACD
00073824	6000FDBB	00002725	60C100A9	00003726	60010397	00013727	60010685	00040728	60010973
00052729	60010C61	0006272A	60C10F4F	00061 72B	60011 23D	0006172C	60011 52B	00052 72D	60011 81S
0004172E	60011B07	00011D2F	60C11DF5	00000D30	60012 0E3	00033E31	60012 3D1	00051E32	60012 6BF
00033E33	60012 9AD	0005 2E34	60C12C9B	00060E35	60012F89	00072E36	60013277	02002D37	60013 565
00003D38	60013 853	00042D39	60C13B41	00042D3A	60013E2F	00042D3B	60014 11E	00041D3C	60014 40C
00040D3D	60014 6FA	00041D3E	60C14 5E8	00020D3F	60014CD6	00010D40	60014FC4	00062E41	60015 2B2
00061E42	60015 5A0	00051E43	60C15 E8E	00062E44	60015B7C	00062E45	60015E6A	00060E46	60016 158
00000D47	60016 446	16000D48	60C16734	00031D49	60016A22	00041D4A	60016D10	00041D4B	60016FFE
00033D4C	600172EC	00023D4D	60C175DA	00031D4E	600178C8	00030D4F	60017B86	00030750	60017EA4
00010751	60018192	00073E52	60C1E480	00061853	6001876E	00053854	60018A5C	00070855	60018C4A
00001756	600190 38	3C002757	60C19326	00010758	60019614	00030759	60019902	0005075A	60019BF0
00060758	60019EDF	000E375C	60C1A1CD	00061 75D	6001A4BB	0005375E	6001A7A9	0005075F	6001AA97
00033760	6001AD85	000217E1	60C1B073	00002762	6001B361	00063863	6001B64F	00053864	6001B93D
00061E65	6001EC2B	00073866	60C1BF19	00002767	6001C207	00003768	6001C4F5	00013769	6001C7E3
0004076A	6001CAD1	0005376B	60C1CDBF	0006276C	6001D0AD	0006176D	6001D39B	0006176E	6001D689
0005276F	6001D977	00042770	60C1DC65	00003D71	6001DF53	00062E72	6001E241	00061E73	6001E52F
00062E74	6001E81D	00031E75	60C1E80B	00062E76	6001EDF9	02061E77	6001F0E7	00062E78	6001F3D5
00000D79	6001F6C3	00020D7A	60C1F9B1	00031D7B	6001FCA0	00040D7C	6001FF8E	00043 07D	60020 27C
00042D7E	6002056A	00041D7F	60C000000	41842000	41C5F35D	00000006	C15DC000	00022964	4218E400
4136D3A1	08024C94	424978AC	60C020E58	00032D00	60020B46	00010D01	60020E34	00023D02	60021122
00071E03	60021410	00063E04	60C216FE	00051E05	600219EC	00032E06	60021CDA	00042E07	60021FC8
16062E08	600222B6	00061E09	60C225A4	00011D0A	60022892	00031D0B	60022B80	00032D0C	60022E6E
00051D0D	600231 5C	00050D0E	60C2344A	00042D0F	60023738	00013D10	60023A26	00022D11	60023D14
00030712	60024002	00011713	60C242F0	00073814	600245DE	00070815	600248CC	00060816	60024BBA
3C071817	60024EA8	00001718	60C251 96	00003719	60025485	0001171A	60025773	00030718	60025A61
0005071C	60025D4F	000617 1D	60C2603D	00C6371E	6002632B	0006271F	60026619	00053720	60026 907
00050721	60026BF5	00033722	60C26EE3	00021723	600271D1	00002724	600274BF	00071825	600277AD
00060826	60027A98	000E3827	60C27D89	00000728	60028077	00002729	60028365	0000272A	60028653
0002072E	60028941	00040 72C	60C28C2F	00060 72D	60028F1D	0006272E	60029208	0006272F	600294F9
00061730	6002 97E7	00052731	60C29AD5	00042732	60029DC3	00002D33	6002A0B1	00010D34	6002A39F
00041E35	6002A68D	00070E36	60C2A57B	02C63E37	6002AC69	00061E38	6002AF57	00071E39	6002B246
00002D3A	6002E534	00002D3B	60C2BE22	00020D3C	6002BB10	00033D3D	6002BDFE	00040D3E	6002C0EC
00050D3F	6002C3DA	00040D40	60C2C6C8	00030D41	6002C9B6	00030D42	6002CCA4	00021D43	6002CF92
00002D44	6002D280	00071E45	60C2D56E	00023E46	6002D85C	00033E47	6002DB4A	16052E48	6002DE38
00053E49	6002E126	000428 4A	60C2E414	00051E4B	6002E702	00001D4C	6002E9F0	00031D4D	6002ECDE
00033D4E	6002EFCC	00040D4F	60C2F2BA	00032D50	6002F5A8	00040D51	6002F896	00041D52	6002FB84

```
00023053 6002FE72 00030754 60030160 00010755 6003044E 00000756 6003073C 3C061857 60030A2A
00060858 60030D18 00070859 60031007 00010758 60030F58 00030758 60030E3C 00031758 60031058
00031758 60031BBF 00050758 60031EA0 00063758 60032198 00062760 60032489 00061761 60032777
00060762 60032AE8 00051763 60032D53 00033764 60033041 00020765 60033320 00001766 60033610
00071867 60033908 00061868 60033BF9 00063869 60033EE7 0000076A 60034105 0000376B 600344C3
0000276C 60034781 0002176D 60034A9F 0004176E 60034D8D 0005376F 60035078 00063770 60035369
00062771 60035657 00061772 60035945 00052773 60035C33 00042774 60035F21 00011D75 6003620F
00000D76 600364FD 02053E77 60036E8 00040E78 60036AD9 00050E79 60036DC8 00042E7A 600370B6
00000D7E 600373A4 000E2E7C 60037692 00000D7D 60037980 00012D7E 60037C6E 00023D7F 00000000
41548000 41C5F35D 00000006 C15DC000 0003A068 421BE400 4136D3A1 0803C398 424978AC 60037F5C
00043D00 6003E24A 00033D01 60038538 00043D02 60038826 00023D03 60038B14 00033D04 60038E02
00022D05 600390F0 00060EC6 60039 3DE 00063E07 600396CC 16061E08 600399BA 00023E09 60039CA8
00052E0A 60039F96 0004 3E0B 6003A284 00000D0C 6003A572 00070E0D 6003A860 00072E0E 6003AB4E
00021D0F 6003AE3C 00033D10 6003B12A 00042D11 6003B418 00041D12 6003B706 00022D13 6003B9F4
00032D14 6003ECE2 00021D15 6003BFD0 00023716 6003C2BE 3C010717 6003C5AC 00073818 6003C89A
000E2819 6003C889 0006281A 6003CE77 00072818 6003D165 0000271C 6003D453 0000271D 6003D741
00011 1E 6003DA2F 00032 1F 6003DD1D 00051720 6003E00B 00063721 6003E2F9 00063722 6003E5E7
00061723 6003E8D5 000E3724 6003EBC3 00050725 6003EEB1 00033726 6003F19F 00020727 6003F48D
00001728 6003F77B 00070E29 6003FA69 0006182A 6003FD57 00063828 60040045 0000072C 60040333
00002720 60040621 00003 2E 6004090F 0002072F 60040BFD 00042730 60040EEB 00060731 60041109
00070732 60041 C7 00062733 6004178 5 00061734 60041AA3 00051735 60041D91 00041736 60042076
02013D37 60042360 00001D38 60042658 00061E39 6004294A 00042E3A 60042C38 00040E3B 60042F26
00040E3C 60043214 000E1E3D 60043502 00073E3E 600437F0 00012D3F 60043ADE 00003D40 60043DCC
00033D41 600440BA 00031D42 60044 3A8 00053D43 60044696 00043D44 60044984 00031D45 60044C72
00033D46 60044F60 00022D47 60045 24E 16000D48 6004553C 00070E49 6004582A 00061E4A 60045B18
00032E4E 60045E06 00053E4C 60046 0F4 00063E4D 600463E2 00072E4E 600466D0 00053E4F 600469BE
00003D50 60046CAC 00023D51 60046F9A 00031D52 60047288 00060D53 60047576 00040D54 60047E64
00032D55 60047E52 00032D56 60047E40 3C023D57 6004812F 00023758 60048 1D 00010759 6004870B
00073E5A 6004B9F9 00061E5B 6004BCE7 00062E5C 6004BFD5 00070E5D 60049 2C3 00002 75E 6004E581
0000275F 6004989F 00011760 6004 9B8D 00030761 60049E7B 00050762 6004A169 00063763 6004A457
00063764 6004A745 00062765 6004AA33 00053766 6004AD21 00050767 6004B00F 00033768 6004B2FD
00020769 6004E5EE 00001 7EA 6004B8D9 00070 86B 6004BBC7 0006286C 6004BEB5 00063 86D 6004C1A3
0000076E 6004C491 000C276F 6004C77F 00003770 6004CA6D 00021771 6004CD5B 00040772 6004D049
00060773 6004D337 00063774 6004D625 00063775 6004D913 00063776 6004DC01 01053777 6004DEF0
00042778 6004E1DE 00010D79 6004E4CC 00001D7A 6004E7BA 00062E7B 6004EAA8 00043E7C 6004ED96
00030E7D 6004F084 C0042E7E 6004F372 C0013D7F
```

<

RECORD 388 OF FILE 11
LENGTH = 4300 BYTES

```
0524D1F3 C0000047 00000000 C0000002 41438000 0000002A 00000006 00000018 00008792 00001500
00000000 00000000 4190E000 41C5F1DD 00000006 C2196400 0524E278 421BE400 4136D3A1 0D24F411
424978AC 6524D1F3 C0070F00 6524D369 00022F01 6524D4E1 00020F02 6524D657 00021F03 6524D7CF
00020F04 6524D945 00032E05 6524DABD 00072F06 6524DC33 00071F07 6524DDAB 16050F08 6524DF21
00061F09 6524E099 00002E0A 6524E20F 00020E0B 6524E387 00002E0C 6524E4FD 00002E0D 6524E675
00002E0E 6524E7EC 00062F0F 6524E964 C0012E10 6524EADA 00000E11 6524EC52 00070F12 6524EDC8
00051F13 6524EF40 00062F14 6524F0B6 C0000815 6524F22E 00071916 6524F3A4 3C071917 6524F51C
00062918 6524F692 00062919 6524F80A 00071 91A 6524F980 00063918 6524FAF8 00063 91C 6524FC6E
00070 91D 6524FDE6 00070 91E 6524FF5C 00061 91F 65250 0D4 00063920 65250 24A 00053921 65250 3C2
00053922 65250538 00053923 65250 6B0 00051924 65250826 00051925 65250 99E 00053926 65250B14
00070927 65250C8C 00073928 65250E02 00003829 65250F7A 0001282A 65251 0F0 00020 82B 65251268
0002182C 65251 3DE 00021 82D 65251556 00020 82E 652516CC 00020 82F 65251844 00020830 652519BA
00020831 65251B32 00012832 65251CA8 00011833 65251E20 00002834 65251F96 00001835 65252 10E
00000836 65252284 01001E37 65252 3FC 00073938 65252572 00062939 652526EA 00061 93A 65252860
00063938 65252 9D8 00061 93C 65252 84E 00006 93D 65252CC6 00061 93E 65252E3C 00062 93F 65252FB4
00062940 65253 12A 00061941 65253 28 A 00061942 65253418 00052943 65253590 00052944 65253706
00051945 65253 87E 00050946 65253 9F4 00053947 65253B6C 16070948 65253CE2 00000849 65253E5A
0000384A 65253FD0 00012848 65254148 00021 84C 652542BE 00022 84D 65254436 00023 84E 652545AD
00020 84F 65254725 00021 E50 65254 89B 00013851 65254A13 00020852 65254889 00012853 65254C01
00010 8E4 65254E77 00003 E55 65254FEF 00002856 65255165 3E042F57 652552DD 00050F58 65255453
00002E59 65255 5CB 00033F5A 65255741 00060F5B 652558B9 00041F5C 65255A2F 00023F5D 65255EA7
00042F5E 65255D1D 00040F5F 65255E55 00061F60 65256 00B 00051F61 65256183 00053F62 65256 2F9
00052F63 65256471 00043F64 65256 5E7 00010F65 65256 75F 00022F66 652568D5 00010F67 65256A4D
00043F68 65256BC3 00022F69 65256D3B 00033F6A 65256EB1 00050F6B 65257029 00061F6C 65257 19F
00070F6D 65257317 00050F6E 65257 48D 00021E6F 65257605 00003E70 652577 7B 00013E71 65257 E3
00010E72 65257A69 00070F73 65257 8E1 00000E74 65257D57 00073F75 65257ECF 00073F76 65258045
03031F77 65258 1BD 00070F78 65258333 00072F79 652584AB 00001E7A 65258621 00030F7B 65258 799
00041F7C 65256 90F 00061F7D 65258A87 00060F7E 65258BFD 00042F7F 00000000 41792000 41C5F1DD
00000006 C219E400 05259DFA 4218F449 4136D3A1 0D25AF93 424978AC 65258D75 00040F00 65258EEB
00052F01 65259063 00041F02 65259 1D9 00073F03 65259351 00031F04 652594C7 00032F05 65259 3F
00002F06 65259 7B5 00030F07 65259 92D 16043F08 65259AA3 00072F09 65259C1B 00042F0A 65259 C91
00042F0B 65259F09 00001E0C 65259 C7F 00011E0D 6525A1F7 00002E0E 6525A36E 00000E0F 6525A4E6
00012E10 6525A65C 00020E11 6525A7D4 00050F12 6525A94A 00010E13 6525AAC2 00063F14 6525AC38
00071F15 6525ADB0 00063F16 6525AF26 3F071F17 6525B09E 00073F18 6525B214 00072919 6525B38C
0007091A 6525E502 00063 91B 6525B67A 0006291C 6525B7F0 0006091D 6525B968 0006091E 6525BADE
0006291F 6525EC56 00060920 6525BDCC 00060921 6525BF44 00053922 6525C0BA 00052923 6525C232
00053924 6525C3A8 00051925 6525C520 00052926 6525C696 00043927 6525C80E 00051928 6525C984
```

```
41AEE000  41C7E45D  00000006  C2115400  000074FE  4218E400  41356377  0800796F  4235813F  60007CC3
00002A00  60007121  00001A01  60007717  00001A02  600071DC  00001A03  6000723A  00001A04  60007298
00001A05  600072F6  00001A06  60007353  00000A07  60007381  1E000A08  6000740F  00001A09  600074ED
00001A0A  600074CA  00000A0B  60007528  00001A0C  60007586  00000A0D  600075E4  00001A0E  60007641
00001A0F  6000769F  00001A10  600076FD  00000A11  60007758  00071812  60007788  00072813  60007820
00071E14  60007876  00072815  600078DC  00072816  60007939  2C063817  60007980  00063818  600079E8
00070819  60007A49  00060B1A  60007AA6  00062B1B  60007B04  00070B1C  60007B62  00062B1D  60007BC0
00060B1E  60007C1D  00072B1F  60007C78  00071B20  60007CD9  00062B21  60007D37  00061B22  60007D94
00062B23  60007DF2  00071B24  60007E50  00062B25  60007EAE  00061B26  60007F0B  00063B27  60007F69
00070B28  60007FC7  00060B29  60008025  00062B2A  60008082  00062B2B  600080E0  00062B2C  6000813E
00053B2D  6000819C  00060B2E  60008F9  00060B2F  60008257  00060B30  60008285  00051B31  60008313
00052E32  60008370  00060B33  600083CF  00061B34  60008420  00053B35  60008488  00060B36  600084E8
01053B37  60008545  00052B38  600085A3  00051B39  60008601  00052B3A  6000865E  00051B3B  600086BC
00062B3C  6000871A  00063B3D  60008778  00052B3E  600087D5  00053B3F  60008833  00051B40  60008891
00052B41  600088EF  00050B42  6000894C  00053B43  600089AA  00060B44  60008A08  00053B45  60008A66
00052B46  60008AC3  00061B47  60008B21  1E061B48  60008B7F  00053B49  60008BDD  00060B4A  60008C3A
00053B4B  60008C98  00051B4C  60008CF6  00060B4D  60008D54  00051B4E  60008DB1  00061B4F  60008E11
00061B50  60008E6F  00060B51  60008ECD  00062B52  60008F2A  00053B53  BFFFFFFF  FFFFFFFF  BFFFFFFF
FFFFFFFF  BFFFFFFF  FFFFFFFF  60009041  2D062B57  600090FE  00062B58  6000915C  00072B59  600091BA
00061B5A  60009217  00073B5B  60009275  00060B5C  600092D3  00061B5D  60009331  00063B5E  6000938E
00071B5F  600093EC  00063B60  60009449  00072B61  600094A8  00063B62  60009505  00071B63  60009563
00070B64  600095C1  00070B65  6000961F  00071B66  6000967C  00070B67  600096DA  00000A68  60009738
00063B69  60009796  00072B6A  600097F3  00062B6B  60009851  00072B6C  600098AF  00072B6D  6000990D
00071B6E  6000996A  00072B6F  600099C8  00063B70  60009A26  00000A71  60009A84  00070B72  60009AE1
00072B73  60009B3F  00070B74  60009B9D  00073B75  60009BFB  00002A76  60009C58  01073B77  60009CB6
00001A78  60009D14  00072B79  60009D72  00000A7A  60009DCF  00000A7B  60009E2D  00000A7C  60009E8B
00001A7D  60009EE9  00073B7E  60009F46  00000A7F
```

<

RECORD 1793 OF FILE 539
LENGTH = 4300 BYTES

122

```
0509EFEA  00000074  000C0000  C0C00003  41D30000  0000003D  00000007  00000008  0004EDEC  00000600
00000000  00000000  407C0000  41C7E25D  00000006  C2138800  0509C422  4218E400  41356377  0D09C88C
4235813F  6509EFEA  00020000  6509C018  00010001  6509C075  00013002  6509C0D4  00003003  6509C132
00011004  6509C190  00002005  6509C1ED  00020006  6509C24C  00010007  6509C2AA  1E002008  6509C308
00002009  6509C365  0001300A  6509C3EE  00020008  6509C44C  0001300C  6509C4AA  0002000D  6509C507
0001000E  6509C566  0000300F  6509C5C4  00003010  6509C622  00003011  6509C67F  00021B12  6509C6DE
00012B13  6509C73C  00012B14  6509C79A  00012B15  6509C7F7  00011B16  6509C856  2C013B17  6509C8B4
00012B18  6509C912  00012B19  6509C96F  00012B1A  6509C9CE  00013B1B  6509CA2C  00010B1C  6509CA8A
00012B1D  6509CAE7  00012B1E  6509CB46  00003B1F  6509CBA4  00003B20  6509CC02  00003B21  6509CC5F
00001B22  6509CC98  00010B23  6509CCF6  00010B24  6509CD54  00003B25  6509CDB1  00010B26  6509CE10
00010B27  6509CE6E  00010B28  6509CECC  00011B29  6509CF29  00002B2A  6509CF88  00002B2B  6509CFE6
00003B2C  6509D044  00001B2D  6509D0A1  00002B2E  6509D100  00010B2F  6509D15E  00000B30  6509D1BC
00002B31  6509D219  00003B32  6509D264  00003B33  6509D2C2  00003B34  6509D320  00001B35  6509D37D
00001B36  6509D3DC  00001B37  6509D43A  00003B38  6509D498  00002B39  6509D4F5  00002B3A  6509D554
00002E3E  6509D5B2  00010B3C  6509D610  00003B3D  6509D66D  00001B3E  6509D6CC  00002B3F  6509D72A
00003E40  6509D788  00002B41  6509D7E6  00002B42  6509D844  00010B43  6509D8A2  00011B44  6509D900
00010B45  6509D95D  00000B46  6509D9BC  00002B47  6509DA1A  1E012B48  6509DA78  00012B49  6509DAD5
00010E4A  6509DB4C  00010B4B  6509DBAA  00001B4C  6509DC08  00003B4D  6509DC65  00003B4E  6509DCC4
00010B4F  6509DD22  00001E50  6509DD80  00013B51  6509DDDD  00013B52  6509DE3C  00021B53  6509DE9A
00003B54  6509DEF8  00011B55  6509DF55  00010B56  6509DFB4  2C013B57  6509E012  00011B58  6509E070
00021B59  6509E0CD  00012B5A  6509E12C  00013B5B  6509E18A  00013B5C  6509E1E8  00012B5D  6509E245
00012B5E  6509E2A4  00020B5F  6509E302  00020B60  6509E360  00021B61  6509E3BD  00013B62  6509E41C
00020B63  6509E47A  00020B64  6509E4D8  00023B65  6509E535  00020B66  6509E594  00020B67  6509E5F2
00021E68  6509E650  00013B69  6509E6AD  00013B6A  6509E6FE  00012B6B  6509E75C  00020B6C  6509E7BA
00012B6D  6509E817  00022B6E  6509E876  00013B6F  6509E8D4  00021B70  6509E932  00020B71  6509E98F
00020E72  6509E9EE  00013B73  6509EA4C  00023B74  6509EAAA  00021B75  6509EB07  00031B76  6509EB66
00023B77  6509EBC4  00013B78  6509EC22  00023B79  6509EC7F  00030B7A  6509ECDE  00023B7B  6509ED3C
00030B7C  6509ED9A  00030B7D  6509EDF7  00032B7E  6509EE56  00030B7F  00000000  407C0000  41C7E25D
00000006  C2138800  0509F2E0  4218E400  41356377  0D09F74A  4235813F  6509EEB4  00031B00  6509EF12
00023B01  6509EF6F  00020B02  6509EFCE  00030B03  6509F02C  00032B04  6509F08A  00022B05  6509F0E7
00032B06  6509F146  00033E07  6509F1A4  1E032B08  6509F202  00022B09  6509F25F  00023B0A  6509F2AC
00022E0B  6509F30A  00020B0C  6509F368  00030B0D  6509F3C5  00022B0E  6509F424  00022B0F  6509F482
00021B10  6509F4E0  00022B11  6509F53D  00020B12  6509F59C  00020B13  6509F5FA  00013B14  6509F658
00012B15  6509F685  00020B16  6509F714  2D012B17  6509F772  00010B18  6509F7D0  00013B19  6509F82D
00012E1A  6509F88C  00020B1B  6509F8EA  00013B1C  6509F948  00013B1D  6509F9A5  00013B1E  6509FA04
00021B1F  6509FA62  00011B20  6509FAC0  00012B21  6509FB1D  00011B22  6509FB7C  00012B23  6509FBDA
00010B24  6509FC38  00010B25  6509FC95  00010B26  6509FCF4  00010B27  6509FD52  00010B28  6509FDE0
00002E29  6509FE0D  00010B2A  6509FE72  00010B2B  6509FED0  00011B2C  6509FF2E  00012B2D  6509FF8B
00010E2E  6509FFEA  00002B2F  650A0048  00002B30  650A00A6  00001B31  650A0103  00001B32  650A0162
00002B33  650A01C0  00002B34  650A021E  00002B35  650A027B  00010B36  650A02DA  01011B37  650A0338
00003E38  650A0396  00001B39  650A03F3  00011B3A  650A0452  00002B3B  650A04B0  00002B3C  650A050E
00003B3D  650A056B  00010B3E  BFFFFFFF  FFFFFFFF  650B0409  00002B40  FFFFFFFF  FFFFFFFF  FFFFFFFF
FFFFFFFF  FFFFFFFF  FFFFFFFF  FFFFFFFF  FFFFFFFF  FFFFFFFF  FFFFFFFF  FFFFFFFF  FFFFFFFF  FFFFFFFF
FFFFFFFF  FFFFFFFF  FFFFFFFF  FFFFFFFF  FFFFFFFF  FFFFFFFF  FFFFFFFF  FFFFFFFF  FFFFFFFF  FFFFFFFF
FFFFFFFF  FFFFFFFF  FFFFFFFF  FFFFFFFF  FFFFFFFF  FFFFFFFF  FFFFFFFF  FFFFFFFF  FFFFFFFF  FFFFFFFF
FFFFFFFF  FFFFFFFF  FFFFFFFF  FFFFFFFF  FFFFFFFF  FFFFFFFF  FFFFFFFF  FFFFFFFF  FFFFFFFF  FFFFFFFF
```

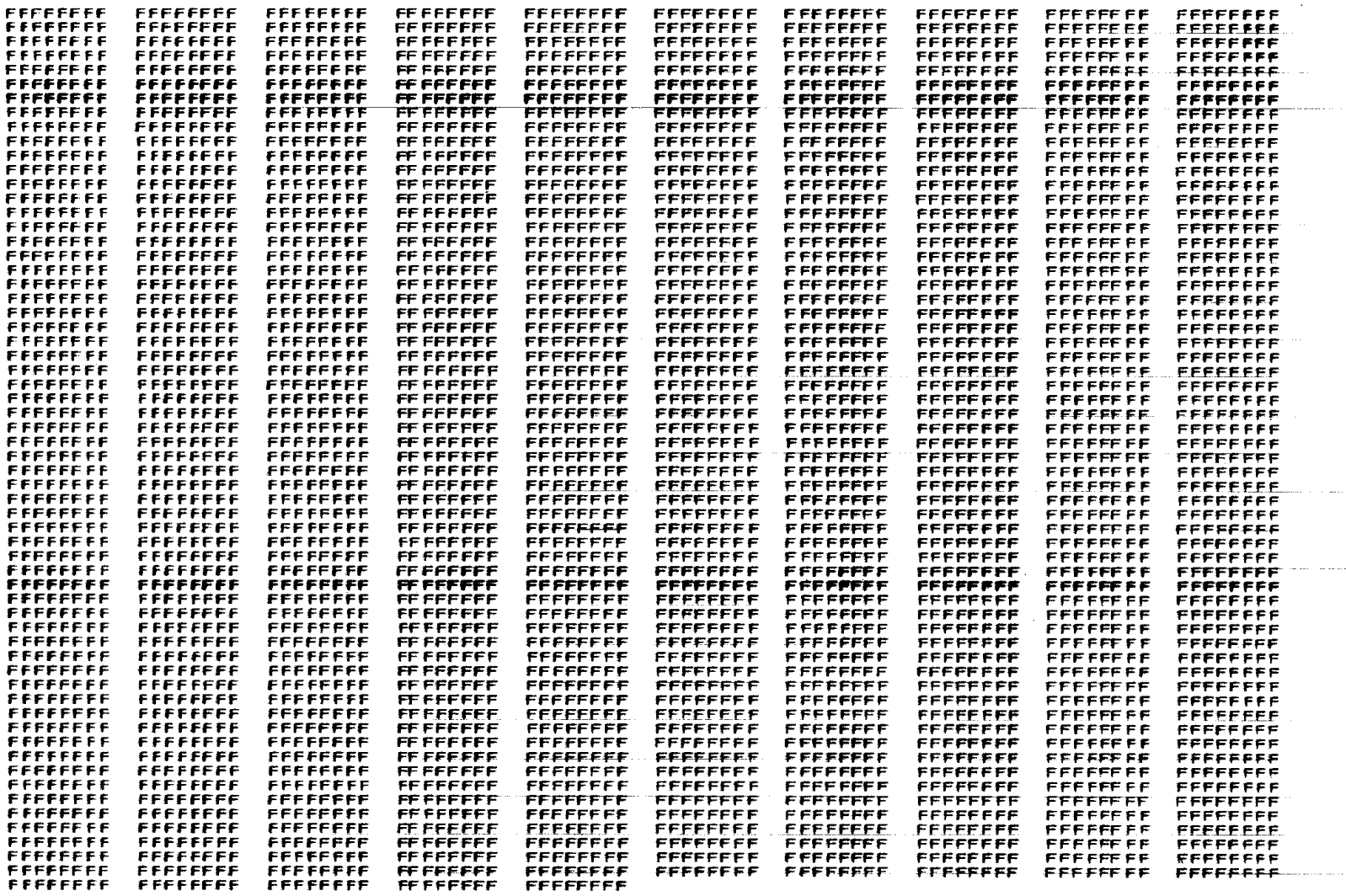

1793 RECORDS IN FILE 539 OF TAPE

APF028

05/08/81 - 05/30/81

D-56407

RECORD 1 OF FILE 2
LENGTH = 4300 BYTES

128

00000080	00000080	C0CC0000	CCCC0002	C0500000	00000002E	0CC0C002	00000008	01E22600	FFFFFFFF
CC000403	00000000	4159C0C0	41CF4EDC	C0000002	413E8000	CCCC02D9C	45F42400	41255775	0800BA7E
4223106F	EFFFFFFF	FFFFFFFF	EFFFFFFF	FFFFFFFF	BFFFFFFF	FFFFFFFF	BFFFFFFF	FFFFFFFF	EFFFFFFF
FFFFFFFF	BFFFFFFF	BFFFFFFF	BFFFFFFF	FFFFFFFF	BFFFFFFF	FFFFFFFF	600003DD	29CC60EC8	60C00F9E
0006 1E09	60001B4D	C00E3B0A	60003706	00C51B0B	600032BE	CCCE1B0C	60003E76	00C92E0D	60C04A2E
00062B0F	60005EE7	C003100F	60006 19F	00021010	60006D57	0CC2CC11	60007 90F	00C30012	6CC0E4C7
C0070013	60CCC080	C004C014	60005C38	00041015	6000A7F0	0CC42016	6000E3A8	20042017	60008F60
000F2F18	6000CB19	C00E2B19	60006D61	0006 0B1A	6000E285	0CC60B1F	6000EE41	00C51E1C	60C0F9FA
C0052F1D	600105B2	C00E3B1E	60011 16A	0005 3B1F	60011D22	0CC330 20	60012BDB	00C33021	6CC13493
CC032022	6CC140AB	C0C53023	60014C03	00032024	60015 7BB	0CC31025	60016374	00022026	60C16F2C
00033027	60017AE4	C004 1028	60018 E9C	C00E3B29	60019255	0CC61E2A	60019E0D	00C61E2B	60C1A9C5
C0060E2C	6001E57D	C00E1B2D	6001C13E	0006 0B2E	6001CCEE	0CC52E2F	6001D8A6	00070B30	60C1E45E
C0060E31	6001F016	C0033032	6CC1FECF	00013033	60020787	0CC21034	60021 33F	00030035	60021EF7
00040036	60022AB0	0303 2037	60023 6E8	00023038	60024220	0CC31039	60024D D8	00062E3A	60C25591
C0053E3B	60026549	0006 3B3C	6CC27101	0006 3B3D	60027CB9	0CC53E3E	60028871	00060B3F	60C2942A
C006 0E40	6002 9FE2	C005 1B41	6CC2AE5A	0006 0B42	6002B758	CCC31C43	6002C30B	00023044	60C2CEC3
00033045	6002DA7B	0004 1046	6002E633	00040047	6002F1EB	25C12048	6002FDA4	00032049	60C3095C
C002104A	60031514	C006 204B	6CC32CCC	C0052B4C	60032C85	0CC60B4D	60033 83D	00062B4E	6CC343F5
00063B4F	60034FAD	C005 5B5C	6CC35E65	C005 1B51	60036 71E	CCC51B52	60037 2D6	00C60B53	6CC37EEE
00033054	6003EA46	0003 1055	6003 5EFF	00030056	6003A1B7	23C40057	6003AD6F	00033058	6CC3B927
0004 0059	6003C4E0	0003 005A	6CC3DC98	0003 205B	6003DC50	0CC2305C	6003E808	00060B5D	60C3F3C0
C006 0E5E	6003FF79	C006 1B5F	6CC40E31	C005 2B60	60041 6E5	0CC62B61	600422A1	00C51E62	60C42E5A
C0053B63	60043A12	C006 0B64	60044 5CA	00022065	60045182	0CC3106E	60045D3B	00023067	60C46EF3
00030068	600474AB	C002 006 9	6CC4E063	0004 306A	60048C1E	0CC3006E	60049 7D4	00020 0EC	60C4A38C
0002206D	6004BF44	C005 0B6E	60C4EAFC	C005 3B6F	6004C6B5	CCC61E70	6004D26D	00C61E71	60C4DE26
C0053B72	6004E9DD	C005 2B73	6004F555	C005 2B74	60050148	C0051E75	60050D06	00051B76	60051BBE
02070077	60052476	0002 1078	6CC53C2F	00030079	60053BE7	0CC41C7A	60054 79F	00023 07B	60C55357
C0050 07C	60055F0F	0002 307D	60056ACB	0004 207E	60057680	CCC70B7F	00000000	40E800C0	41CF4EDC
CCC00002	413E8000	C006 09EA	421EE400	41255775	08069698	42231 0EE	60058238	00061B00	60058DF0
0006 1E01	60059 5A9	0006 2B02	6005A5E1	0005 2B03	6005B119	0CC70BC4	6005BCD1	00062E C5	6C5C889
0006 1F06	6005D442	C0CE0BC7	6005DFFA	29032008	6005EBB2	CCC40009	6005F76A	00041 00A	60C603 23
00032008	FFFFFFFF	FFFFFFFF	6CC61A93	00C4 200D	60062648	CCC23 00E	60063204	00032 00F	60063D8C
00022010	60064974	C006 1B11	6006 552C	0006 2B12	60066 0E5	0CC61B13	60066C9D	00060B14	60067E55
0005 3E15	6006 840D	0006 0B16	6CC6 6FC5	2105 3B17	6006 9E7E	0CC61B18	6006A736	00042019	60068 2EE
CC040 01A	6006EEA6	C003 201F	6CCEC A5F	C0032 01C	6006D617	CCC4C01D	BFFFFFFF	FFFFFFFF	6CC6ED67
00030 01F	6006F93F	0004 0020	60070 4F8	00031021	60071 0B0	0CC61E22	60071C68	00051E23	6CC72820
0006 0F24	600733D9	C006 0B25	6CC73F51	0006 3B26	60074E49	0CC53E27	60075701	00060B28	6CC762EA
0006 2B29	60076E72	C006 0B2A	6CC77A2A	C003 202B	60078E52	CCC2C02C	60079 19A	00C32 02D	6CC79D53
CC02302E	6007A90B	0003 102F	6CC7E4C3	0003 0030	6007C07E	0CC41031	6007CC34	00023032	6CC7D7EC
C0060F33	6007E3A4	C005 2B34	6CC7EF5C	C005 2B35	6007FB14	0CC63E36	6008 06CD	01062E37	60081265
0005 1E38	60081E3D	0005 3B39	6CC82 5E5	0007 083A	60083 5AE	CCC52B3E	60084166	00060C3C	6CC84D1E
CCC31 03D	600858D6	C003 003E	6CC86 4EF	0002 103F	60087047	0CC20040	60087BFF	00042041	6CC887B7
00043042	60089 36F	0001 2043	6CC8 9F28	C005 2B44	6008AAE0	CCC61B45	6008B658	00C63E46	6CC8C250
0006 1F47	6008CF09	2906 2B48	6CCED5C1	C006 0B49	6008E579	0CC53E4A	6008F131	00C52B4B	6CC8FCE9
C0063E4C	60090BA2	C0C3 204D	6CC9145A	C003 C04E	60092012	0CC4004F	60092CA	00023050	60093783
00032051	60094338	C002 2052	6CC94EF3	C002 2053	60095AAB	0CC41054	60096664	00052055	6CC9721C
C0052E56	60097DD4	2006 0B57	6CC9E5EC	C007 0B58	60099544	0CC53E59	6009A0FD	00070B5A	6009ACBE
C0060E5B	6009E86D	C005 3B5C	6CC9C425	C006 7B5D	6009CFDE	0CC320 5E	6009DB96	0006 105F	6009E74E
0004 0060	6009F306	C003 0061	6CC9FEEF	C003 1062	600A0A77	0CC21063	600A162F	00031064	6CCA21E7
C0040065	600A2D9F	C002 2066	6CCA3E8E	C005 2B67	600A4510	0CC53E68	600A50C8	00061B69	6CCA5C80
C0070E6A	600A6838	0006 1B6B	6CCA73F1	C005 0B6C	600A7FA9	0CC53E6D	600A8B61	00C63B6E	6CCA9715
00061E6F	600AA2D2	0003 0070	6CCAAF6A	0004 2071	600AEA42	0CC33072	600AC5FA	00C42073	6CCAD1E3
00032074	600AD96B	0004 207E	6CCAE923	C005 0076	600AF4DB	0CC31077	600E0094	00060B78	6CCB0C4C
0005 1E79	600E1804	C00E1B7A	6CCE23FC	C006 2B7B	600B2F74	0CC61B7C	600B3B2D	00C53E7D	6CCB46E5
CCC53B7E	600BE29D	0005 3B7F	00000000	41528000	41CF4EDC	0CC00002	411F4000	000EE5C7	421BE400
41255775	0800C72B9	4223106B	600BE5E5	0005 3B00	600B6A0E	0CC21001	600E75C6	00C12002	6CCBE17E
C0033003	600E6D36	0004 3004	6CCE5EEF	0004 1005	600BA4A7	0CC33006	600BE05F	00C51007	6CCBBC17
29C20008	600BC7CF	0002 100 9	6CCBD3B8	0005 0B0A	600BCF40	0CC61B0E	600BEAF8	00C62E0C	6CCBF6B0
00062E0D	600C0269	0006 0B0E	6CCC0E21	C006 3B0F	600C19D9	0CC52E10	600C2591	00C61E11	6CCC3149
00033012	600C3D02	C003 0013	6CCC4EEA	00041014	600C5472	0CC22015	600C602A	00041016	6CCC6BE3
23022017	600C779B	C0C3 301E	6CCC8363	C0023019	600C8F0B	0CC4201A	600C9AC3	00053E1B	6CCCA67C
0005 1E1C	600CE234	0006 1B1D	6CCCBDEC	0006 2B1E	600CC9A4	0CC63E1F	600CD55D	00050E20	6CCCE115
00061E21	600CECCD	C005 3B22	6CCCFE65	C003 1023	600D043E	CCC31024	600D0FF6	00022025	6CCD1EAE
C0013026	600D2766	C0C3 2027	6CCD3318	0003 2028	600D3ED7	CCC31029	EFFFFFFF	FFFFFFFF	6CCD5647
00032 02B	600D61FF	0005 1B2C	6CCD6DE8	0005 3B2D	600D7970	0CC52E2E	600D8528	00C61E2F	BFFFFFFF
FFFFFFFF	600D9C98	C005 2B31	6CCDAE51	C007 0B32	600DE405	0CC70B33	600DEFC1	00062E34	6CCDCE75
C0030035	600DD732	0003 0036	6CCDE2EA	02C23037	600DEEA2	CCC43038	600DFA5A	00C22039	6CCE0613
00032 03A	600E11CB	0002 203B	6CCE1DE3	C004 103C	600E293F	0CC63B3D	600E34F3	00C62E3E	6CCE40AC
C0060E3F	600E4C64	C006 3B40	6CCE5E1C	C006 3B41	600E63D4	0CC61E42	600E6F8D	00C60E43	6CCE7B46
C0060E44	600E86FD	C0C6 1B45	6CCE9E8E	C005 1046	600EC9E6	CCC3C047	600EAA26	29C23048	6CCEB5DE
CCC2C049	600EC196	0004 204A	6CCECC4E	0003 104B	600ED507	0CC5C04C	600EE4BF	00032 04D	6CCEF077
0003 004E	600EFC2F	C0C5 2B4F	6CCF07EE	0006 3B50	600F13A0	0CC62B51	600F1F58	00C63E52	6CCF2F10