#360

IMP-I

SUMMARY SPECTRA DATA

71-019A-15C

Table of Contents

1. Introduction

2. Errata/Change Log

3. LINKS TO RELEVANT INFORMATION IN THE ONLINE NSSDC INFORMATION SYSTEM

4. Catalog Materials

    a. Associated Documents

    b. Core Catalog Materials

---

1. INTRODUCTION:

The documentation for this data set was originally on paper, kept in NSSDC's Data Set Catalogs (DSCs). The paper documentation in the Data Set Catalogs have been made into digital images, and then collected into a single PDF file for each Data Set Catalog. The inventory information in these DSCs is current as of July 1, 2004. This inventory information is now no longer maintained in the DSCs, but is now managed in the inventory part of the NSSDC information system. The information existing in the DSCs is now not needed for locating the data files, but we did not remove that inventory information.

The offline tape datasets have now been migrated from the original magnetic tape to Archival Information Packages (AIP's).

A prior restoration may have been done on data sets, if a requestor of this data set has questions; they should send an inquiry to the request office to see if additional information exists.

2. ERRATA/CHANGE LOG:

NOTE: Changes are made in a text box, and will show up that way when displayed on screen with a PDF reader.

When printing, special settings may be required to make the text box appear on the printed output.

Version	Date	Person	Page	Description of Change
01				
02				

3 LINKS TO RELEVANT INFORMATION IN THE ONLINE NSSDC INFORMATION SYSTEM:

http://nssdc.gsfc.nasa.gov/nmc/

[NOTE: This link will take you to the main page of the NSSDC Master Catalog. There you will be able to perform searches to find additional information]

4. CATALOG MATERIALS:

a. Associated Documents To find associated documents you will need to know the document ID number and then click here.
http://nssdcftp.gsfc.nasa.gov/miscellaneous/documents/

b. Core Catalog Materials

IMP-I

SUMMARY SPECTRA ON MAG TAPE

71-019A-15C ASRA-00009

This data set has been restored. There was originally 1 Binary 9-Track, 1600 BPI tape. There is one restored tape. The DR tape is a 3480 cartridge and the DS tape is 9-track, 6250 BPI. The tape was created on an IBM 360 computer. The DR and DS number along with the corresponsing D number and the time span is as follows:

DR#	DS#	D#	FILES	TIME SPAN
DR03006	DS03006	D27597	3	04/20/71 - 09/26/72

REQ. AGENT	RAND NO.	ACQ. AGENT
CMP	RC6828	CDW

IMP-I

SUMMARY SPECTRA DATA

71-019A-15C

This data set catalog consists of 1 magnetic tape. The tape is binary, 9-track, 1600 BPI with a standard label and contains on file of data. This tape was created on an IBM 360 computer.

D#	C#	LABEL	TIME SPAN
D-27597	C-18427	Y1101	04/20/71 - 09/26/72

GSFC IMP-6 RADIO ASTRONOMY EXPERIMENT DATA SUMMARY

This document describes the basic data set compiled from the Goddard Space Flight Center radio astronomy experiment on IMP-6 (Explorer 43). The IMP-6 spacecraft was launched into a highly elliptical orbit (eccentricity of 0.94, 206000-km apogee, 354-km perigee, 4.18-day period) on March 13, 1971. The IMP-6 spacecraft was spin-stabilized with the spin axis oriented toward the South ecliptic pole and a spin rate ~ 5.5 RPM. The Goddard radio astronomy experiment operated from 13 March 1971, to 26 September 1972. The antenna used by the Goddard experiment was fully deployed on April 20, 1971, and the basic data set covers all measurements from that date until the end of the experiment lifetime (orbits 10 through 136). During this period radio measurements of the cosmic noise background and of a variety of transient sources in the solar system were obtained at frequencies between 30 kHz and 10 MHz. A description of the experiment has been published by Brown (1973), and a complete bibliography of all papers published on the results of the Goddard radio astronomy experiment is attached to this document.

The Goddard radio astronomy experiment (Fig. 1) used a 91-m dipole antenna which was comprised of two colinear, 46-m, X-axis (i.e. perpendicular to the spin axis) monopoles connected to individual wide-band high-impedance preamplifiers. The preamplifier outputs were combined in an electronic balun/power-splitter and then fed to two step-frequency, total-power radiometers. Each receiver sampled 32 discrete frequency channels once every 5.11 sec. Receiver 1 (SFR-1) operated between 30 kHz and 9.9 MHz with a crystal-controlled IF

bandwidth of 10 kHz and a post-detection integration time constant of 6 ms. Receiver 2 (SFR-2) operated between 30 kHz and 4.9 MHz with a crystal-controlled IF bandwidth of 3 kHz and post-detection integration time of 40 ms. The individual receiver channel frequencies are listed in Table 1. Each receiver had a total dynamic range of 60-dB which was divided into two 30-dB ranges in order to provide good (± 3%) amplitude resolution.

In-flight calibration was automatically performed by injecting a sequence of four noise levels (two in each receiver range) from a calibration noise source in place of the antenna signal every 2.9 hr. The long-term drift in receiver gain determined from these data was approximately - 0.5 dB during the first six months of the flight and - 1.5 dB after 16 months of operation.

The most serious instrument performance problem encountered was due to saturation level signals at the pre-amplifier input which resulted in the generation of intermodulation products in the RF amplifiers which then appeared as wide-band signals in the telemetered data. This problem was most acute when intense kilometer wavelength emissions from the terrestrial magnetosphere were observed at frequencies in the 200-300 kHz range. An example of an event with signficant intermodulation interference artifacts is shown in Figure 2.

Daily dynamic spectral plots were generated using the first 28 frequency channels of SFR-2 in the following fashion. For every 10-minute interval of data, signal intensity distributions, N(I), were calculated at each frequency by sorting the data in 1-dB bins. Then the values of the mean, minimum, and maximum signal levels as well

as the mode (most common value) of the distribution were determined for each 10-min interval at each frequency. These data were used to generate four 24-hr dynamic spectral displays which showed the variation of the average, minimum, maximum and mode of the received noise as a function of frequency and time with 10-min resolution. The intensity scale was plotted in increments of 1 dB with respect to the average background level at each frequency determined from studies of the long-term baseline level. The display format is illustrated and explained in Figures 2 and 3.

The dynamic spectral plots discussed above were generated from data contained on the IMP-6 Ten Minute Summary Tape. The contents and format of that tape are described in the appendix. In addition to the average, minimum, maximum and mode, the Ten Minute Summary Tape contains the average direction of arrival of emission at each frequency. The arrival direction was determined from the modulation pattern impressed on the data by the 5.5 RPM spin of the dipole antenna. The computation of the arrival direction was simply a Fourier fit to the data of a function proportional to $1 + \alpha \cos 2(\omega t - \phi)$ where the spin period, $1/\omega$, was precisely known, and the phase angle ϕ and level of modulation α were unknown. The Fourier fit was usually done with 12 consecutive 5.11-sec samples. The derived phase angle was then converted into a solar elongation angle, Φ, in the ecliptic plane with minus to the East and plus to the West. (Since the dipole pattern is symmetrical, the deduced arrival directions have a 180 degree ambiguity.) The 12-sample processing window was then slid forward one sample and a new Fourier fit was done. The arrival

directions characterizing each ten-minute interval are averages of the individual Fourier fits during the interval. Accompanying each arrival direction on the tape is the modulation index which is defined as

$$\alpha = \frac{S_{max} - S_{min}}{S_{max} + S_{min}}$$

where S_{max} and S_{min} are the maximum and minimum power flux predicted by the best-fit $\cos^2\theta$ modulation pattern during the processing window. Nominally α ranges from 0 to 1, but due to effects such as the use of a limited number of samples and the over-simplified assumption of constant source flux during the sample window, it often ranges from 0 to 1.5 in actual practice. The modulation index is a measure of either the size of the emitting source or its ecliptic latitude. Figure 4 shows how these quantities are related for a source of uniform surface brightness. An exhaustive discussion of the spin modulation analysis technique has been given by Fainberg (1976).

TABLE 1. IMP-6 GODDARD RECEIVER FREQUENCIES

CHANNEL	SFR 1	SFR 2	CHANNEL	SFR 1	SFR 2
1	30 kHz	30 kHz	17	600 kHz	600 kHz
2	44	44	18	737	737
3	55	55	19	870	815
4	67	67	20	1030	950
5	83	83	21	1270	1030
6	92	92	22	1450	1100
7	110	110	23	1850	1270
8	130	130	24	2200	1450
9	155	155	25	2600	1630
10	185	185	26	3250	1850
11	210	210	27	3930	2200
12	250	250	28	4900	2600
13	292	292	29	5700	3000
14	375	375	30	6870	3600
15	425	425	31	8300	4200
16	475	475	32	9900	4900

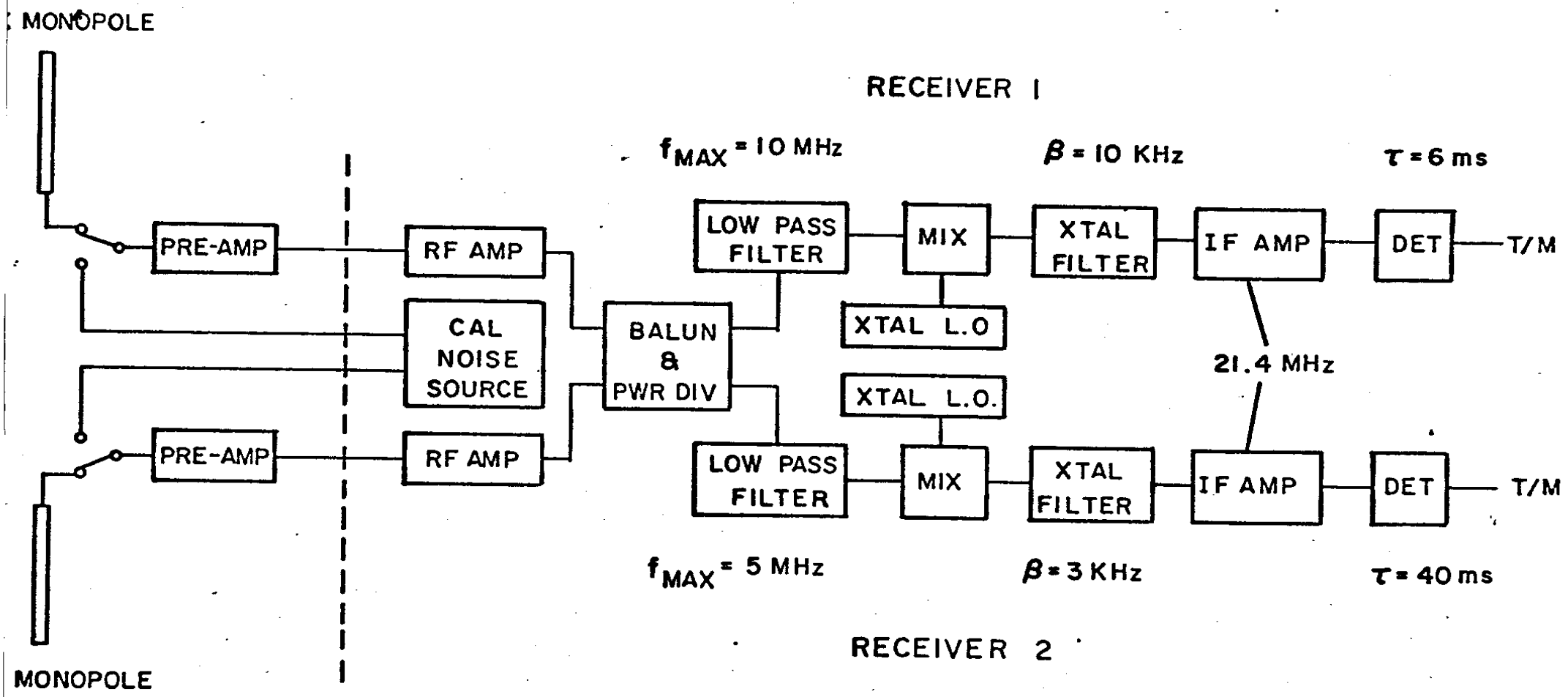

Fig. 1. Block diagram of the IMP-6 receivers

p.6

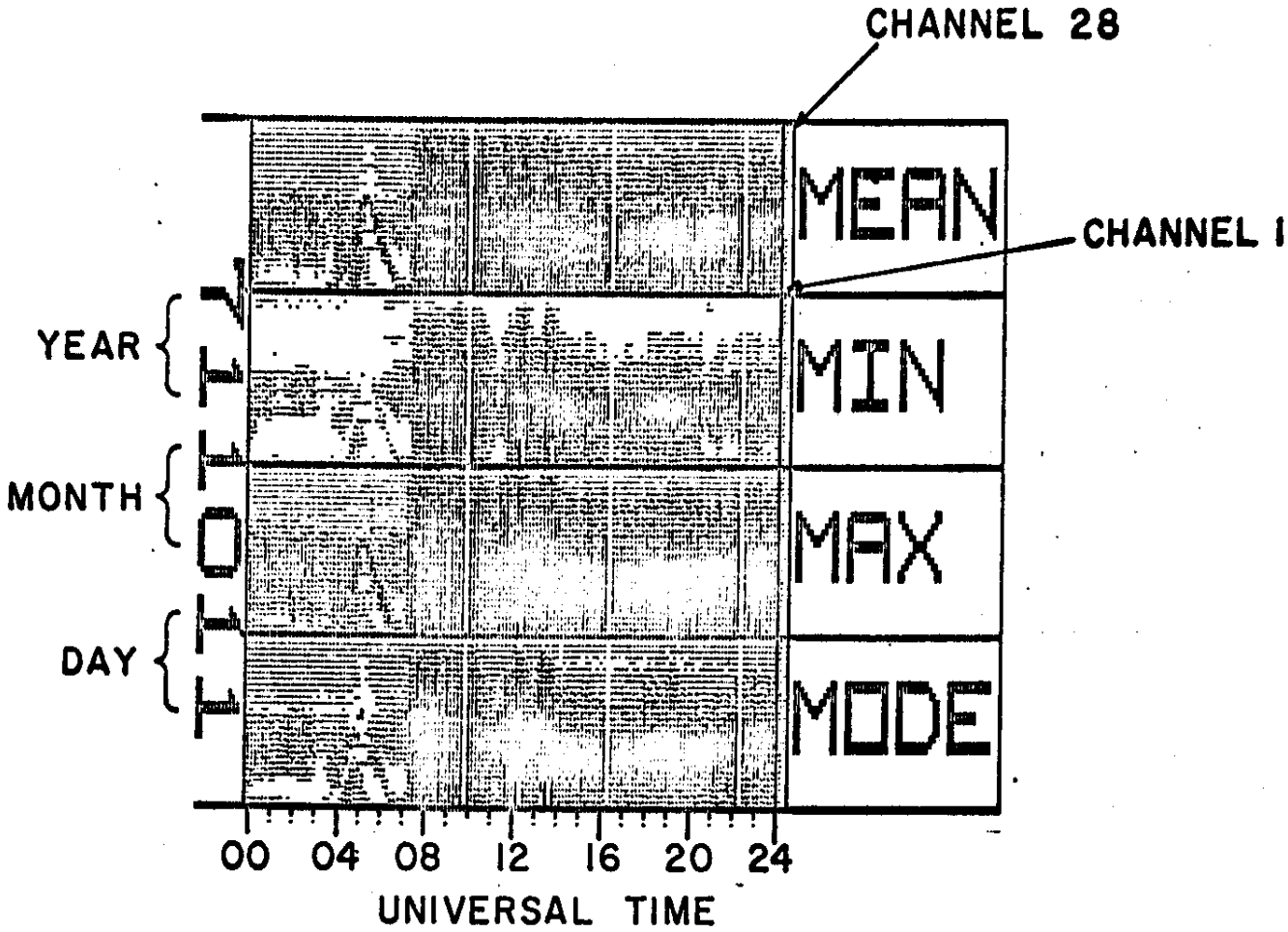

Fig. 2. Twenty-four hour dynamic spectrum in which increasing darkness indicates increasing intensity. The vertical "stripes" which appear after 7 hr are due to intermodulation effects in the pre-amplifier caused by intense terrestrial noise levels at frequencies near 0.3 MHz (frequency channels 7-15). The event between 04 and 07 hr resembling an arrowhead is the upper-hybrid resonance noise near perigee reported by Mosier et al. (1973).

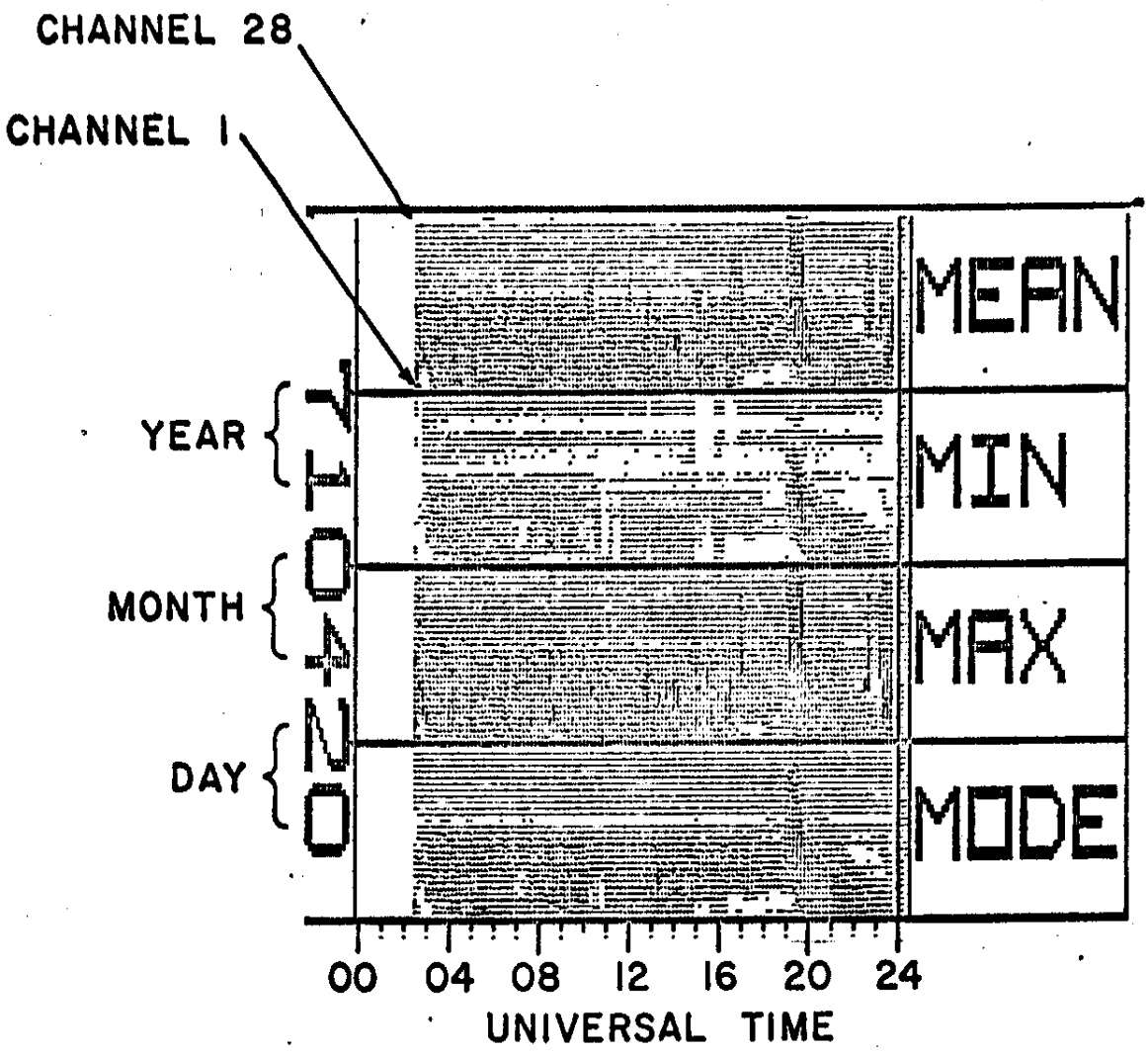

Fig. 3. Both this figure and Fig. 2 are examples of the dynamic spectral displays generated from the IMP-6 Ten Minute Summary Tape. Increasing darkness indicates increasing signal intensity. Note (1) a type III solar radio burst at about 19-20 hr, (2) weak terrestrial kilometer wavelength emission throughout the day, but particularly at 13-17 hr, and (3) interference from the NASA range and range rate tracking system at 23-24 hr. The range and range rate interference was particularly common during the first month of operation and can be easily recognized by its abrupt onset and sharp low-frequency limit of about 150 kHz.

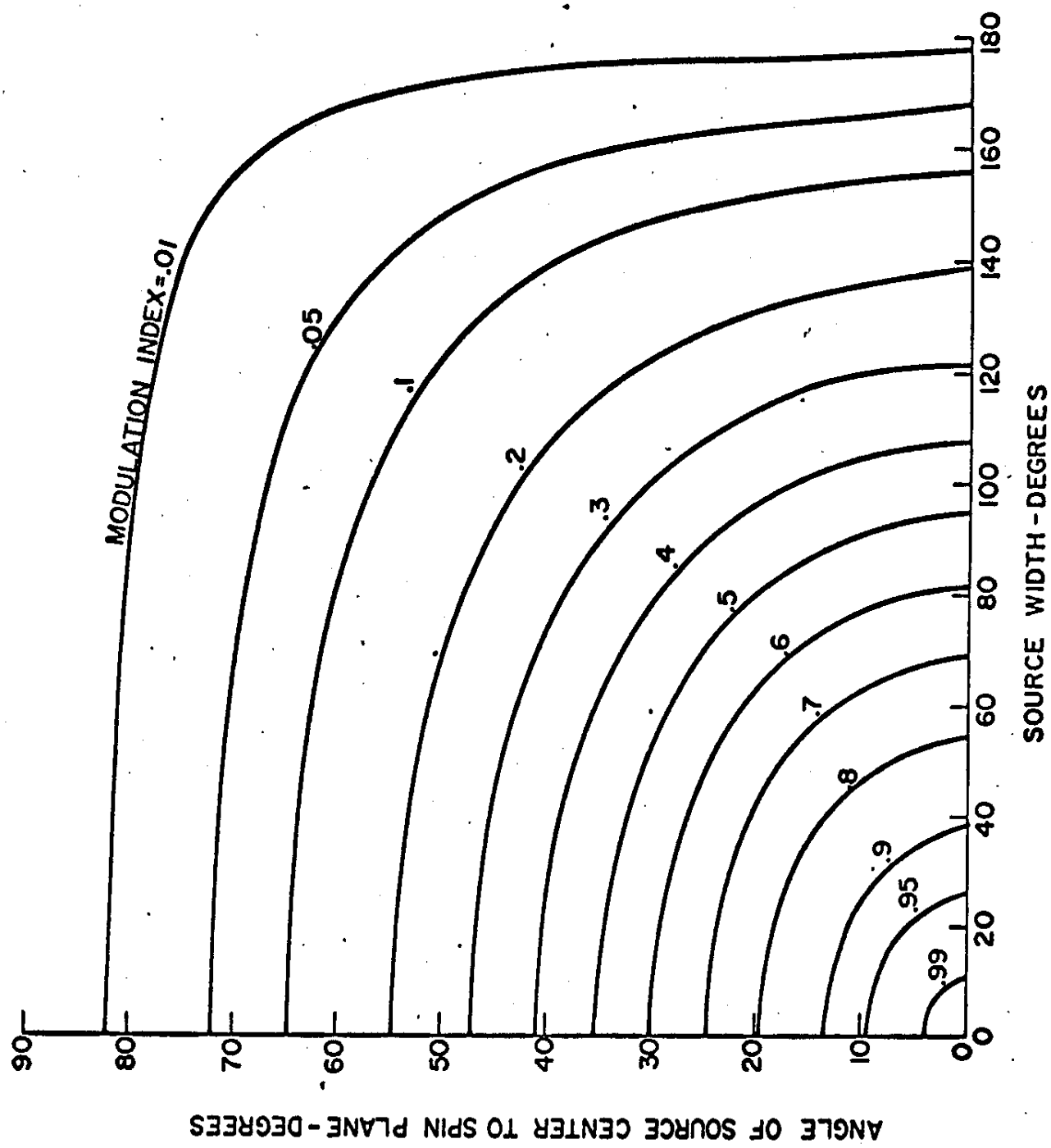

Fig. 4. The relationship between modulation index, source size and angle out of the spin plane (ecliptic plane) for a source of uniform surface brightness.

Appendix

TAPE FORMAT FOR THE IMP-6 TEN MINUTE SUMMARY TAPE

EACH LOGICAL RECORD CONTAINS A SUMMARY OF TEN MINUTES OF DATA FROM THE SFR-2 RECEIVER (FIRST 28 CHANNELS). THE TEN MINUTE INTERVALS ARE DEFINED TO START AT PRECISELY 0 HR ON EACH DAY. THE LOGICAL RECORD LENGTH IS 416 8-BIT BYTES + A 4-BYTE LOGICAL RECORD CONTROL WORD. THE PHYSICAL RECORDS ARE 32344 BYTES (=420*77+4). THE TAPES ARE 9-TRACK 1600 BPI. THE INDIVIDUAL QUANTITIES IN EACH RECORD ARE:

FORTRAN WORD #	TYPE	LENGTH BYTES	DESCRIPTION
1	I	4	DATE IN YYMMDD FORM (E.G. MAY 15,1971=710515)
2	I	4	UT IN ELAPSED SECONDS FROM 0HR AT THE START OF TEN MINUTE INTERVAL
3,4,5	R	4	GEOCENTRIC EQUATORIAL X,Y,Z OF SPACECRAFT (KM)
6	R	4	SPIN PERIOD IN SECONDS
7-20	I	2	THE AVERAGE ANTENNA TEMPERATURE FOR THE FIRST 28 FREQUENCIES OF SFR-2 IN THE ORDER OF TABLE1 THE AVERAGES ARE IN THE FORM 100*ALOG10(TAVE)
21-34	I	2	THE STANDARD DEVIATION OF THE AVERAGE ANTENNA TEMPERATURES ALSO IN THE FORM 100*ALOG10(TSTD)
35-48	I	2	AVERAGE SOURCE DIRECTION FOR EACH FREQUENCY AS DETERMINED FROM SPIN MODULATION. STORED IN THE FORM 100*PHI (IN DEGREES RELATIVE TO SUN WITH - TO EAST AND + TO WEST).
49-62	I	2	STANDARD DEVIATION OF AVERAGE SOURCE DIRECTION ALSO IN THE FORM 100*PHISTD
63-69	I	1	NUMBER OF SAMPLES AT EACH FREQUENCY IN THIS TEN MINUTE INTERVAL
70-76*	I	1	2% MINIMUM ANTENNA TEMPERATURE IN DB ABOVE 1°K
77-83*	I	1	2% MAXIMUM ANTENNA TEMPERATURE IN DB ABOVE 1°K
84-90*	I	1	MODE (MOST COMMONLY OCCURRING) ANTENNA TEMPERATURE IN DB ABOVE 1°K
91-97	I	1	MODULATION INDEX FOR EACH FREQUENCY AS DEDUCED FROM SPIN MODULATION
98-104	I	1	STANDARD DEVIATION OF MODULATION INDEX

* THE 2% VALUES AND THE MODE WERE DETERMINED BY FORMING HISTOGRAMS (FOR EACH FREQUENCY) IN 1 DB INCREMENTS FROM THE INDIVIDUAL SAMPLES TAKEN DURING THE 10 MINUTE INTERVAL. THE HISTOGRAMS WERE THEN SCANNED TO FIND THE LOWEST BIN CONTAINING AT LEAST 2% OF THE TOTAL NUMBER OF SAMPLES, THE HIGHEST BIN CONTAINING 2% OF THE TOTAL, AND THE BIN CONTAINING THE MOST SAMPLES (MODE). IN SOME CASES, NO BIN CONTAINED AT LEAST 2% OF THE VALUES, SO A ZERO WAS WRITTEN ON TAPE.

THIS TAPE CAN BE READ AS FOLLOWS (IN IBM FORTRAN IV)

```
      INTEGER*4 A(104)
      LOGICAL*1 NUM(28),MIN(28),MAX(28),MODE(28),ALPHA(28),ASTD(28)
      INTEGER*2 TAVE(28),TSTD(28),PHI(28),PHISTD(28)
      EQUIVALENCE (A(1),IYMD),(A(2),ISEC),(A(3),X),(A(4),Y),
     1   (A(5),Z),(A(6),SPIN),(A(7),TAVE(1)),(A(21),TSTD(1)),
     2   ((A(35),PHI(1)),(A(49),PHISTD(1)),(A(63),NUM(1)),
     3   (A(70),MIN(1)),(A(77),MAX(1)),(A(84),MODE(1)),
     4   (A(91),ALPHA(1)),(A(98),ASTD(1))

      READ(IUNIT,END=XXXX) A
```

IMP-6 GODDARD RADIO ASTRONOMY EXPERIMENT BIBLIOGRAPHY

1972

Fainberg, J., L.G. Evans, and R.G. Stone, "Radio Tracking of Solar Energetic Particles through Interplanetary Space", Science, 178, 743-745, 1972.

1973

Brown, L.W., "The Galactic Radio Spectrum between 130 and 2600 KHz", The Astrophysical Journal, 180, 359-370, 1973.

Evans, L.G., J. Fainberg, and R.G. Stone, "Characteristics of Type III Exciters Derived from Low Frequency Radio Observations", Solar Physics, 31, 501-511, 1973.

Lin, R.P., L.G. Evans and J. Fainberg, "Simultaneous Observations of Fast Solar Electrons and Type III Radio Burst Emission Near 1 AU", Astrophysical Letters, 14, 191, 1973.

Malitson, H.H., J. Fainberg, and R.G. Stone, "Observations of a Type II Solar Radio Burst to 37 R", Astrophysical Letters, 14, 111-114, 1973.

Malitson, H.H., J. Fainberg and R.G. Stone, "A Density Scale for the Interplanetary Medium from Observations of a Type II Solar Radio Burst out to 1 Astronomical Unit", The Astrophysical Journal, 183, L35-38, 1973.

Mosier, S.R., M.L. Kaiser, and L.W. Brown, "Observations of Noise Bands Associated with the Upper Hybird Resonance by the IMP-6 Radio Astronomy Experiment", Journal of Geophysical Research, 78, 1673-1679, 1973.

Stone, R.G., "Radio Physics of the Outer Solar System", Space Sciences Reviews, 14, 534-551, 1973.

1974

Brown, L.W., "Jupiter Emission Observed near 1 MHz", The Astrophysical Journal, 192, 547-550, 1974.

Brown, L.W., "Spectral Behavior of Jupiter near 1 MHz", Astrophysical Journal (Letters), 194, L159-L162, 1974.

Fainberg, J. and R.G. Stone, "Satellite Observations of Type III Solar Radio Bursts at Low Frequencies", Space Science Reviews, 16, 145-188, 1974.

1975

Brown, L.W., "Saturn Radio Emission near 1 MHz", The Astrophysical Journal, 198, L89-92, 1975.

Kaiser, M.L. and R.G. Stone, "Earth as an Intense Planetary Radio Source: Similarities to Jupiter and Saturn", Science, 189, 285-287, 1975.

Kaiser, M.L., "The Solar Elongation Distribution of Low Frequency Radio Bursts", Solar Physics, 45, 181-187, 1975.

1976

Brown, L.W., "Possible Radio Emission from Uranus at 0.5 MHz", Astrophysical Journal, 207, L209-L212, 1976.

Fainberg, J., "A Precise Method of Determination of Source Direction and Width from Spin-Modulated Spacecraft Measurements", GSFC Rept. X-693-76-91, 1976.

Fitzenreiter, R. J., L. G. Evans, and R.P. Lin, "Quantitative Comparisons of Type III Radio Burst Intensity and Fast Electron Flux at 1 AU", Solar Physics (in press; also GSFC Rept. X-693-75-236), 1976.

Fitzenreiter, R.J., J. Fainberg, and R.B. Bundy, "Directivity of Low Frequency Solar Type III Radio Bursts", Solar Physics (in press; also GSFC Rept. X-693-75-284), 1976.

RECORD 1 OF FILE 2
LENGTH = 32344 BYTES

DATE

IMP. I

April 20, 1971

Sept 26, 1972

D-27597-C-

7E580000	01A40000	000AD714	00002328	C3F78A8F	C42E88E3	43B984D1	41B205AE	04930436	0560054B
03FF038E	039F0383	03520338	032602F0	037F03F7	02F802D2	02F902DE	02DF02DF	02DF02DC	02D702D1
02CA02C4	02B902AF	04BF044A	058B0587	043003A3	03AB03CB	0363035F	034F0306	03B30441	031E02FD
033C02FF	02F802F9	030102FC	030102FB	02F402FE	030202FC	0883116F	0DEE1427	131C139D	0EBE0B64
099A18F2	0AAD1044	1C3E07CA	1A9C148B	14000A78	0A2109D2	09080738	02490338	04B4021A	E6C5F841
120B0EB3	0D220E42	06900540	0D9304E2	0740067C	064D0681	0EBA1198	0A010563	090B02C6	05DF0727
018E0961	02DB0608	0B68063A	0E551014	78785B56	78787878	78787878	78787878	78787878	78787878
78787878	6B656B55	4F4F564C	4C4A4742	42454545	47484848	48474746	46454443	7D719594	72636462
5D585A50	656D544C	4D4A4A48	4B4B4A49	4848464B	6F6A8250	5751594E	4D4C4846	45464747	48494949
49494847	47464544	19438251	423B1033	2E1F402B	394A3A16	3D0F1215	0F170D0D	140D0908	12231D1D
1D1F1110	1C16210E	153D1311	31071414	03130504	11030A0B	01A40000	000AD714	00002580	C35D82C5
C43A26B8	44143A4E	41B22251	04E203E4	03DB03D9	039F03A5	03850389	040103F4	036B0374	03800310
03040320	02F102EA	02EF03AA	02E902E0	02D802F4	02C502BA	02F002A4	051E03CB	03EF0404	03870388
03890393	04480428	038A0388	03A20329	030E035E	02F802F4	02F403F1	02F302F3	02F20317	02EF02EE
031302F0	060F051C	05C1041B	075A063B	076905D8	01100E27	064904D9	05A50565	062E0462	017601EF
047002BA	037F033D	047C02EB	03330586	03BEFF8C	070D06CD	06E107A4	0B790D45	0A500AA5	074B1059
0C6604D0	04EA04B4	034A0428	01EF0235	03D00643	027605A2	026202CE	052704DA	0A3905FD	1C1C1C1B
1C1C181C	1C1C1C1B	181C181C	1C1C1C1C	1A1C181C	1C1C1C1B	5F5C5B4F	5150544E	404F483C	3A3C4747
3448453C	3A3A4342	2E40382D	8A676C6E	66646160	7470615F	6256545D	4F4C4E6C	4E4C4A54	49475446
6C655E58	58575750	52564D3C	47484A49	4A4A4A4A	4A494847	47474544	18261921	302C2D2B	3B2E2F29
29232E21	2A292924	1F232017	120D0B08	0506071A	1C1D2D1B	1D2B2509	0C0E0E10	0D0B140B	0E15120A
0A040604	01A40000	000AD714	000027D8	436057E7	C444FC3C	441D9850	41B22251	03E603D9	03AB03AE
048104B2	040203DA	03ED03C4	033402F3	02EC02F2	03010304	03130308	030302FA	02F502EF	02EA02DA
02D202C8	02BD02B1	038503C4	038103B5	04A504D7	04520423	042B0407	03680304	02FF0305	0309030C
030E0307	03050300	02FF0302	030102FC	02F702FC	030202FB	03D803B1	03EF0335	F9E40290	03EC0523
05E404D5	056604EB	052F035A	030B01DF	02E1023B	05C4042B	055E0805	069F02D2	09AE031E	0C8D0D40
0B810C92	0B74161D	13930BD0	024704E7	02E40157	04320165	00E800E3	017D0189	0173011D	04480410
020F02F4	017404AD	030402D8	0DB70A40	78787878	78787878	78787878	78787878	78787878	78787878
78787878	61585A54	53525551	4E4B4A46	45484849	4A494949	49484847	46464543	66676064	7C81706F
6E6C584F	50505253	5352514F	504F504C	4A484746	63625D57	54545853	51504E4B	47494A4B	4C4B4B4B
4A494948	47474544	22142010	2D2C0F22	291C2A34	443C3635	31231E1B	1717100E	12090905	0804050B
13080307	08060705	06020308	09040608	05040103	05020601	01A40000	000AD714	00002A30	43FCD25E
C44C5CDC	4424B53B	41B22251	040303DE	03D90475	04C903C6	0374035F	03460324	03280311	031F0309
030F0314	030A02F9	02F602EF	02EA02E6	02DE02D6	02CD02C7	02BD02B0	03E103C7	03BC0499	04DB03B3
03320349	03310316	03200315	031802F9	02F70301	02FA02EE	02ED02ED	02EC02F0	02EB02E8	02E802EA
02EF02EA	FECCFCDD	0BB701D4	02AA0718	056D05D0	052304FD	04BC045A	0487031C	03E4036C	04AF0697
07F4068F	0740074A	0659059A	08490934	099A0697	0FB51147	0DDA0A69	045501CE	01C70208	019000C6
00ED00CD	01800184	01C201D8	020D020C	037F0416	02990445	02160270	078003E1	0D1C0C51	3C3C3C3C
3C3C3C3C	3C3C3C3C	3C3C3C3C	3C3C3C3C	3C3C3C3C	3C3C3C3C	635E5E62	60585651	4F4C4A48	4849494A
4A494949	49484847	46454543	6A676678	81655A5A	57545554	55505052	524E4E4D	4C4C4A49	49484745
65616362	61605855	524E5049	4D4B504D	4B4A4A4A	49494948	47474544	182C191C	0B121E36	3738383C
33272420	1D1A1817	14130F10	100B0804	10261219	0304040E	06040505	09060605	04040B0C	03070404
0F030402	01A40000	000AD714	00002C88	441C2FDF	C45461F2	442D3286	41B22251	047F04AA	04710435
03D503E9	03A503DE	03C60375	035F0347	032B02FC	02FB02FB	02F502F2	02F202EB	02E702E4	02DC02D4
02CF02C5	02BC02B0	04B004DB	048A044A	038B03D3	038A03D8	03CE035B	033C0329	03120301	02FD02FC
03010300	030102FE	02FE02F1	02FE02FF	02FE02FB	030102FC	DEE505DD	04CD01DC	07E50855	05410451
052B04D7	05A405B4	06EC0612	03A504FF	0650066C	062E063D	06B505DA	07330887	08350ADD	0B6702B7
0C30107E	0A250D30	07880724	06C00694	06EB0686	06A706B1	075107F8	06D40720	06B906D4	06D90746
06B606E8	06B80B0F	08BC0877	0AD50F7F	78787878	78787878	78787878	78787878	78787878	78787878
78787878	6261615C	605F5959	5552514E	4C494949	49494949	48484747	46454443	7E827A74	636860B8
67585856	544F4F4E	4D4D4E4E	4B4C4A49	4B4B4745	63636250	61613864	5A585755	51484A4D	4A4A4B4A
4A494948	47464544	3D100E05	1119222F	35303130	232B2822	1D1C1C18	1519120B	0A090A04	1C140903
03050309	0606060E07	080A080D	080C0A08	04070504	04040502	01A40000	000AD714	00002EE0	44256D26
C459A5EE	44334037	41B22251	04D8042B	03D003B1	03F0042F	03EA042E	03DF0378	03600349	032D030E
02FF02FD	02F402F4	02F202EB	02E702E5	02DF02D3	02CC02C5	02BB02AF	050703EA	03A0036A	03B90409
03BF0409	03C90353	03A20324	03070306	02EE0302	03010302	02FC02FD	030002E6	02FE02FA	02F902FF

079103AE	029F0262	063C0334	0EC80C44	78787878	78787878	78787878	78787878	78787878	78787878
78787878	6B6B625F	656B6468	5B565351	4D4A4949	49494949	48484746	46454443	6F756A63	686D6A6C
615D5A58	55565453	4E4F4E4D	4C4C4B4A	48474645	6C706661	666C666B	605A5757	514F4B48	4C4A4B4A
4A494848	47464544	1F2F3020	0E0F1C28	29212822	24343327	251F231A	1615110F	0C0B0B06	28192233
04050810	070A0F0F	101F2010	08080F07	05080505	05030502	01A40000	000AD714	00003390	4437289A
C4627742	443E5CF8	41B22251	04600464	041503F4	0413043A	0409040E	03A0036C	03580359	03520363
03420316	02F902F5	02F502EB	02E702E3	02D802D3	02CA02C4	02BA02B0	0499045B	043C0428	03F903F3
03D703F1	037D034A	03540362	03580392	036A0314	02FE0300	02FF02FD	030002FC	02FF02FD	02FE02FE
02FE02F8	0E5305FE	05920F72	15021518	06EE0849	117E17C2	1467170 1	16FA139C	162D11F9	063B0519
05CB075E	06920806	06F806CE	0AC10786	05F9109B	03AD0488	02820E70	0D050EAD	1057045F	0500093B
0894093B	0C340596	0D871128	02BC013B	04010378	01CA039C	026D021B	06980470	07A50B62	78787878
78787878	78787878	78787878	78787878	78787878	78787878	686C6162	66696463	5954504E	4E4F4A4A
49494948	48484747	46454443	70746C64	696D696A	605A5B5C	5B5F5D54	4F4F4F4C	4C4C4A49	48474645
6E706663	686C6665	5B565451	50514C4E	4C4A4A4A	4A494848	47464545	12282609	12111B17	21222F2B
412B442D	2628231B	1B171110	0D0B0B05	07090605	0D071306	0A090E12	2214231D	0D0A0B09	07070304
05030403	01A40000	000AD714	000035E8	443FAC4E	C46636BC	4443823A	41B22251	0450046F	040903EC
04250434	040303E1	039A0393	039C039F	0397035C	035E035A	02FF02FD	02F602EC	02EA02E3	02DB02D3
02CB02C4	02BA02B1	04210453	03F803AF	0440042A	03FC03BC	03780393	03900388	039D035F	039403AB
03040301	030102F9	02FE02FF	02FC02FB	02FB02FE	02FE02F8	0FFB0483	0C0009EB	0E290DE0	0D2B1096
13C510F1	130614D0	18BC1082	0D430F5E	05AD0724	06F507A2	073305F9	077D0664	072B083F	084C088E
08FB071C	0A7A0F6E	08480888	0A7709D5	0577075F	07F20803	0887112B	0CF10C91	090D04E0	076B05A5
04C60610	0238035C	05D00302	05540BF3	78787878	78787878	78787878	78787878	78787878	78787878
78787878	6C6D6162	6668615F	58565555	544B4A49	49494948	48474747	46454443	71746B66	6E706C66
60606061	615B5E59	4F4F4F4C	4C4B4B49	48474646	6D706664	67696363	5B5A5A5D	5B564D4D	4C4C4B4A
49494848	47464545	0E2E2311	0D132126	2F2D333C	353D3F3A	2428291D	1D1A1411	0E0C0E07	06080D0F
090D100E	0F0D0F17	171B1A18	0C182508	08080404	07040504	01A40000	000AD714	00003840	4447F89F
C4699D04	44486CA4	41B22668	044D0488	042F0456	044C0448	04140 3E3	03AE03A8	03A903A7	039E0375
03500325	030102F9	02FA02ED	02E802E4	02DC02D3	02CC02C5	02BA02B1	041C046C	045604A4	047F047B
043903F6	03CF03C3	03A303A8	03AA039C	037D0349	03290323	03310323	03240323	03230323	03240323
03230323	08F102EB	0DB6DDB9	0F051F96	DEEC2199	189D1770	193D1F2A	18DC18D1	13C60B91	08560956
08BA06CE	07B70AB8	09E80902	06D30746	FAA006F1	09A7092C	06CC0E74	0A0C0AC7	0AE30BD3	048F0396
02D308F0	03E40907	074E0710	038F0261	0417032D	01BE04C9	027402C1	08150 4BD	11B2098E	E7E7E7E7
E7E7E7E7	E8E8E8E8	E8E8E8E8	E8E8E8E8	E8E8E8E8	E8E8E8E8	6B6E6363	66676D5D	57575754	50484949
49494948	48484746	46454443	71777479	7877736A	64626464	64605D58	524F4E4E	4D4C4A49	49484646
6D746764	676B6260	5B5B5B58	5D4E4B4C	4C4C4B4A	4949 4848	47464545	0E2E2622	1D302521	2B4C484E
4741342B	20191415	1110100C	0B0B0B06	080C0C1A	11190F11	0A230C1F	0B111D1A	09070606	03050403
05030703	01A40000	000AD714	00003A98	4451218F	C46D1B79	444D8FD5	41B22251	045F0492	044F047C
048C0498	045E0409	03CD03D1	03BE03BF	0396033F	032B02FD	02F902EF	02EF02EA	02E502E1	02D902D1
02CB02C3	02B902AF	043C046F	044C048E	04A704BA	046A040E	03BE040D	03BF03F3	03A60349	03590310
030102FD	030002FD	02FE02FE	02FE02FF	02FB02FA	02F802FD	160701CC	0E070317	12081332	15BF16CA
1BB819AF	192C1999	15D2113B	0C03048C	06C40725	0842062E	07C307BE	05920797	0BB20A18	08370654
104B07E9	075B0F36	08C10AFC	092B0639	03640250	04A30210	05150987	092402EB	028503F5	046F04F6
022F057C	035D0263	06270551	08510A99	78787878	78787878	78787878	78787878	78787878	78787878
78787878	6D706862	64645F5D	5A595753	4F4A4949	49484948	48484746	46454443	73787578	7D7E766D
67676667	635A5751	504E4E4E	4B4B4A49	48474645	6E736E6E	676D6F64	615F5C5C	5D4C4B4B	4A494B4A
4A494848	47464544	06193309	0B0C181D	2F393739	31402724	201D1F1B	14160D0E	0C080C04	030A0706
07071009	0B150B07	0E261A0C	0F0C110F	040B0403	04030502	01A40000	000AD714	00003CF0	445902CB
C46FEAA6	44524 0D7	41B22251	04570492	045F03DC	03E303DE	03AC03B2	03B003A6	037C0360	034A0334
030F02F7	02F202EE	02EF02E7	02E402E3	02D902D1	02CA02C3	02B902B0	041A046D	0440038B	039F03A4
0378039E	039F03C1	038A034D	0349035A	03340300	02FD02FE	02FD02FC	030002FC	02FD02FF	02FE02FB
02F902F9	1122F998	0D680890	0CE40A29	12971369	196C1781	181015BA	14580D52	072406A8	053D0687
05E60887	058C0666	062F0714	06F20631	04370 3D0	0E180750	074606C3	03A30326	067806E5	03B50234
01FA0242	02750605	033C030C	0118013F	030D0387	017E047E	02B602E7	065503C7	08A805DA	78787878
78787878	78787878	78787878	78787878	78787878	78787878	6D706B61	61615B5B	58575351	4D494849
49494848	48484746	46454443	71787363	65656064	63605C5A	5A59534F	504D4F4C	4B4C4A49	48474645
6E757062	63635D5D	5E5B5655	524E4A4B	4B4A4A4A	49494848	47464544	0A191B07	0A0C131C	2A27332F
2B1C2722	261F1E19	19151211	0F0E0F08	07080E03	02040509	08060507	06090F0E	0A070809	08080406
07070805	01A40000	000AD714	00003F48	4460B6A1	C47280A8	445697DA	41B22251	04790486	043703D1
03D303CC	03A103A9	03A20384	03660350	032902F6	02FC02F5	02F802F3	02F002ED	02E702E6	02DB02D3
02CC02C5	02BC02B0	047C046B	041D0386	037E037B	036C038A	0394036 1	03470332	030C02FD	03040302
02FE02FF	030102FF	02FE02FD	02FD02FD	02FB02FB	02F702F8	E628F7EE	08220AC1	094908C1	0C05088A
0EA60E1B	1498164A	14D5059D	04FD048E	056605E0	068705BA	06A3066B	07170463	071E068C	033E016C
12120195	037707DB	04850349	030B023B	0C46031C	01E70169	01FD0197	0198020F	017A0167	0490034F
0222039A	029502CF	04060450	06800924	78787878	78787878	78787878	78787878	78787878	78787878
78787878	6F6D6660	605F5A59	5555524F	4D484848	48494948	48474746	46454443	74776F63	63625F61
615D5A58	534E5050	4F4D4D4E	4C4D4A4A	49484746	72746C61	61615B5C	5D595654	524C4A49	4C4B4B4A
4A494848	47464544	111F1C0A	0E0C0F1A	2D142D31	2A2F2D24	27252121	1517110F	0F0B0E07	14080905
03030207	15060605	060A0E08	0908140E	060A0205	06030703	01A40000	000AD71A	00004 1A0	A4683EC5

```
77777777  77777777  77777777  77777777  77777777  77777777  77777777  77777777  77777777  77777777
77777777  77777777  77777777  77777777  77777777  77777777  77777777  77777777  77777777  77777777
77777777  77777777  77777777  77777777  77777777  77777777  77777777  77777777  77777777  77777777
77777777  77777777  77777777  77777777  77777777  77777777  77777777  77777777  77777777  77777777
77777777  77777777  77777777  77777777  77777777  77777777  77777777  77777777  77777777  77777777
77777777  77777777  77777777  77777777  77777777  77777777  77777777  77777777  77777777  77777777
77777777  77777777  77777777  77777777  77777777  77777777  77777777  77777777  77777777  77777777
77777777  77777777  77777777  77777777  77777777  77777777  77777777  77777777  77777777  77777777
77777777  77777777  77777777  77777777  77777777  77777777  77777777  77777777  77777777  77777777
77777777  77777777  77777777  77777777  77777777  77777777  77777777  77777777  77777777  77777777
77777777  77777777  77777777  77777777  77777777  77777777  77777777  77777777  77777777  77777777
77777777  77777777  77777777  77777777  77777777  77777777  77777777  77777777  77777777  77777777
77777777  77777777  77777777  77777777  77777777  77777777  77777777  77777777  77777777  77777777
77777777  77777777  77777777  77777777  77777777  77777777  77777777  77777777  77777777  77777777
77777777  77777777  77777777  77777777  77777777  77777777  77777777  77777777  77777777  77777777
77777777  77777777  77777777  77777777  77777777  77777777  77777777  77777777  77777777  77777777
77777777  77777777  77777777  77777777  77777777  77777777  77777777  77777777  77777777  77777777
77777777  77777777  77777777  77777777  77777777  77777777  77777777  77777777  77777777  77777777
77777777  77777777  77777777  77777777  77777777  77777777  77777777  77777777  77777777  77777777
77777777  77777777  77777777  77777777  77777777  77777777  77777777  77777777  77777777  77777777
77777777  77777777  77777777  77777777  77777777  77777777  77777777  77777777  77777777  77777777
77777777  77777777  77777777  77777777  77777777  77777777  77777777  77777777  77777777  77777777
77777777  77777777  77777777  77777777  77777777  77777777  77777777  77777777  77777777  77777777
77777777  77777777  77777777  77777777  77777777  77777777  77777777  77777777  77777777  77777777
77777777  77777777  77777777  77777777  77777777  77777777  77777777  77777777  77777777  77777777
77777777  77777777  77777777  77777777  77777777  77777777  77777777  77777777  77777777  77777777
77777777  77777777  77777777  77777777  77777777  77777777  77777777  77777777  77777777  77777777
77777777  77777777  77777777  77777777  77777777  77777777  77777777  77777777  77777777  77777777
77777777  77777777  77777777  77777777  77777777  77777777  77777777  77777777  77777777  77777777
77777777  77777777  77777777  77777777  77777777  77777777  77777777  77777777  77777777  77777777
77777777  77777777  77777777  77777777  77777777  77777777  77777777  77777777  77777777  77777777
77777777  77777777  77777777  77777777  77777777  77777777  77777777  77777777  77777777  77777777
77777777  77777777  77777777  77777777  77777777  77777777  77777777  77777777  77777777  77777777
77777777  77777777  77777777  77777777  77777777  77777777  77777777  77777777  77777777  77777777
77777777  77777777  77777777  77777777  77777777  77777777  77777777  77777777  77777777  77777777
77777777  77777777  77777777  77777777  77777777  77777777
```

RECORD 932 OF FILE 2
LENGTH = 32344 BYTES

```
7E580000  01A40000  0008001D  0000FD20  452EE5C2  4474D394  449F7928  41C8E35F  03FD03E1  03A00362
033A032C  034102F4  03000345  034F02F1  032F0329  03240326  02DC02D5  02D502D2  02D302CC  02D902C1
02B902B2  02A802A3  03DD03A3  037D0328  03080302  031A0300  02FF0323  03590306  03780334  0326033E
02FE02FB  02F50301  02FD02F9  02FE02FB  02FC02F9  030402FF  FF8BF6D1  FEB3FF74  FE9CFD68  0051FE8B
FD880043  00A0FCDB  FC51FB08  FB13FA55  FF130090  0184017C  00DC00A4  0267016B  FE5D0177  002DF935
02A40429  02820542  055F0680  03A501EF  021D0233  02590261  050F02FF  03A50537  03280280  08C20A3D
02FC0A2F  054F0402  0EC504AC  0A1B0DB8  78787878  78787878  78787878  78787878  78787878  78787878
78787878  62615953  4F4F4F43  494F453D  3F46474B  46464646  47464745  44434341  6A656058  5453554F
4F575B51  59585C57  4C4A4A49  49484A47  46464544  64635C56  5250534A  4D53544B  464D4D4C  48484848
48474846  45454443  18152115  16172343  3B34625F  564A4F3B  1D181716  10160A0B  12090707  06040908
08090809  07080E0A  180E1217  0E050A0A  03090402  07030304  01A40000  0008001D  0000FF78  452EE967
4475F3FF  449E9A3A  41C8E776  03F903DC  0393035E  03380327  034002FC  03020331  02F102DB  037D033A
032D0321  02D902D5  02D602D2  02D302CC  02D902C1  02E902B4  02AB02A2  03C203AD  035C032D  030D02FF
03160304  03060308  03050302  038D0346  0338032A  02FF02FB  03000304  02F902F8  030002F9  02FB02FC
02FB02FF  01BBF05F  FC31FC83  FE34FEFA  FEA0FDFB  FD3FFFC3  FF82FCED  F9C8FAF0  FB37FC35  003400FB
00A4021B  01870080  00C40249  05440002  0054FA50  07110339  02D8047D  04E0052A  03360221  02120987
02480320  07620344  02AE0581  036B0316  08520A62  03C2081A  04E3035D  0E3F04FE  09530CC9  78787878
78787878  78787878  78787878  78787878  78787878  78787878  635F5851  4F4D4F43  454F403D  4145484A
46464646  47464745  44444340  67655058  54525550  50535150  64595857  4B494A49  49484A47  46464544
66625C56  5250534A  4D524941  464D4A4B  49484848  48474846  45454443  181C191C  17192254  3C125A58
55535330  18171915  0E140A0B  120A0606  06060506  0808070C  0D080A0E  17121015  09050A09  03090403
08030303  01A40000  0008001D  000101D0  452EECD1  4477130C  449D8A88  41C86079  0A0703D8  039C035F
```