[redacted]

#620

VOYAGER 1 TITAN RADIO OCCULATION DATA
VOYAGER 1 SATURN RADIO OCCULATION DATA
VOYAGER 1 SATURN RADIO OCCULATION DATA

77-084A-02E
77-084A-02D
77-076A-02C

VOYAGER 2 RADIO OCCULATION, URANUS ENCTR
77-076A-02F

VOYAGER 1 & 2

RADIO OCCULTATION DATA

77-084A-02D

77-084A-02E

77-076A-02C

These data sets have been restored. There was originally one 9-track, 1600 BPI tape written in ASCII. There is one restored tape. The DR tape is a 3480 cartridge and the DS tape is 9-track, 6250 BPI. The original tape was created on a PRIME computer and the restored tape was created on an IBM 9021 computer. The DR and DS numbers along with the corresponding D number are as follows:

DR#	DS#	D#	FILES	TIME SPAN
DR005436	DS005436	D059510	1 - 25	11/12/80 - 11/12/80

REQ. AGENT	RAND #	ACQ. AGENT
DAD	V0222	WSC

VOYAGER 1 TITAN RADIO OCCULATION DATA
VOYAGER 1 SATURN RADIO OCCULATION DATA
VOYAGER 2 SATURN RADIO OCCULATION DATA

77-084A-02E
77-084A-02D
77-076A-02C

THIS DATA SET CONSISTS OF 1 TAPE. THE ORIGINAL WAS MADE ON A PRIME COMPUTER IN ITS VERSION OF ASCII. TO CHANGE IT TO STANDARD ASCII, A PROGRAM CALLED CVPRINT WAS WRITTEN AT THE DATA CENTER AND RUN ON THE TAPE. THIS TAPE CONTAINS 25 FILES, 1600 BPI, 9-TRACK, AND IS WRITTEN IN ASCII, ON AN PRIME COMPUTER. THE D AND C NUMBERS FOLLOW ALONG WITH THE TIME SPAN.

D#	C#	TIME SPAN
D-59510	C-23591	
VOYAGER 1 TITAN RADIO OCCULATION DATA		11/12/80
VOYAGER 1 SATURN RADIO OCCULATION DATA		11/13/80
VOYAGER 2 SATURN RADIO OCCULATION DATA		08/26/81

January 17, 1983

To whom it may concern

From: Don Sweetnam, JPL

Subject: Voyager Titan-Saturn Radio Occultation Data Files
for NSSDC

Data files from the Voyager 1 Titan and Voyager 1,2 Saturn Radio Occultation experiments are described. The enclosed tape contains data files as follows:

1	Titan entry frequency and amplitude
2	Same
3	Titan entry trajectory
4	Same
5	Titan exit frequency and amplitude
6	Same
7	Titan exit trajectory
8	Same
9	V1 Saturn entry frequency and amplitude
10	Same
11	V1 Saturn entry trajectory
12	Same
13	V1 Saturn exit frequency and amplitude
14	Same
15	V1 Saturn exit trajectory
16	Same
17	V2 Saturn entry frequecy and amplitude
18	Same
19	V2 Saturn entry trajectory
20	Same
21	V2 Saturn exit frequency and amplitude
22	Same
23	V2 Saturn exit trajectory
24	Same
25	Documentation

Each data file is written in ASCII with logical records of 80 characters and a blocking factor of 90. The tape is 9 track 1600 BPI.

This is a description of the Frequency and Amplitude data files.

Header records:

NPTS	SCID	0	ENEX
I10	I10	I10	I10
XTR	RCVR	MODE	BAND
I10	I10	I10	I10

```
      0          0
      D26.18     D26.18

      0          0
      D26.18     D26.18

      NPTS       The number of data records in the file.
      SCID       The spacecraft identification number.
      ENEX       Entry=1, Exit=2
      XTR        Transmitting station number
      RCVR       Receiving station number
      MODE       Communications mode 1 way 2 way or 3 way
      BAND       Frequency bands on this file, 1=S, 2=X, 3=both

Data records:

      YEAR       DOY        TSPM       SRF        0
      I3         I4         F12.4      D26.18     D26.18

      SPWR       XPWR       XRF        0
      F9.3       F10.3      D26.18     D26.18

      YEAR       Last two digits of year
      DOY        Day of year, 1-365
      TSPM       Seconds past midnight
      SRF        S-band received RF frequency, Hz
      SPWR       S-band received power, db
      XPWR       X-band received power, db
      XRF        X-band received RF frequency, Hz

This is a description of the trajectory files.

Header records:

      NPTS       SCID       0          ENEX       TRAJID
      I10        I10        I10        I10        A32

      NPTS       The number of data records in the file.
      SCID       The spacecraft identification number.
      ENEX       Entry=1 , Exit=2
      TRAJID     32 character file identification.

      XTR        RCVR       C          ETMUTC     AOWLT
      I4         I4         D22.14     D22.14     D22.14

      XTR        Transmitting station number
      RCVR       Receiving station number
      C          Speed of light, Km/s
      ETMUTC     Difference between Ephemeris time and Universal time, sec
      AOWLT      Approximate one way light time, seconds

                 0          0          0
      8X         D22.14     D22.14     D22.14

Data Records:
```

	ETS50	
3X	F16.4	
ETS50	Spacecraft event Ephemeris time, seconds past 1950	
RSCX	RSCY	RSCZ
D23.14	D23.14	D23.14
VSCX	VSCY	VSCZ
D23.14	D23.14	D23.14
REX	REY	REZ
D23.14	D23.14	D23.14
VEX	VEY	VEZ
D23.14	D23.14	D23.14
RSUNX	RSUNY	RSUNZ
D23.14	D23.14	D23.14
VSUNX	VSUNY	VSUNZ
D23.14	D23.14	D23.14
RSC	Occulting Body to spacecraft distance, Km	
VSC	Occulting Body to spacecraft velocity, Km/s	
RE	Occulting Body to Earth distance, Km	
VE	Occulting Body to Earth velocity, Km/s	
RSUN	Occulting Body to Sun distance, Km	
VSUN	Occulting Body to Sun velocity, Km/s	

```
$ASG IN TU1
$NOP
$NOP
$NOP ************ OCUT-2 ****************
$EXE TPLIST RS

INPUT PARAMETERS ARE:  AS SR=1=1 1

 TAPE NO.   1              FILE NO.   1
 RECORD   1                LENGTH    7200
      0858       0031        0000       0001 07/15/82 14:24 OCEP       OL  C                0000       006
3       0001       0003                                                  0.0000000000000000000D+00  0.00000000
00000000000D+00                                                0.0000000000000000000D+00  0.0000000000000000000D+00
                                  80  317  25200.5221  0.22950231903617858 8D+10  0.0000000000000000000D+00
       -7.9300   -8.7735  0.84150850313024291 8D+10  0.0000000000000000000D+00          80  317  25201.
5461  0.22950231898086852 9D+10  0.0000000000000000000D+00          -8.1200   -8.8291  0.84150850293
4063719D+10  0.0000000000000000000D+00          80  317  25202.5701  0.22950231893000793 4D+10  0.0000
000000000000D+00          -8.0600   -8.7329  0.84150850274145507 7D+10  0.0000000000000000000D+00
         80  317  25203.5941  0.22950231887478942 8D+10  0.0000000000000000000D+00          -8.0000
 -8.7459  0.84150850284072260 4D+10  0.0000000000000000000D+00          80  317  25204.6181  0.2295023
1881998901 3D+10  0.0000000000000000000D+00          -8.1900   -8.6741  0.84150850234351196 1D+10  0.
0000000000000000000D+00          80  317  25205.6421  0.22950231876446838 3D+10  0.0000000000000000000D
+00          -7.9700   -8.7940  0.84150850213989868 0D+10  0.0000000000000000000D+00          80  317
  25206.6661  0.22950231871228942 8D+10  0.0000000000000000000D+00          -8.1400   -8.6496  0.841
5085019423950 8D+10  0.0000000000000000000D+00          80  317  25207.6901  0.22950231866086730 9D+10
  0.0000000000000000000D+00          -8.1900   -8.6373  0.84150850175294189 2D+10  0.0000000000000000
000D+00          80  317  25208.7141  0.22950231860702819 7D+10  0.0000000000000000000D+00          -
8.0700   -8.7522  0.84150850155919799 5D+10  0.0000000000000000000D+00          80  317  25209.7381  0
.22950231855192871 0D+10  0.0000000000000000000D+00          -8.2200   -8.7322  0.84150850136293334 8
D+10  0.0000000000000000000D+00          80  317  25210.7621  0.22950231850198974 5D+10  0.0000000000
0000000D+00          -8.1400   -8.8746  0.84150850116845703 0D+10  0.0000000000000000000D+00
  80  317  25211.7861  0.22950231844690856 8D+10  0.0000000000000000000D+00          -8.1300   -8.827
6  0.84150850096918945 2D+10  0.0000000000000000000D+00          80  317  25212.8101  0.22950231839480
8959D+10  0.0000000000000000000D+00          -8.2700   -8.8144  0.84150850077794189 3D+10  0.0000000
000000000D+00          80  317  25213.8341  0.22950231834147949 1D+10  0.0000000000000000000D+00
         -8.0700   -8.6966  0.84150850058850097 5D+10  0.0000000000000000000D+00          80  317  25214
.8581  0.22950231828824768 0D+10  0.0000000000000000000D+00          -8.0600   -8.7640  0.8415085003
9321899 2D+10  0.0000000000000000000D+00          80  317  25215.8821  0.22950231823431701 6D+10  0.000
0000000000000D+00          -8.2000   -8.8697  0.84150850019182739 1D+10  0.0000000000000000000D+00
          80  317  25216.9061  0.22950231818515930 1D+10  0.0000000000000000000D+00          -8.0300
  -8.7701  0.84150850000141357 1D+10  0.0000000000000000000D+00          80  317  25217.9301  0.229502
3181336578360 D+10  0.0000000000000000000D+00          -8.1300   -8.8431  0.84150849982255248 8D+10  0
.0000000000000000000D+00          80  317  25218.9541  0.22950231807846984 8D+10  0.0000000000000000000
D+00          -8.1600   -8.8228  0.84150849952256469 6D+10  0.0000000000000000000D+00          80  31
7  25219.9781  0.22950231802562866 1D+10  0.0000000000000000000D+00          -7.9500   -8.8426  0.84
1508499428562244 D+10  0.0000000000000000000D+00          80  317  25221.0021  0.22950231797505798 3D+1
0  0.0000000000000000000D+00          -8.1800   -8.8322  0.84150849924231567 2D+10  0.0000000000000000
0000D+00          80  317  25222.0261  0.22950231792620849 5D+10  0.0000000000000000000D+00
-8.3400   -8.9171  0.84150849905908202 9D+10  0.0000000000000000000D+00          80  317  25223.0501
0.22950231787222900 3D+10  0.0000000000000000000D+00          -8.3000   -8.9728  0.8415084988640014 6
3D+10  0.0000000000000000000D+00          80  317  25224.0741  0.22950231782279568 2D+10  0.0000000000
000000000D+00          -8.3400   -8.9818  0.84150849868289794 7D+10  0.0000000000000000000D+00
  80  317  25225.0981  0.22950231776876831 0D+10  0.0000000000000000000D+00          -8.1800   -8.96
68  0.84150849848560790 3D+10  0.0000000000000000000D+00          80  317  25226.1221  0.2295023177717
7766 0D+10  0.0000000000000000000D+00          -8.2800   -9.2128  0.84150849829604492 0D+10  0.000000
0000000000D+00          80  317  25227.1461  0.22950231766626892 0D+10  0.0000000000000000000D+00
         -8.1200   -9.1378  0.84150849811226806 4D+10  0.0000000000000000000D+00          80  317  2522
8.1701  0.22950231761533813 40+10  0.0000000000000000000D+00          -8.3500   -9.1333  0.841508497
9240356430+10  0.0000000000000000000D+00          80  317  25229.1941  0.22950231756758727 9D+10  0.00
0000000000000000D+00          -8.1900   -9.0729  0.84150849774320068 2D+10  0.0000000000000000000D+0
0          80  317  25230.2181  0.22950231751754760 7D+10  0.0000000000000000000D+00          -8.1000
   -9.1156  0.84150849735924682 4D+10  0.0000000000000000000D+00          80  317  25231.2421  0.22950
2317464987182D+10  0.0000000000000000000D+00          -8.1100   -8.9870  0.84150849737095947 1D+10
```

Titan
November 12, 1980.

```
0.000000000000000000D+00          80  317  25232.2661  0.22950231741421813 9D+10  0.0000000000000000
0D+00          -8.2100   -9.0704  0.84150849718482055 4D+10  0.0000000000000000000D+00          80  3
17  25233.2901  0.22950231736466979 90+10  0.0000000000000000000D+00          -8.2000   -9.2410  0.8
41508497004766844D+10  0.000000000000000000D+00          80  317  25234.3141  0.22950231731250915 4D+
10  0.000000000000000000D+00          -8.1600   -9.2426  0.84150849681242065 3D+10  0.0000000000000
000000D+00          80  317  25235.3381  0.22950231726561889 5D+10  0.0000000000000000000D+00
 -8.2900   -9.2087  0.84150849664183959 8D+10  0.0000000000000000000D+00          80  317  25236.3621
 0.22950231721295776 30+10  0.000000000000000000D+00          -8.4100   -9.1233  0.84150849644589 84
36D+10  0.000000000000000000D+00          80  317  25237.3861  0.22950231716117858 8D+10  0.000000000
0000000000D+00          -8.1200   -9.3640  0.84150849626196288 9D+10  0.0000000000000000000D+00
    80  317  25238.4101  0.22950231711461791 9D+10  0.0000000000000000000D+00          -8.1100   -9.2
961  0.84150849608742065 20+10  0.000000000000000000D+00          80  317  25239.4341  0.22950231706 5
0176990+10  0.000000000000000000D+00          -7.9300   -9.3210  0.84150849590426635 6D+10  0.00000
0000000000D+00          80  317  25240.4581  0.22950231701484985 3D+10  0.0000000000000000000D+00
          -8.3100   -9.3848  0.84150849572291870 0D+10  0.0000000000000000000D+00          80  317  252
41.4821  0.22950231696519775 3D+10  0.000000000000000000D+00          -8.3300   -9.2483  0.84150849
554154494 0D+10  0.000000000000000000D+00          80  317  25242.5061  0.22950231691799926 7D+10  0.0
0000000000000000000D+00          -8.1000   -9.3296  0.84150849536482543 8D+10  0.0000000000000000000D+
00          80  317  25243.5301  0.22950231686860961 8D+10  0.0000000000000000000D+00          -8.160
0   -9.4252  0.84150849518198852 4D+10  0.000000000000000000D+00

***** JOB DONE.
$WEO LPS

$$
$AVF IN 5
DATA IGNORED
```

```
$FXC TPLIST NS

INPUT PARAMETERS ARE:  AS SR=1=1 1

  TAPE NO.    1              FILE NO.    1
   RECORD    1               LENGTH    7200

80  317  26672.2782  0.22950233992398642D+10  0.00000000000000000000D+00          -20.1600    -0.0000
  0.00000000000000000000D+00  0.00000000000000000000D+00          80  317  26672.7882  0.229502339918707
2750D+10  0.00000000000000000000D+00          -20.9700    -0.0000  0.00000000000000000000D+00  0.00000000
0000000000D+00          80  317  26673.3002  0.22950233990295715300+10  0.00000000000000000000D+00
     -20.8500    -0.0000  0.00000000000000000000D+00  0.00000000000000000000D+00          80  317  26673.
8122  0.22950233990512695200+10  0.00000000000000000000D+00          -20.6400    -0.0000  0.00000000000
0000000D+00  0.00000000000000000000D+00          80  317  26674.3242  0.22950233988717956500+10  0.0000
000000000000D+00          -20.4300    -0.0000  0.00000000000000000000D+00  0.00000000000000000000D+00
          80  317  26674.8362  0.22950233987787780700+10  0.00000000000000000000D+00          -21.1300
  -0.0000  0.00000000000000000000D+00  0.00000000000000000000D+00          80  317  26675.3482  0.2295023
39864517211D+10  0.00000000000000000000D+00          -20.9000    -0.0000  0.00000000000000000000D+00  0.
00000000000000000000D+00          80  317  26675.8602  0.22950233986600952100+10  0.00000000000000000000D
+00          -21.0300    -0.0000  0.00000000000000000000D+00  0.00000000000000000000D+00          80  317
  26676.3722  0.22950233985789895010+10  0.00000000000000000000D+00          -20.5200    -0.0000  0.000
00000000000000000D+00  0.00000000000000000000D+00          80  317  26676.8842  0.22950233983424987700+10
  0.00000000000000000000D+00          -20.1200    -0.0000  0.00000000000000000000D+00  0.00000000000000000
000D+00          80  317  26677.3962  0.22950233983494872900+10  0.00000000000000000000D+00          -2
0.6000    -0.0000  0.00000000000000000000D+00  0.00000000000000000000D+00          80  317  26677.9082  0
.22950233982887878300+10  0.00000000000000000000D+00          -21.6900    -0.0000  0.00000000000000000000
D+00  0.00000000000000000000D+00          80  317  26678.4202  0.22950233980335998400+10  0.00000000000
00000000D+00          -20.1300    -0.0000  0.00000000000000000000D+00  0.00000000000000000000D+00
 80  317  26678.9322  0.22950233980513915900+10  0.00000000000000000000D+00          -20.4600    -0.000
0  0.00000000000000000000D+00  0.00000000000000000000D+00          80  317  26679.4442  0.22950233980162
9638D+10  0.00000000000000000000D+00          -20.0300    -0.0000  0.00000000000000000000D+00  0.0000000
000000000D+00          80  317  26679.9562  0.22950233977778686510+10  0.00000000000000000000D+00
     -20.6600    -0.0000  0.00000000000000000000D+00  0.00000000000000000000D+00          80  317  26680
.4682  0.22950233978033790270+10  0.00000000000000000000D+00          -20.5600    -0.0000  0.00000000000
000000000D+00  0.00000000000000000000D+00          80  317  26680.9802  0.22950233977124938900+10  0.000
00000000000000D+00          -20.9300    -0.0000  0.00000000000000000000D+00  0.00000000000000000000D+00
          80  317  26681.4922  0.22950233974812927100+10  0.00000000000000000000D+00          -20.3200
  -0.0000  0.00000000000000000000D+00  0.00000000000000000000D+00          80  317  26682.0042  0.229502
33974886779700+10  0.00000000000000000000D+00          -20.6300    -0.0000  0.00000000000000000000D+00  0
.00000000000000000000D+00          80  317  26682.5162  0.22950233973572599800+10  0.00000000000000000000
D+00          -20.2200    -0.0000  0.00000000000000000000D+00  0.00000000000000000000D+00          80  31
7  26683.0282  0.22950233972363891500+10  0.00000000000000000000D+00          -21.1000    -0.0000  0.00
000000000000000D+00  0.00000000000000000000D+00          80  317  26683.5402  0.22950233972160949600+1
0  0.00000000000000000000D+00          -20.9100    -0.0000  0.00000000000000000000D+00  0.00000000000000
0000D+00          80  317  26684.0522  0.22950233970089721600+10  0.00000000000000000000D+00          -
20.0500    -0.0000  0.00000000000000000000D+00  0.00000000000000000000D+00          80  317  26684.5642
0.22950233969551696700+10  0.00000000000000000000D+00          -20.6400    -0.0000  0.00000000000000000
0D+00  0.00000000000000000000D+00          80  317  26685.0762  0.22950233968403930600+10  0.00000000000
00000000D+00          -20.1000    -0.0000  0.00000000000000000000D+00  0.00000000000000000000D+00
  80  317  26685.5882  0.22950233967091979900+10  0.00000000000000000000D+00          -19.7600    -0.00
00  0.00000000000000000000D+00  0.00000000000000000000D+00          80  317  26686.1002  0.2295023396720
27587D+10  0.00000000000000000000D+00          -20.9000    -0.0000  0.00000000000000000000D+00  0.000000
0000000000D+00          80  317  26686.6122  0.22950233966338806100+10  0.00000000000000000000D+00
     -20.1700    -0.0000  0.00000000000000000000D+00  0.00000000000000000000D+00          80  317  2668
7.1242  0.22950233964454956000+10  0.00000000000000000000D+00          -20.9400    -0.0000  0.000000000
000000000D+00  0.00000000000000000000D+00          80  317  26687.6362  0.22950233963457810500+10  0.00
00000000000000D+00          -20.6000    -0.0000  0.00000000000000000000D+00  0.00000000000000000000D+0
0          80  317  26688.1482  0.22950233961986999400+10  0.00000000000000000000D+00          -20.3900
  -0.0000  0.00000000000000000000D+00  0.00000000000000000000D+00          80  317  26688.6602  0.22950
23396221893300+10  0.00000000000000000000D+00          -20.3900    -0.0000  0.00000000000000000000D+00
0.00000000000000000000D+00          80  317  26689.1722  0.22950233960451965200+10  0.00000000000000000
0D+00          -20.4100    -0.0000  0.00000000000000000000D+00  0.00000000000000000000D+00          80  3
17  26689.6842  0.22950233960029907100+10  0.00000000000000000000D+00          -20.7500    -0.0000  0.0
00000000000000000D+00  0.00000000000000000000D+00          80  317  26690.1962  0.22950233958948974500+
10  0.00000000000000000000D+00          -21.2300    -0.0000  0.00000000000000000000D+00  0.00000000000000
00000D+00          80  317  26690.7082  0.22950233957391967700+10  0.00000000000000000000D+00
-20.5800    -0.0000  0.00000000000000000000D+00  0.00000000000000000000D+00          80  317  26691.2202
```

```
 0.22950233956147768D+10  0.00000000000000000D+00          -21.0100   -0.0000  0.0000000000000000
00D+00  0.00000000000000000D+00          80  317  26691.7322  0.22950233955924987 7D+10  0.000000000
000000000D+00          -20.9000   -0.0000  0.00000000000000000D+00  0.00000000000000000D+00
   80  317  26692.2442  0.22950233955239868 1D+10  0.00000000000000000D+00          -20.2100   -0.0
000  0.00000000000000000D+00  0.00000000000000000D+00          80  317  26692.7562  0.229502339539
187621D+10  0.00000000000000000D+00          -20.2400   -0.0000  0.00000000000000000D+00  0.00000
000000000000D+00          80  317  26693.2682  0.22950233952422790 4D+10  0.00000000000000000D+00
        -21.0200   -0.0000  0.00000000000000000D+00  0.00000000000000000D+00          80  317  266
93.7802  0.22950233950329894 9D+10  0.00000000000000000D+00          -20.3300   -0.0000  0.00000000
000000000D+00  0.00000000000000000D+00          80  317  26694.2922  0.22950233949939880 3D+10  0.0
000000000000000000D+00          -20.2500   -0.0000  0.00000000000000000D+00  0.00000000000000000D+
00          80  317  26694.8042  0.22950233950626831 0D+10  0.00000000000000000D+00          -20.210
0   -0.0000  0.00000000000000000D+00  0.00000000000000000D+00

***** JOB DONE.
$WEO LPS
```

```
$$
$AVF IN 8
$EXE TPLIST BS
```

```
 INPUT PARAMETERS ARE:  AS SR=1=1 1

  TAPE NO.   1              FILE NO.   1
  RECORD   1                LENGTH    7200
       1830       0031       0000       0001 04/01/81 16:30 OCEP      0 CL  D                0000       004
3       0001       0003                                                0.22013409999999904462D+08  0.22949987
0915298461D+10                                          0.00000000000000000000D+00  0.00000000000000000000D+00
                                  80  318   9900.5000  0.22950215698034057 5D+10  0.00000000000000000000D+00
    -144.7500 -135.4000  0.84150790893623657 1D+10  0.00000000000000000000D+00          80  318   9901.
5000  0.22950215754714050 2D+10  0.00000000000000000000D+00          -144.7000 -135.3000  0.84150791100
44372552+10  0.00000000000000000000D+00          80  318   9902.5000  0.22950215811224060 0D+10  0.0000
000000000000D+00          -144.7000 -135.3000  0.84150791307823486 1D+10  0.00000000000000000000D+00
        80  318   9903.5000  0.22950215867463989 2D+10 -0.00000000000000000000D+00          -144.7000 -
135.3000  0.84150791915003666 9D+10  0.00000000000000000000D+00          80  318   9904.5000  0.2295021
5924306389396D+10  0.00000000000000000000D+00          -144.7000 -135.3000  0.84150791721153564 3D+10 -0.
00000000000000000000D+00          80  318   9905.5000  0.22950215980693969 6D+10  0.00000000000000000000D
+00          -144.7000 -135.3000  0.84150791928813476 4D+10  0.00000000000000000000D+00          80  318
   9906.5000  0.22950216037434081 9D+10  0.00000000000000000000D+00          -144.7500 -135.3500  0.841
50792136623535 0D+10  0.00000000000000000000D+00          80  318   9907.5000  0.22950216093473815 8D+10
  0.00000000000000000000D+00          -144.8000 -135.4000  0.84150792343393554 5D+10  0.0000000000000000
0000D+00          80  318   9908.5000  0.22950216150293884 2D+10  0.00000000000000000000D+00          -14
4.8000 -135.4000  0.84150792549893798 7D+10  0.00000000000000000000D+00          80  318   9909.5000  0
.22950216206533813 4D+10  0.00000000000000000000D+00          -144.8000 -135.4000  0.84150792757223510 6
D+10  0.00000000000000000000D+00          80  318   9910.5000  0.22950216262824096 6D+10 -0.0000000000000
00000000D+00          -144.8000 -135.4000  0.84150792963683471 5D+10 -0.00000000000000000000D+00
 80  318   9911.5000  0.22950216319345872 0D+10  0.00000000000000000000D+00          -144.8000 -135.400
0  0.84150793171893310 4D+10  0.00000000000000000000D+00          80  318   9912.5000  0.22950216375924
0722D+10  0.00000000000000000000D+00          -144.8000 -135.4000  0.84150793377753295 7D+10 -0.0000000
000000000000D+00          80  318   9913.5000  0.22950216432353820 7D+10  0.00000000000000000000D+00
     -144.8000 -135.4000  0.84150793585483398 3D+10  0.00000000000000000000D+00          80  318   9914
.5000  0.22950216486234008 7D+10  0.00000000000000000000D+00          -144.8000 -135.4000  0.8415079379
2243652 0D+10  0.00000000000000000000D+00          80  318   9915.5000  0.22950216544894103 9D+10 -0.000
0000000000000000D+00          -144.7000 -135.3500  0.84150793999643554 5D+10  0.00000000000000000000D+00
        80  318   9916.5000  0.22950216602023925 7D+10  0.00000000000000000000D+00          -144.6000
-135.3000  0.84150794206103513 5D+10  0.00000000000000000000D+00          80  318   9917.5000  0.229502
1665829406730+10  0.00000000000000000000D+00          -144.6000 -135.3000  0.84150794413233642 4D+10  0
.00000000000000000000D+00          80  318   9918.5000  0.22950216714594116 1D+10  0.0000000000000000000
D+00          -144.6000 -135.3000  0.84150794620033569 2D+10  0.00000000000000000000D+00          80  31
8   9919.5000  0.22950216770903930 6D+10  0.00000000000000000000D+00          -144.6000 -135.3000  0.84
15079482707336400+10  0.00000000000000000000D+00          80  318   9920.5000  0.22950216827783813 4D+1
0  0.00000000000000000000D+00          -144.6000 -135.3000  0.84150795034183349 4D+10  0.0000000000000000
0000D+00          80  318   9921.5000  0.22950216883733825 6D+10  0.00000000000000000000D+00          -1
44.6000 -135.3500  0.84150795241093749 8D+10  0.00000000000000000000D+00          80  318   9922.5000
0.22950216940243635 4D+10  0.00000000000000000000D+00          -144.6000 -135.4000  0.84150795448433227
4D+10  0.00000000000000000000D+00          80  318   9923.5000  0.22950216996593933 0D+10  0.0000000000
000000000D+00          -144.6000 -135.4000  0.84150795654693603 4D+10  0.00000000000000000000D+00
  80  318   9924.5000  0.22950217053403930 6D+10  0.00000000000000000000D+00          -144.6000 -135.40
00  0.84150795861673583 8D+10  0.00000000000000000000D+00          80  318   9925.5000  0.2295021710968
38378D+10  0.00000000000000000000D+00          -144.6000 -135.4000  0.84150796068673705 9D+10  0.000000
0000000000D+00          80  318   9926.5000  0.22950217165823974 5D+10  0.00000000000000000000D+00
     -144.6000 -135.4000  0.84150796274303588 7D+10 -0.00000000000000000000D+00          80  318   992
7.5000  0.22950217221899208 0D+10 -0.00000000000000000000D+00          -144.7000 -135.5000  0.841507964
81523437 3D+10  0.00000000000000000000D+00          80  318   9928.5000  0.22950217278703918 4D+10  0.00
0000000000000000D+00          -144.8000 -135.6000  0.84150796688853759 6D+10  0.00000000000000000000D+0
0          80  318   9929.5000  0.22950217334943847 6D+10  0.00000000000000000000D+00          -144.8000
 -135.6000  0.84150796895253295 7D+10  0.00000000000000000000D+00          80  318   9930.5000  0.22950
2173915939550D+10  0.00000000000000000000D+00          -144.8000 -135.6000  0.84150797102823486 2D+10
0.00000000000000000000D+00          80  318   9931.5000  0.22950217449383940 1D+10  0.00000000000000000
00D+00          -144.8000 -135.6000  0.84150797309693603 3D+10  0.00000000000000000000D+00          80  3
18   9932.5000  0.22950217504123840 2D+10  0.00000000000000000000D+00          -144.8000 -135.6000  0.8
41507973158636472D+10  0.00000000000000000000D+00          80  318   9933.5000  0.22950217560683898 8D+
10  0.00000000000000000000D+00          -144.8000 -135.6000  0.84150797721943359 2D+10  0.00000000000000
000000D+00          80  318   9934.5000  0.22950217617143859 8D+10  0.00000000000000000000D+00          -
144.8000 -135.6000  0.84150797930246330 2D+10  0.00000000000000000000D+00          80  318   9935.5000
 0.22950217673993859 8D+10  0.00000000000000000000D+00          -144.8000 -135.6000  0.84150798135703731
```

9/1 Saturn
November 13, 1980

```
51D+10  0.0000000000000000000D+00          80  318   9936.5000  0.22950217730064086 8D+10  0.0000000000
000000000D+00          -144.8000 -135.6000  0.8415079834248352040+10  0.0000000000000000000D+00
    80  318   9937.5000  0.22950217748699396 97D+10 -0.0000000000000000000D+00          -144.8000 -135.6
000  0.8415079854958325180+10  0.0000000000000000000D+00          80  318   9938.5000  0.229502178429
040526D+10  0.0000000000000000000D+00          -144.8000 -135.6000  0.8415079875624328590+10  0.00000
0000000000000D+00          80  318   9939.5000  0.22950217898594055 1D+10 -0.0000000000000000000D+00
       -144.8000 -135.6000  0.8415079889209350570+10  0.0000000000000000000D+00          80  318   99
40.5000  0.2295021795607385250+10  0.0000000000000000000D+00          -144.8000 -135.6000  0.84150799
1691436766D+10  0.0000000000000000000D+00          80  318   9941.5000  0.22950218011964 1113D+10  0.0
0000000000000000D+00          -144.8000 -135.6000  0.8415079937546325670+10  0.0000000000000000000D+
00          80  318   9942.5000  0.22950218067593994 0D+10 -0.0000000000000000000D+00          -144.750
0 -135.6000  0.8415079958213378890+10  0.0000000000000000000D+00

***** JOB DONE.
$AVF IN 14
$BKR IN 2
$EXE TPLIST BS

INPUT PARAMETERS ARE:  AS SR=1=1 1

 TAPE NO.   1              FILE NO.   1
 RECORD   1                LENGTH   5600
80  318  17965.5000  0.2295058963236755 36D+10  0.0000000000000000000D+00          -149.2000 -135.0000
  0.8415216198237426740+10  0.0000000000000000000D+00          80  318  17966.5000  0.229505896556774
901D+10  0.0000000000000000000D+00          -149.2000 -135.0000  0.8415216207393432600+10  0.00000000
0000000000D+00          80  318  17967.5000  0.2295058968120727 53D+10  0.0000000000000000000D+00
    -149.1000 -134.9000  0.8415216216434387190+10  0.0000000000000000000D+00          80  318  17968.
5000  0.2295058970617767320+10  0.0000000000000000000D+00          -149.1000 -134.9000  0.84152162255
1440428D+10  0.0000000000000000000D+00          80  318  17969.5000  0.2295058973003723 13D+10  0.0000
0000000000000D+00          -149.1000 -134.9000  0.8415216234548400 86D+10  0.0000000000000000000D+00
       80  318  17970.5000  0.2295058975606750 48D+10  0.0000000000000000000D+00          -149.1000 -
134.9000  0.8415216243622436510+10  0.0000000000000000000D+00          80  318  17971.5000  0.2295058
977985748280+10  0.0000000000000000000D+00          -149.1000 -134.9000  0.8415216252625366190+10  0.
0000000000000000000D+00          80  318  17972.5000  0.2295058980405731190+10  0.0000000000000000000D
+00          -149.1000 -134.9000  0.8415216261741394030+10  0.0000000000000000000D+00          80  318
  17973.5000  0.2295058983048746 84D+10  0.0000000000000000000D+00          -149.1000 -134.9000  0.841
5216270866394030+10  0.0000000000000000000D+00          80  318  17974.5000  0.2295058985434753 41D+10
  0.0000000000000000000D+00          -149.1000 -134.9000  0.8415216279916442850+10  0.0000000000000000
000D+00          80  318  17975.5000  0.2295058987873748 77D+10  0.0000000000000000000D+00          -14
9.1000 -134.9000  0.8415216288939392080+10  0.0000000000000000000D+00          80  318  17976.5000  0
.2295058990392730 70D+10  0.0000000000000000000D+00          -149.1000 -134.8000  0.8415216298028381330
D+10  0.0000000000000000000D+00          80  318  17977.5000  0.2295058992885742 18D+10  0.0000000000
00000000D+00          -149.1000 -134.8000  0.8415216307046386 70D+10  0.0000000000000000000D+00
  80  318  17978.5000  0.2295058995244750 97D+10  0.0000000000000000000D+00          -149.1000 -134.800
0  0.8415216316114379870+10  0.0000000000000000000D+00          80  318  17979.5000  0.22950589977957
4584D+10  0.0000000000000000000D+00          -149.1000 -134.8000  0.8415216325223388660+10  0.0000000
000000000000D+00          80  318  17980.5000  0.2295059000217742 91D+10  0.0000000000000000000D+00
      -149.1000 -134.8000  0.8415216334171447740+10  0.0000000000000000000D+00          80  318  17981
.5000  0.2295059002720733 63D+10  0.0000000000000000000D+00          -149.1000 -134.8000  0.8415216343
26239011D+10  0.0000000000000000000D+00          80  318  17982.5000  0.2295059005215759 27D+10  0.000
0000000000000D+00          -149.1000 -134.7000  0.8415216352352416 98D+10  0.0000000000000000000D+00
          80  318  17983.5000  0.2295059007637725 82D+10  0.0000000000000000000D+00          -149.1000
-134.7000  0.8415216361433410630+10  0.0000000000000000000D+00          80  318  17984.5000  0.229505
9010158752430+10  0.0000000000000000000D+00          -149.1000 -134.7000  0.8415216370478393540+10  0
.0000000000000000000D+00          80  318  17985.5000  0.2295059012591735 83D+10  0.0000000000000000000
D+00          -149.1000 -134.7000  0.8415216379523437480+10  0.0000000000000000000D+00          80  31
8  17986.5000  0.2295059015094757 07D+10  0.0000000000000000000D+00          -149.1000 -134.7000  0.84
1521638856237791D+10  0.0000000000000000000D+00          80  318  17987.5000  0.2295059017521728 51D+1
0  0.0000000000000000000D+00          -149.1000 -134.7000  0.8415216397644409 16D+10  0.0000000000000
00000D+00          80  318  17988.5000  0.2295059019986755 36D+10  0.0000000000000000000D+00          -1
49.1000 -134.7000  0.8415216406646362290+10  0.0000000000000000000D+00          80  318  17989.5000
0.2295059022451721180+10  0.0000000000000000000D+00          -149.1000 -134.7000  0.8415216415762451 1
6D+10  0.0000000900000000000D+00          80  318  17990.5000  0.2295059024944763 18D+10  0.0000000000
000000000D+00          -149.1000 -134.7000  0.8415216424697387 68D+10  0.0000000000000000000D+00
  80  318  17991.5000  0.2295059027370727 53D+10  0.0000000000000000000D+00          -149.1000 -134.60
00  0.8415216433853393540+10  0.0000000000000000000D+00          80  318  17992.5000  0.2295059029876
```

```
739459+10  0.000000000000000000D+00          -149.1000 -134.6000  0.8415216442842407210+10  0.000000
0000000000D+00          80  318  17993.6000  0.2295059032340759270+10  0.00000000000000000000D+00
      -149.1000 -134.6000  0.8415216451906433090+10  0.00000000000000000000D+00          80  318  1799
4.5000  0.2295059034807739250+10  0.00000000000000000000D+00          -149.1000 -134.6000  0.841521646
0959411610+10  0.000000000000000000000+00          80  318  17995.5000  0.2295059037254730220+10  0.00
0000000000000000+00          -149.1000 -134.6000  0.8415216469903381330+10  0.00000000000000000000D+0
0          80  318  17996.5000  0.2295059039719757070+10  0.00000000000000000000D+00          -149.1000
 -134.6000  0.8415216479011413560+10  0.00000000000000000000D+00          80  318  17997.5000  0.22950
5904220074462D+10  0.000000000000000000D+00          -149.1000 -134.6000  0.8415216488061401350+10
0.000000000000000000D+00          80  318  17998.5000  0.2295059044618743890+10  0.00000000000000000
00D+00          -149.1000 -134.6000  0.8415216497057434060+10  0.00000000000000000000D+00          80  3
16  17999.5000  0.2295059047148742670+10  0.00000000000000000000D+00          -149.1000 -134.6000  0.8
4152165061453857 0+10  0.000000000000000000D+00
```

***** JOB DONE.
$AVF IN 16
$EXE TPLIST 65

INPUT PARAMETERS ARE: AS SR=1=1 1

```
 TAPE NO.   1              FILE NO.   1
 RECORD   1                LENGTH   7200
      2328       0032        0000        0001 08/26/81 05:08 OCEP       CL  A                    0000       004
3       0001       C003                                          0.2202899999995999950+08  0.22965980
0904949950D+10                                  0.00000000000000000000D+00  0.00000000000000000000D+00
                          81  238  18900.2000  0.2296156588511882934D+10  0.00000000000000000000D+00
    -143.9000 -132.5000  0.8419240824634643530+10  0.00000000000000000000D+00          81  238  18900.
6000  0.2296156592343841550+10  0.00000000000000000000D+00          -143.9000 -132.5000  0.84192408388
3966063D+10  0.00000000000000000000D+00          81  238  18901.0000  0.2296156596046325670+10  0.0000
0000000000000+00          -143.9000 -132.5000  0.8419240852702209460+10  0.00000000000000000000D+00
          81  238  18901.4000  0.2296156600033843990+10  0.00000000000000000000D+00          -143.9000 -
132.5000  0.8419240866872192360+10  0.00000000000000000000D+00          81  238  18901.8000  0.2296156
6038838836660+10  0.00000000000000000000D+00          -143.9000 -132.5000  0.8419240880717163070+10  0.
0000000000000000000D+00          81  238  18902.2000  0.2296156607726318350+10  0.00000000000000000000D
+00          -143.9000 -132.5000  0.8419240894962219220+10  0.00000000000000000000D+00          81  238
  18902.6000  0.2296156611411315910+10  0.00000000000000000000D+00          -143.9000 -132.5000  0.841
9240906469725D+10  0.00000000000000000000D+00          81  238  18903.0000  0.2296156615411346430+10
  0.00000000000000000000D+00          -143.9000 -132.5000  0.8419240922982177710+10  0.00000000000000000
000D+00          81  238  18903.4000  0.2296156619111328120+10  0.00000000000000000000D+00          -14
3.9000 -132.5000  0.8419240937177185040+10  0.00000000000000000000D+00          81  238  18903.8000  0
.2296156622961334220+10  0.00000000000000000000D+00          -143.9000 -132.5000  0.8419240950959656574
0+10  0.00000000000000000000D+00          81  238  18904.2000  0.2296156626846343980+10  0.00000000000
00000000D+00          -143.9000 -132.5000  0.8419240965089660630+10  0.00000000000000000000D+00
 81  238  18904.6000  0.2296156630703826890+10  0.00000000000000000000D+00          -143.9000 -132.500
0  0.8419240979227172840+10  0.00000000000000000000D+00          81  238  18905.0000  0.2296156634361 3
2812D+10  0.00000000000000000000D+00          -143.9000 -132.5000  0.8419240993154663070+10  0.0000000
000000000000D+00          81  238  18905.4000  0.2296156638373840330+10  0.00000000000000000000D+00
     -143.9000 -132.5000  0.8419241007424743630+10  0.00000000000000000000D+00          81  238  18905
.8000  0.2296156642146331780+10  0.00000000000000000000D+00          -143.9000 -132.5000  0.8419241021
2871703D+10  0.00000000000000000000D+00          81  238  18906.2000  0.2296156645918823230+10  0.000
0000000000000D+00          -143.9000 -132.5000  0.8419241035347228990+10  0.00000000000000000000D+00
         81  238  18906.6000  0.2296156649881347650+10  0.00000000000000000000D+00          -143.9000
-132.5000  0.8419241049187194810+10  0.00000000000000000000D+00          81  238  18907.0000  0.229615
6653628845210+10  0.00000000000000000000D+00          -143.9000 -132.5000  0.8419241063677185050+10  0
.0000000000000000000D+00          81  238  18907.4000  0.2296156657483825680+10  0.00000000000000000000
D+00          -143.9000 -132.5000  0.8419241077482238750+10  0.00000000000000000000D+00          81  23
8  18907.8000  0.2296156661246337880+10  0.00000000000000000000D+00          -143.9000 -132.5000  0.84
1924109129968260D+10  0.00000000000000000000D+00          81  238  18908.2000  0.2296156665178833000+1
0  0.00000000000000000000D+00          -143.9000 -132.5000  0.8419241105764709460+10  0.0000000000000
00000D+00          81  238  18908.6000  0.2296156668968841550+10  0.00000000000000000000D+00          -1
43.9000 -132.5000  0.8419241119812255840+10  0.00000000000000000000D+00          81  238  18909.0000
0.2296156672848846430+10  0.00000000000000000000D+00          -143.9000 -132.5000  0.8419241133747192 3
6D+10  0.00000000000000000000D+00          81  238  18909.4000  0.2296156676463836660+10  0.0000000000
000000000D+00          -143.9000 -132.5000  0.8419241147662231430+10  0.00000000000000000000D+00
  81  238  18909.8000  0.2296156680528839100+10  0.00000000000000000000D+00          -143.9000 -132.50
00  0.8419241161789714340+10  0.00000000000000000000D+00          81  238  18910.2000  0.2296156684246
```

V2 Saturn
August 26, 1981

```
3378BD+10  0.0000000000000000000D+00          -143.9000 -132.5000  0.8419241175989685040+10  0.000000
0000000000D+00          81  238  18910.6000  0.2296156688173828120+10  0.00000000000000000000D+00
        -143.9000 -132.5000  0.8419241189892211900+10  0.00000000000000000000D+00          81  238  1891
1.0000  0.2296156691993835440+10  0.00000000000000000000D+00          -143.9000 -132.5000  0.841924120
3972167900+10  0.0000000000000000000D+00          81  238  18911.4000  0.2296156695726318350+10  0.00
0000000000000000D+00          -143.9000 -132.5000  0.8419241218014709450+10  0.0000000000000000000D+0
0          81  238  18911.8000  0.2296156699718841540+10  0.00000000000000000000D+00          -143.9000
 -132.5000  0.8419241232022216780+10  0.00000000000000000000D+00          81  238  18912.2000  0.22961
567033451324450+10  0.0000000000000000000D+00          -143.9000 -132.5000  0.8419241246052185040+10
0.00000000000000000000D+00          81  238  18912.6000  0.2296156707331329340+10  0.0000000000000000
00D+00          -143.9000 -132.5000  0.8419241260337219220+10  0.00000000000000000000D+00          81  2
38  18913.0000  0.2296156711068847850+10  0.00000000000000000000D+00          -143.9000 -132.5000  0.8
4192412742596435400+10  0.0000000000000000000D+00          81  238  18913.4000  0.2296156714848846430+
10  0.00000000000000000000D+00          -143.9000 -132.5000  0.8419241288159728990+10  0.0000000000000
00000D+00          81  238  18913.8000  0.2296156718828826900+10  0.00000000000000000000D+00          -
143.9000 -132.5000  0.8419241302264709450+10  0.00000000000000000000D+00          81  238  18914.2000
 0.2296156722641326890+10  0.00000000000000000000D+00          -143.9000 -132.5000  0.8419241316435697
250+10  0.00000000000000000000D+00          81  238  18914.6000  0.2296156726428833000+10  0.000000000
0000000000D+00          -143.9000 -132.5000  0.8419241330342224100+10  0.00000000000000000000D+00
   81  238  18915.0000  0.2296156730248840320+10  0.00000000000000000000D+00          -143.9000 -132.5
000  0.8419241344532226550+10  0.00000000000000000000D+00          81  238  18915.4000  0.229615673406
8847650+10  0.00000000000000000000D+00          -143.9000 -132.5000  0.8419241358562194810+10  0.00000
0000000000000D+00          81  238  18915.8000  0.2296156737955132445D+10  0.00000000000000000000D+00
        -143.9000 -132.5000  0.8419241372504699690+10  0.00000000000000000000D+00          81  238  189
16.2000  0.2296156741806335440+10  0.00000000000000000000D+00          -143.9000 -132.5000  0.84192413
8661474607D+10  0.00000000000000000000D+00          81  238  18916.6000  0.2296156745568878160+10  0.0
0000000000000000000D+00          -143.9000 -132.5000  0.8419241400849731420+10  0.00000000000000000000D+
00          81  238  18917.0000  0.2296156749403839100+10  0.00000000000000000000D+00          -143.900
0 -132.5000  0.8419241414594665510+10  0.00000000000000000000D+00

***** JOB DONE.
$AVF IN 22
$BKR IN 2
$EXE TPLIST BS

INPUT PARAMETERS ARE:  AS SR=1=1 1

 TAPE NO.    1              FILE NO.    1
 RECORD    1                LENGTH    640
81  238  26399.7000  0.2296215530174835190+10  0.00000000000000000000D+00          -144.0000 -132.7000
  0.8419456944307556140+10  0.00000000000000000000D+00          81  238  26400.1000  0.2296215532179840
008D+10  0.00000000000000000000D+00          -144.0000 -132.7000  0.8419456951700012190+10  0.00000000
0000000000D+00          81  238  26400.5000  0.2296215534234832750+10  0.00000000000000000000D+00
    -144.0000 -132.7000  0.8419456958872558580+10  0.00000000000000000000D+00          81  238  26400.
8000  0.2296215535722412100+10  0.00000000000000000000D+00          -144.0000 -132.7000  0.84194569644
8760985D+10  0.00000000000000000000D+00

***** JOB DONE.
$WEO LPS

$$
```

REQ. AGENT

JAR

ACQ. AGENT

PSB

VOYAGER 2
RADIO OCCULATION, URANUS ENCTR

77-076A-02F

This data set consists of 15 tapes. These tapes are 6250 BPI, 9TRK, ASCII and were created on VAX-8650 computer. The D and C numbers and the time span are as follows:

D	C	FILES	TIME SPAN
D-78841	C-27550	16	01/24/86 - 01/24/86
D-78842	C-27551	16	01/24/86 - 01/25/86
D-78843	C-27552	16	01/25/86 - 01/25/86
D-78844	C-27553	16	01/24/86 - 01/24/86
D-78845	C-27554	16	01/24/86 - 01/25/86
D-78846	C-27555	16	01/25/86 - 01/25/86
D-78847	C-27556	16	01/24/86 - 01/24/86
D-78848	C-27557	16	01/24/86 - 01/25/86
D-78849	C-27558	16	01/25/86 - 01/25/86
D-78850	C-27559	13	01/24/86 - 01/24/86
D-78851	C-27560	13	01/24/86 - 01/25/86
D-78852	C-27561	13	01/25/86 - 01/25/86
D-78853	C-27562	13	01/25/86 - 01/25/86
D-78854	C-27563	116	01/24/86 - 01/25/86
D-78855	C-27564	48	01/24/86 - 01/25/86

CENTER FOR RADAR ASTRONOMY
STANFORD UNIVERSITY
DEPARTMENT OF ELECTRICAL ENGINEERING
STANFORD, CALIFORNIA 94305-4055

April, 5, 1988

Dr. Paul S. Butterworth
NSSDC Code 633.4
Goddard Space Flight Center
Greenbelt, MD 20771

Dear Paul:

On 24 August 1987 I sent you fifteen tapes and a documentation package, representing archival data from the Voyager Radio Science Team occultation experiment(s) at Uranus.

Another recipient of the archival data set has identified a problem on two of the tapes. That is, data which I had intended to archive as standard 80-character card images exceeds the 80 character limit and is truncated.

I have reformatted those files (the last two files on both tapes 14 and 15) into "supercard" images of 120 characters each. The two tapes enclosed here should be substituted for tapes 14 and 15 in the original data set.

I am also enclosing a revised copy of the documentation. The pages which have changed (except for the first page) are so annotated in the lower right corner. Page 17 was a duplicate of page 18. A couple times have been corrected on page 23. Otherwise the changes relate to the formatting problem noted above.

If you have questions, please don't hesitate to contact me.

Best regards,

Richard A. Simpson
415-723-3525

Encl:

cc: G.L. Tyler

Voyager Radio Science Experiment

Voyager 2
Radio Occultation by Uranus (24-25 January 1986)

Archival Data Set:
Filtered and Decimated (FND) Time Samples
from Canberra and Parkes

15 magnetic tapes plus documentation
9-track
6250 bpi

Forwarded to NSSDC
21 August 1987

(revised: 30 March 1988)

Prepared by:
Richard A. Simpson
Center for Radar Astronomy
Stanford University
Stanford, CA 94305-4055
415-723-3525

VOYAGER - RADIO SCIENCE TEAM
Uranus Radio Occultation Data Set
(21 August 1987)

(revised: 30 March 1988)

Voyager 2 was occulted by Uranus, its rings, and atmosphere on 24-25 January 1986. During that period the spacecraft telecommunication system was used for active, remote probing of the planet and its environment at radio frequencies (wavelengths of 3.6 and 13 cm).

This documentation describes the Voyager radio science "FND" data set provided to NSSDC for archiving. These data have been partially processed (to reduce data volume, but without compromising the science value). The documentation explains how the data were acquired and how that processing has been conducted. Also included are notes which explain particular aspects of the data and calibrations/corrections which the user may wish to apply.

This documentation is included as file 0 on archive data tapes. Since some of the material (e.g., graphics) cannot be transferred electronically, hard-copy documentation is also being provided to NSSDC. The hard-copy material may also be slightly more up-to-date, so users are encouraged to use that if it is available.

The archive data set includes data from two radio receiving sites - the Canberra Deep Space Communications Complex and the Parkes Radio Astronomy Observatory. Canberra data are from two antennas at both 3.6 and 13 cm wavelengths; Parkes data are from a single antenna at 3.6 cm. All data are in the form of complex time samples with leading header records.

The data are provided at two stages in processing. FND8 data have been reduced by a factor of 8 in the number of samples from the original data set. FND8/STEER1/FND8 data have been further processed to move the spacecraft signal to the center of the retained frequency passband and have then been reduced in volume by another factor of 8.

Data Acquisition and Distribution:

Radio Science data were obtained during the Uranus occultation using three antennas in Australia. At the Canberra Deep Space Communications Complex, data were acquired at 13 cm wavelength (S-band) using 34- and 64-m diameter antennas (DSS42 and DSS43, respectively). Data were also acquired at 3.6 cm wavelength (X-band) using DSS43. At the Parkes Radio Astronomy Observatory (designated DSS49) data were acquired at 3.6 cm wavelength using a 64-m diameter antenna.

Canberra data were acquired coherently from both antennas at both wavelengths. Local oscillators referenced to a common, highly-stable time/frequency standard were used to mix all signals to 0-25 kHz baseband outputs, where they were coherently sampled and digitized. One computer-driven local oscillator (POCA) was used to track the drifting signal during the observation period. The data rate from each of the three channels was 50000 8-bit samples per second. These data were recorded on computer-compatible digital tape and shipped to JPL for distribution to Radio Science Team investigators. For logging purposes, these have been assigned tape numbers in the UC-nnnn series, where nnnn is a four-digit number. Each UC-series tape contains approximately 8 minutes of data from all three Canberra channels; tape density is 6250 bpi. POCA data are included in header records.

The signal at Parkes was mixed to a 0-40 kHz baseband using local oscillators referenced to a highly stable time/frequency standard. One local oscillator (POCA) was computer-driven to compensate for Doppler drift during the observation period. The baseband signal was sampled and digitized. The data rate to computer-compatible tapes was 80000 8-bit samples per second. Each tape contains about 400 seconds of data; tape density is 1600 bpi. POCA data are included in header records. Parkes tapes were shipped to JPL, where they were assigned numbers in the UL-nnnn series; they were then distributed to Radio Science investigators.

Filtering and Decimation (FND8 data set):

POCA tracking was sufficiently accurate that Voyager signals remained within a 10% segment of the recorded passband. It was thus possible to apply simple digital filtering techniques to reduce the number of data samples by a factor of 8 without fear of compromising science results.

Stanford implemented the digital "filtering and decimation" (FND) algorithm as follows:

1) Fourier transform 8-bit samples #0 through #1023; this provides a spectrum with 512 complex voltage values
2) In the frequency domain, extract a window of 64 consecutive values which brackets the desired signal
3) Compute the inverse transform of these 64 values; this provides a time series of 64 complex voltage values
4) Save the center 32 complex time samples
5) Fourier transform 8-bit samples #512 through #1535 and repeat the process

STANFORD PROCESSING TO PRODUCE ARCHIVE DATA TAPES

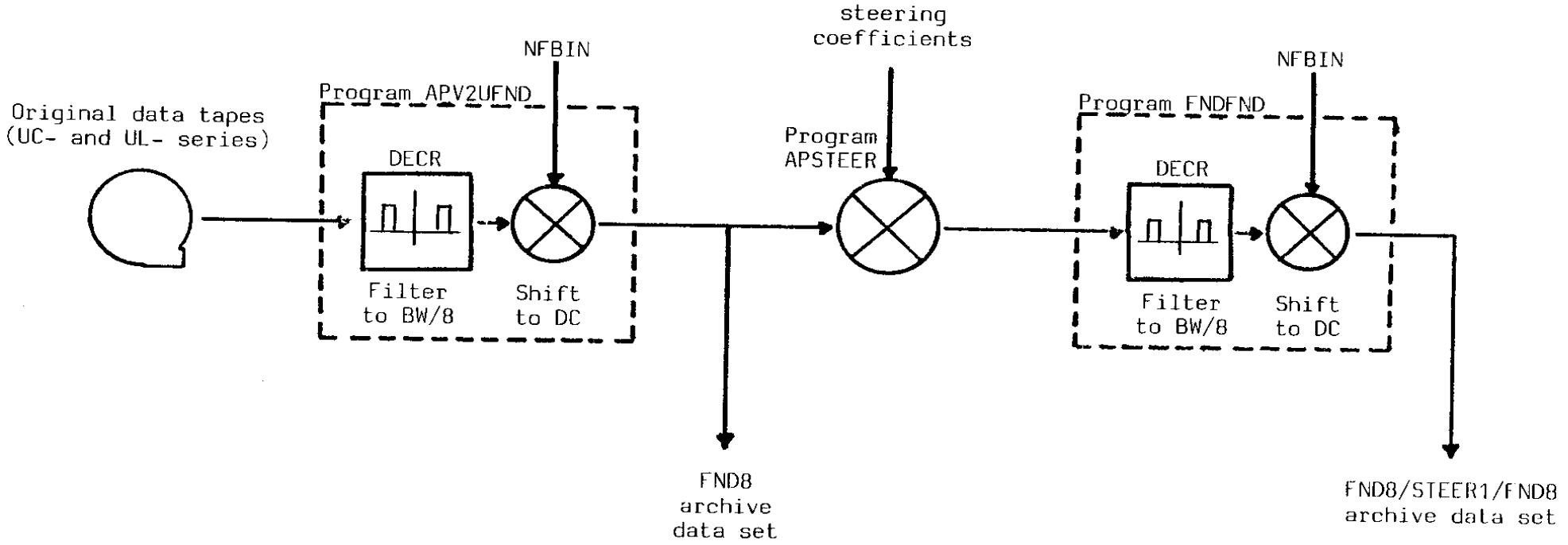

Overview of Stanford processing: Original data samples arrive on UC- (Canberra) or UL- (Parkes) data tapes. First stage of filtering and decimation reduces sample volume (and data bandwidth) by a factor of 8. Steering centers desired signal in retained passband. Second stage of filtering and decimation reduces sample number (and bandwidth) by an additional factor of 8. Original tapes contain 8-bit real samples equally spaced in time; archive data sets contain complex samples (16-bit real, 16-bit imaginary) equally spaced in time.

The frequency window (step 2) must remain fixed so long as coherent samples are desired; for Uranus the same window was used for processing the entire observing period. Processing parameters (including window definition) are described in Appendix D. NFBIN is the processing parameter that identifies the first frequency bin to be retained in the spectrum (NFBIN=201 for Canberra at 3.6 cm wavelength; NFBIN=269 at Parkes); DECR indicates the length of the window (DECR=8, for 1/8 of the original spectrum width).

Computation of the inverse transform (step 3) presumes the window has been shifted to zero frequency. Parameters FFREQ and LFREQ give the first and last frequencies (respectively) -- as the window appeared in the original spectrum -- in Hz. For Canberra with NFBIN=201, the filtered time samples have undergone a frequency shift of FFREQ=9765.625 Hz compared with the original UC-series data. With Parkes data (NFBIN=269) the shift is by FFREQ=20937.5 Hz compared with data on the UL-series tapes.

Filtering introduces artifacts. The inverse transform of the windowed data includes large transients near the beginning and end of the recovered complex time series. To minimize these effects, the filtering algorithm retains only the center 32 data points (step 4). Since the second Fourier transform overlaps the first by 50% (step 5), no subsequent data are lost so long as the pattern of 50% retention and 50% overlap continues. 16 points are lost at the very beginning (reflected in parameter TREF, which is cumulative since succeeding stages of digital filtering will result in more lost data at the beginning), and at least 16 points will be lost at the end. TFIRST is also adjusted; it gives exactly the time of the first point which actually appears in the data record.

The data which appear on archival FND8 tapes are thus complex time samples starting from TFIRST. They are a filtered version of the original 8-bit samples acquired at the receiving site. Their frequency has been shifted downward by an amount FFREQ as a result of the FND process AND they represent a bandwidth only 1/8 as large as that of the original 8-bit samples. The original frequency (as seen at the antenna) may be reconstructed from knowledge of the receiver configuration and POCA values (see documentation by D.L. Gresh elsewhere). FND8 data are fully continuous and coherent to limits set by the spacecraft ultra-stable oscillator (USO), which has an Allan variance on the order of a few parts in 10**12 [NB: an equipment malfunction at Parkes caused a 30-second loss of data near 23:42; this, obviously, represents a discontinuity in the data stream].

Nine tapes containing FND8 data from Canberra and four tapes containing FND8 data from Parkes are included in the archival data set.

Steering and Further Filtering (FND8/STEER1/FND8 data set):

Since additional filtering with constant window position and width would result in data loss, the next step in Stanford processing was "steering," or digital mixing, to move the desired signal to the center of the retained passband. Once the signal was steered, continued filtering was possible to arbitrarily narrow bandwidths, subject to USO and ground equipment stability limits and the accuracy of the steering process itself.

Steering is equivalent to mixing with analog signals; the data signal is multiplied by a (constant-amplitude) second signal which has variable frequency (or, more generally, variable phase). If the frequency of the second signal is chosen to mimic precisely the frequency of the data signal, but with opposite sign, the product is a complex voltage at zero frequency (DC). For Uranus data the mixing frequency was chosen to place the product at precisely the center of the retained passband, rather than at DC.

The frequency of the second signal was derived from knowledge of the USO frequency, the spacecraft trajectory, motion of the receiving station on a rotating earth, planetary ephemerides, the receiving system configuration, and the history of the computer-driven (POCA) local oscillator at each station. Corrections were also included for special and general relativity effects. Over intervals of typically a few hundred seconds, the frequency of the mixing signal could be approximated by a third-order polynomial. Coefficients for the steering polynomial (and time intervals over which they are valid) are included in files at the end of FND8/STEER1/FND8 archive data tapes.

The steered data thus represent the best Stanford reconstruction of the EXPERIMENTAL signal. That is, the steered data have all known geometrical and instrumental effects which affect frequency removed; some long-term residuals (tens to thousands of seconds) no doubt remain, but short term frequency/phase phenomena should be planet-related. Stanford has applied additional steering (STEER2, STEER3, etc.) to attempt correction of these less well-defined effects, but those data are not included in the archival set.

Frequency changes resulting from ray passage through Uranus' atmosphere represent an exception; phase retardation by the neutral gas is so extreme that centering the spacecraft signal in the passband is impossible without adopting a model atmosphere and deriving new polynomial coefficients. A simple model was used to derive the original POCA tuning "profile" and more sophisticated models have since been derived from the experimental data, but no model has been reintroduced at the steering stage to center the received signal. Instead, empirical steering coefficients have been used to place the data signal within 20 Hz of the passband center; these coefficients, in conjunction with measured residuals, have been used to infer atmospheric structure. Thus users of steered data (the FND8/STEER1/FND8 data set) from atmospheric occultation periods should not expect the signal to be perfectly centered.

After digital mixing, with the spacecraft signal at the center of the passband, a further stage of FND processing was applied. In this case the bandwidth (and time sample number) reduction was again by a factor of 8. FND8/STEER1/FND8 data sets from Canberra thus represent bandwidths of 390.625 Hz (inter-sample period of 2.56 milliseconds). FND8/STEER1/FND8 data from Parkes cover 625 Hz bandwidth (1.6 milliseconds per complex time sample).

Amplitude Corrections:

No attempt has been made to correct either FND8 or FND8/STEER1/FND8 data for amplitude variations introduced by spacecraft or ground equipment. Both are known to be important; the total degradation in signal level exceeds 1 dB in some cases. See Appendix H for a FORTRAN77 subprogram which can be used to correct for known spacecraft antenna pointing errors; see Appendix I for a FORTRAN77 subprogram which can be used to correct for known DSS43 antenna pointing errors. The DSS42 antenna only operated at S-band and is not believed to be a source of measurable error. The Parkes antenna (DSS49) contributed to amplitude fluctuations, but those are believed generally small compared with spacecraft sources of error; no attempt has been made to reconstruct Parkes pointing.

Further Information:

For further information or clarification, see the references below or contact Dick Simpson (415-723-3525) or G. Leonard Tyler (415-723-3535) at Center for Radar Astronomy, Stanford Electronics Laboratories, Stanford University, Stanford, CA 94305-4055. On questions about atmospheric data (and steering applied thereto) contact David Hinson (415-723-3534) at the same address.

BIBLIOGRAPHY

Tyler, G.L., et al., "Voyager 2 Radio Science Observations of the Uranian System: Atmosphere, Rings, and Satellites," SCIENCE, 233, 79-84, 1986.

Simpson, R.A., et al., "Saturn's Rings: Voyager 1 Radio Occultation Experiment Results," IEEE TRANSACTIONS, GE-22, 656-665, 1984.

APPENDIX A
Data Track

The charts which follow provide a table of contents to the archive FND data set. Shown down the left side are tape:file numbers for the tapes in the data set. Middle columns indicate the source of the data -- in terms of time and original tape numbers. The right column gives the corresponding archive data tape at Stanford (not of much interest to the general user).

The first nine tapes contain FND8 data from Canberra -- three tapes each from DSS42 S-band, DSS43 S-band, and DSS43 X-band. The next four tapes contain FND8 data from Parkes (DSS49 at X-band). Tape 14 contains data which have been steered and filtered again (FND8/STEER1/FND8) from Canberra (all three sources). Tape 15 contains FND8/STEER1/FND8 data from Parkes.

The user interested only in ring data (or only in atmospheric data) should note that FND8 data are blocked so that ring and atmospheric data are contained on separate tapes (compare these charts with Appendix B). Note also that, since all tapes contain coherent complex time samples, processing may be started at the beginning of any tape (or file).

Column Headings:

"These Data" refer to the present set of archival tapes; entries are given in tape:file format. Note that file numbers start from zero.

"Nominal Sample Times" denote the approximate time of the first and last sample in each file. The user should obtain the exact times (processing parameter TFIRST; see Appendix D) from the header record in each file. "Start (sec)" is given in seconds from 0 h on 24 January 1986; times in UTC are given with respect to a 24-hour clock. All times are earth receive times.

"Orig Tape Number" gives the corresponding UC- or UL-series tape containing the original data samples.

The final column lists the Stanford archival tape from which these data were derived. APV2UFND is the program which generates FND8 data. APSTEER performs steering. FNDFND is a general filtering and decimation program which, for present purposes, produces the FND8/STEER1/FND8 data. Information in this column will be of interest primarily to Stanford archivists.

General Tape Format:

File 0 of each tape contains a partial copy of this documentation (see Appendix C for format). Some of the material was not available in a format suitable for transfer in this way (graphics, and text produced elsewhere), so could not be included. The user is encouraged to obtain the hard-copy documentation, if that is available. In addition to being more nearly complete, it will have the advantage of being slightly more up-to-date, as late errors will have been detected and corrected.

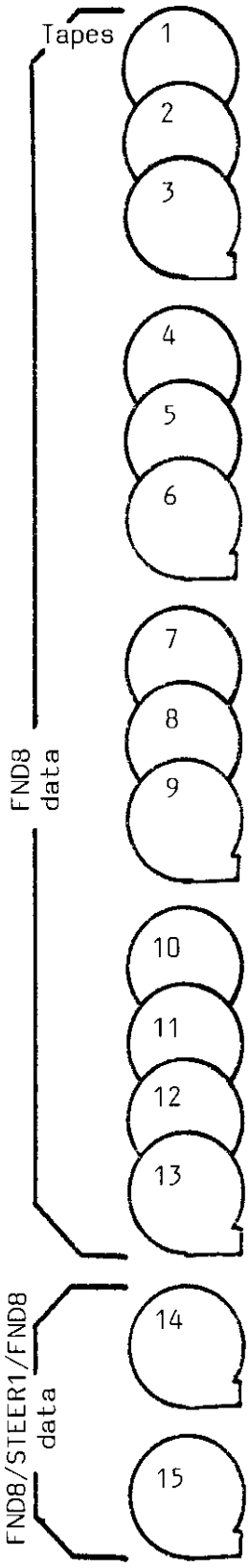

Canberra DSS42 S-band (13 cm wavelength)		17 files each
Canberra DSS43 S-band (13 cm wavelength)		17 files each
Canberra DSS43 X-band (3.6 cm wavelength)		17 files each
Parkes DSS49 X-band (3.6 cm wavelength)		14 files each
Canberra	Files 1- 28 DSS42 S-band 29- 70 DSS43 S-band 71-112 DSS43 X-band	117 files
Parkes DSS49 X-band		49 files

Contents by Tape Number

TYPICAL FILE STRUCTURE

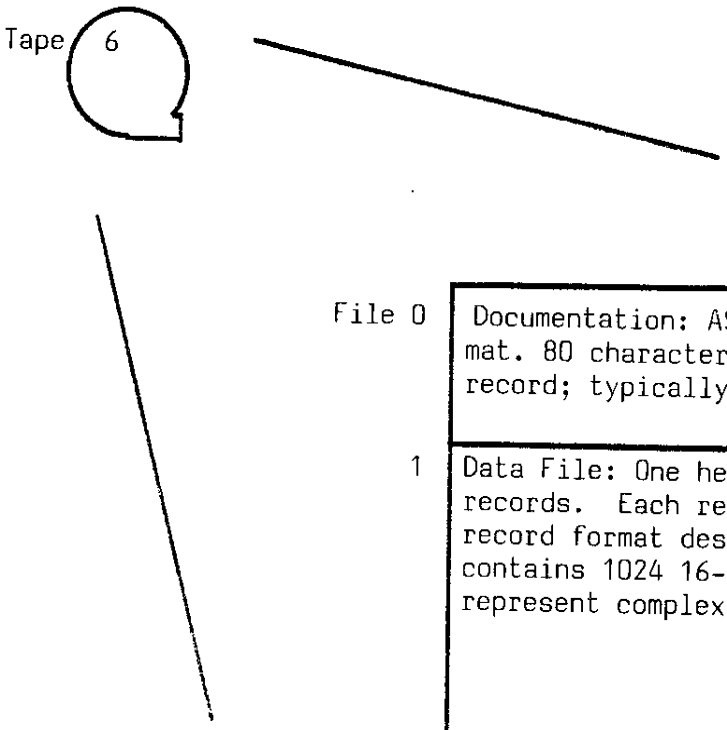

The bulk of the tape will be data files. A data file consists of a header record followed by many data records, each containing complex time samples from either FND8 or FND8/STEER1/FND8 processing. Appendix D describes the header record, while Appendix E covers the data records.

At the end of each tape will be a file of POCA data; on FND8/STEER1/FND8 tapes this will be followed by two files containing steering coefficients. See Appendix F for more information on POCA file format. The steering coefficient files are in card-image format; they are in the same format as the documentation file (see Appendix C).

Formats of character, integer, and floating point numbers are described in Appendix G.

TAPES 1-9: FND8 Data from Canberra

DSS42 S-band data (34-meter antenna; 13 cm wavelength)

These Data (tape:file)	Nominal Sample Times Start (sec)	Start (UTC)	End (UTC)	Orig Tape Number (UC)	APV2UFND Output # (SCRA)
1:0	This documentation file				
:1	76501	21:15:01	21:23:01	0452	0751:0
:2	76981	21:23:01	21:31:01	0453	:1
:3	77461	21:31:01	21:39:01	0454	:2
:4	77941	21:39:01	21:47:01	0455	:3
:5	78421	21:47:01	21:55:01	0456	:4
:6	78901	21:55:01	22:03:01	0457	:5
:7	79381	22:03:01	22:11:01	0458	:6
:8	79861	22:11:01	22:19:01	0459	:7
:9	80341	22:19:01	22:27:01	0460	:8
:10	80821	22:27:01	22:35:01	0461	:9
:11	81301	22:35:01	22:43:01	0462	:10
:12	81781	22:43:01	22:51:02	0463	:11
:13	82262	22:51:02	22:59:02	0464	:12
:14	82742	22:59:02	23:07:02	0465	:13
:15	POCA data				

```
2:0  This documentation file
 :1     83222   23:07:02        23:15:02        0466        0752:0
 :2     83702   23:15:02        23:23:02        0467            :1
 :3     84182   23:23:02        23:31:02        0468            :2
 :4     84662   23:31:02        23:39:02        0469            :3
 :5     85142   23:39:02        23:47:02        0470            :4
 :6     85622   23:47:02        23:55:02        0471            :5
 :7     86102   23:55:02   025:00:03:02         0472            :6
 :8     86582   00:03:02        00:11:02        0473            :7
 :9     87062   00:11:02        00:19:02        0474            :8
 :10    87542   00:19:02        00:27:02        0475            :9
 :11    88022   00:27:02        00:35:02        0476           :10
 :12    88502   00:35:02        00:43:02        0477           :11
 :13    88982   00:43:02        00:51:02        0478           :12
 :14    89462   00:51:02        00:59:02        0479           :13
 :15  POCA data

3:0  This documentation file
 :1     89942   00:59:02        01:07:02        0480           :14
 :2     90422   01:07:02        01:15:02        0481        0753:0
 :3     90902   01:15:02        01:23:03        0482            :1
 :4     91383   01:23:03        01:31:03        0483            :2
 :5     91863   01:31:03        01:39:03        0484            :3
 :6     92343   01:39:03        01:47:03        0485            :4
 :7     92823   01:47:03        01:55:04        0486            :5
 :8     93304   01:55:04        02:03:04        0487            :6
 :9     93784   02:03:04        02:11:04        0488            :7
 :10    94264   02:11:04        02:19:04        0489            :8
 :11    94744   02:19:04        02:27:05        0490            :9
 :12    95225   02:27:05        02:35:05        0491           :10
 :13    95705   02:35:05        02:43:05        0492           :11
 :14    96185   02:43:05        02:51:01        0493           :12
 :15  POCA data
```

DSS43 S-band data (64-meter antenna; 13 cm wavelength)

These Data (tape:file)	Nominal Sample Times Start (sec)	Start (UTC)	End (UTC)	Orig Tape Number (UC)	APV2UFND Output # (SCRA)
4:0	This documentation file				
:1	76501	21:15:01	21:23:01	0452	0794:0
:2	76981	21:23:01	21:31:01	0453	:1
:3	77461	21:31:01	21:39:01	0454	:2
:4	77941	21:39:01	21:47:00	0455	:3
:5	78421	21:47:01	21:55:01	0456	:4
:6	78901	21:55:01	22:03:01	0457	:5
:7	79381	22:03:01	22:11:01	0458	:6
:8	79861	22:11:01	22:19:01	0459	:7
:9	80341	22:19:01	22:27:01	0460	:8
:10	80821	22:27:01	22:35:01	0461	:9
:11	81301	22:35:01	22:43:01	0462	:10
:12	81781	22:43:01	22:51:02	0463	:11
:13	82262	22:51:02	22:59:02	0464	:12
:14	82742	22:59:02	23:07:02	0465	:13
:15	POCA data				
5:0	This documentation file				
:1	83222	23:07:02	23:15:02	0466	0795:0
:2	83702	23:15:02	23:23:02	0467	:1
:3	84182	23:23:02	23:31:02	0468	:2
:4	84662	23:31:02	23:39:02	0469	:3
:5	85142	23:39:02	23:47:02	0470	:4
:6	85622	23:47:02	23:55:02	0471	:5
:7	86102	23:55:02	025:00:03:02	0472	:6
:8	86582	00:03:02	00:11:02	0473	:7
:9	87062	00:11:02	00:19:02	0474	:8
:10	87542	00:19:02	00:27:02	0475	:9
:11	88022	00:27:02	00:35:02	0476	:10
:12	88502	00:35:02	00:43:02	0477	:11
:13	88982	00:43:02	00:51:02	0478	:12
:14	89462	00:51:02	00:59:02	0479	:13
:15	POCA data				

6:0	This documentation file				
:1	89942	00:59:02	01:07:02	0480	:14
:2	90422	01:07:02	01:15:02	0481	0796:0
:3	90902	01:15:02	01:23:03	0482	:1
:4	91383	01:23:03	01:31:03	0483	:2
:5	91863	01:31:03	01:39:03	0484	:3
:6	92343	01:39:03	01:47:03	0485	:4
:7	92823	01:47:03	01:55:04	0486	:5
:8	93304	01:55:04	02:03:04	0487	:6
:9	93784	02:03:04	02:11:04	0488	:7
:10	94264	02:11:04	02:19:04	0489	:8
:11	94744	02:19:04	02:27:05	0490	:9
:12	95225	02:27:05	02:35:05	0491	:10
:13	95705	02:35:05	02:43:05	0492	:11
:14	96185	02:43:05	02:51:01	0493	:12
:15	POCA data				

DSS43 X-band data (64-meter antenna; 3.6 cm wavelength)

These Data (tape:file)	Nominal Sample Times Start (sec)	Start (UTC)	End (UTC)	Orig Tape Number (UC)	APV2UFND Output # (SCRA)
7:0	This documentation file				
:1	76501	21:15:01	21:23:01	0452	0800:0
:2	76981	21:23:01	21:31:01	0453	:1
:3	77461	21:31:01	21:39:01	0454	:2
:4	77941	21:39:01	21:47:01	0455	:3
:5	78421	21:47:01	21:55:01	0456	:4
:6	78901	21:55:01	22:03:01	0457	:5
:7	79381	22:03:01	22:11:01	0458	:6
:8	79861	22:11:01	22:19:01	0459	:7
:9	80341	22:19:01	22:27:01	0460	:8
:10	80821	22:27:01	22:35:01	0461	:9
:11	81301	22:35:01	22:43:01	0462	:10
:12	81781	22:43:01	22:51:02	0463	:11
:13	82262	22:51:02	22:59:02	0464	:12
:14	82742	22:59:02	23:07:02	0465	:13
:15	POCA data				

```
8:0  This documentation file
 :1     83222   23:07:02        23:15:02        0466        0801:0
 :2     83702   23:15:02        23:23:02        0467            :1
 :3     84182   23:23:02        23:31:02        0468            :2
 :4     84662   23:31:02        23:39:02        0469            :3
 :5     85142   23:39:02        23:47:02        0470            :4
 :6     85622   23:47:02        23:55:02        0471            :5
 :7     86102   23:55:02   025:00:03:02         0472            :6
 :8     86582   00:03:02        00:11:02        0473            :7
 :9     87062   00:11:02        00:19:02        0474            :8
:10     87542   00:19:02        00:27:02        0475            :9
:11     88022   00:27:02        00:35:02        0476           :10
:12     88502   00:35:02        00:43:02        0477           :11
:13     88982   00:43:02        00:51:02        0478           :12
:14     89462   00:51:02        00:59:02        0479           :13
:15  POCA data

9:0  This documentation file
 :1     89942   00:59:02        01:07:02        0480           :14
 :2     90422   01:07:02        01:15:02        0481        0802:0
 :3     90902   01:15:02        01:23:03        0482            :1
 :4     91383   01:23:03        01:31:03        0483            :2
 :5     91863   01:31:03        01:39:03        0484            :3
 :6     92343   01:39:03        01:47:03        0485            :4
 :7     92823   01:47:03        01:55:04        0486            :5
 :8     93304   01:55:04        02:03:04        0487            :6
 :9     93784   02:03:04        02:11:04        0488            :7
:10     94264   02:11:04        02:19:04        0489            :8
:11     94744   02:19:04        02:27:05        0490            :9
:12     95225   02:27:05        02:35:05        0491           :10
:13     95705   02:35:05        02:43:05        0492           :11
:14     96185   02:43:05        02:51:01        0493           :12
:15  POCA data
```

TAPES 10-13: FND8 Data from Parkes

These Data (t:f)	Nominal Sample Times Start (sec)	Start (UTC)	End (UTC)	Orig Tape Number (UL)	APV2UFND Output # (SCRA)
10:0	This documentation file				
:1	78101	21:41:41	21:48:21	0308	0786:4
:2	78501	21:48:21	21:55:01	0309	:5
:3	78901	21:55:01	22:01:41	0310	:6
:4	79301	22:01:41	22:08:21	0311	:7
:5	79701	22:08:21	22:15:01	0312	:8
:6	80101	22:15:01	22:21:41	0313	:9
:7	80501	22:21:41	22:28:21	0314	:10
:8	80901	22:28:21	22:35:01	0315	:11
:9	81301	22:35:01	22:41:41	0316	:12
:10	81701	22:41:41	22:48:21	0317	:13
:11	82101	22:48:21	22:55:01	0318	:14
:12	POCA data				
11:0	This documentation file				
:1	82501	22:55:01	23:01:41	0319	0787:0
:2	82901	23:01:41	23:08:21	0320	:1
:3	83301	23:08:21	23:15:01	0321	:2
:4	83701	23:15:01	23:21:41	0322	:3
:5	84101	23:21:41	23:28:21	0323	:4
:6	84501	23:28:21	23:35:01	0324	:5
:7	84901	23:35:01	23:41:41	0325	:6
:8	85314	23:41:54*	23:48:50	0326	:7
:9	85730	23:48:50	23:55:30	0327	:8
:10	86130	23:55:30	025:00:02:10	0328	:9
:11	86530	00:02:10	00:08:50	0329	:10
:12	POCA data				
12:0	This documentation file				
:1	86930	00:08:50	00:15:30	0330	:11
:2	87330	00:15:30	00:22:10	0331	:12
:3	87730	00:22:10	00:28:50	0332	:13
:4	88130	00:28:50	00:35:30	0333	:14
:5	88530	00:35:30	00:42:10	0334	0788:0
:6	88930	00:42:10	00:48:50	0335	:1
:7	89330	00:48:50	00:55:30	0336	:2
:8	89730	00:55:30	01:02:10	0337	:3
:9	90130	01:02:10	01:08:50	0338	:4
:10	90530	01:08:50	01:15:30	0339	:5
:11	90930	01:15:30	01:22:10	0340	:6
:12	POCA data				

13:0	This documentation file				
:1	91330	01:22:10	01:28:50	0341	:7
:2	91730	01:28:50	01:35:30	0342	:8
:3	92130	01:35:30	01:42:10	0343	:9
:4	92530	01:42:10	01:48:50	0344	:10
:5	92930	01:48:50	01:55:30	0345	:11
:6	93330	01:55:30	02:02:10	0346	:12
:7	93730	02:02:10	02:08:50	0347	:13
:8	94130	02:08:50	02:15:30	0348	:14
:9	94530	02:15:30	02:22:10	0349	0789:0
:10	94930	02:22:10	02:28:50	0350	:1
:11	95330	02:28:50	02:35:30	0351	:2
:12	POCA data				

*data loss; equipment malfunction

TAPE 14: FND8/STEER1/FND8 Data from Canberra

Files	Antenna DSS#	Diameter	Band	Wavelength (cm)	Time Period/Events
1-14	42	34	S	13.	Ring ingress
15-28	42	34	S	13.	Ring egress
29-42	43	64	S	13.	Ring ingress
43-56	43	64	S	13.	Atmosphere (empirical steering)
57-70	43	64	S	13.	Ring egress
71-84	43	64	X	3.6	Ring ingress
85-98	43	64	X	3.6	Atmosphere (empirical steering)
99-112	43	64	X	3.6	Ring egress

DSS42 S-band data during the atmospheric occultation phase of the experiment have not been steered and are not included here. File 113 contains a copy of the POCA data file for the full observation period -- that is, 21:15:00 through 02:51:00; its interpretation and format are described in Appendix F. File 114 contains steering coefficients used on data without accounting for Uranus' atmosphere. File 115 contains empirically adjusted steering coefficients for S-band and X-band at DSS43 during the atmospheric occultation period (only).

blank

DSS 42 S-band data (13 cm wavelength; 34-meter antenna)

These Data (tape:file)	Nominal Sample Times Start (sec)	Start (UTC)	End (UTC)	Orig Tape Number (UC)	FNDFND Output Tape
14:0	This documentation file				
:1	76501	21:15:01	21:23:01	0452	SCRA0824:2
:2	76981	21:23:01	21:31:01	0453	:2
:3	77461	21:31:01	21:39:01	0454	:2
:4	77941	21:39:01	21:47:01	0455	:2
:5	78421	21:47:01	21:55:01	0456	:2
:6	78901	21:55:01	22:03:01	0457	:2
:7	79381	22:03:01	22:11:01	0458	:2
:8	79861	22:11:01	22:19:01	0459	:2
:9	80341	22:19:01	22:27:01	0460	:2
:10	80821	22:27:01	22:35:01	0461	:2
:11	81301	22:35:01	22:43:01	0462	:2
:12	81781	22:43:01	22:51:02	0463	:2
:13	82262	22:51:02	22:59:02	0464	:2
:14	82742	22:59:02	23:07:02	0465	:2
:15	89942	00:59:02	01:07:02	0480	:2
:16	90422	01:07:02	01:15:02	0481	:2
:17	90902	01:15:02	01:23:03	0482	:2
:18	91383	01:23:03	01:31:03	0483	:2
:19	91863	01:31:03	01:39:03	0484	:2
:20	92343	01:39:03	01:47:03	0485	:2
:21	92823	01:47:03	01:55:04	0486	:2
:22	93304	01:55:04	02:03:04	0487	:2
:23	93784	02:03:04	02:11:04	0488	:2
:24	94264	02:11:04	02:19:04	0489	:2
:25	94744	02:19:04	02:27:05	0490	:2
:26	95225	02:27:05	02:35:05	0491	:2
:27	95705	02:35:05	02:43:05	0492	:2
:28	96185	02:43:05	02:51:01	0493	:2

DSS 43 S-band data (13 cm wavelength; 64-meter antenna)

These Data (tape:file)	Nominal Sample Times Start (sec)	Start (UTC)	End (UTC)	Orig Tape Number (UC)	FNDFND Output #
:29	76501	21:15:01	21:23:01	0452	SCRA0824:3
:30	76981	21:23:01	21:31:01	0453	:3
:31	77461	21:31:01	21:39:01	0454	:3
:32	77941	21:39:01	21:47:01	0455	:3
:33	78421	21:47:01	21:55:01	0456	:3
:34	78901	21:55:01	22:03:01	0457	:3
:35	79381	22:03:01	22:11:01	0458	:3
:36	79861	22:11:01	22:19:01	0459	:3
:37	80341	22:19:01	22:27:01	0460	:3
:38	80821	22:27:01	22:35:01	0461	:3
:39	81301	22:35:01	22:43:01	0462	:3
:40	81781	22:43:01	22:51:02	0463	:3
:41	82262	22:51:02	22:59:02	0464	:3
:42	82742	22:59:02	23:07:02	0465	:3
:43	83222	23:07:02	23:15:02	0466	DPH.SCRA7981:0
:44	83702	23:15:02	23:23:02	0467	:1
:45	84182	23:23:02	23:31:02	0468	:2
:46	84662	23:31:02	23:39:02	0469	:3
:47	85142	23:39:02	23:47:02	0470	:4
:48	85622	23:47:02	23:55:02	0471	:5
:49	86102	23:55:02	025:00:03:02	0472	:6
:50	86582	00:03:02	00:11:02	0473	:7
:51	87062	00:11:02	00:19:02	0474	:8
:52	87542	00:19:02	00:27:02	0475	:9
:53	88022	00:27:02	00:35:02	0476	:10
:54	88502	00:35:02	00:43:02	0477	:11
:55	88982	00:43:02	00:51:02	0478	:12
:56	89462	00:51:02	00:59:02	0479	:13
:57	89942	00:59:02	01:07:02	0480	SCRA0824:3
:58	90422	01:07:02	01:15:02	0481	:3
:59	90902	01:15:02	01:23:03	0482	:3
:60	91383	01:23:03	01:31:03	0483	:3
:61	91863	01:31:03	01:39:03	0484	:3
:62	92343	01:39:03	01:47:03	0485	:3
:63	92823	01:47:03	01:55:04	0486	:3
:64	93304	01:55:04	02:03:04	0487	:3
:65	93784	02:03:04	02:11:04	0488	:3
:66	94264	02:11:04	02:19:04	0489	:3
:67	94744	02:19:04	02:27:05	0490	:3
:68	95225	02:27:05	02:35:05	0491	:3
:69	95705	02:35:05	02:43:05	0492	:3
:70	96185	02:43:05	02:51:01	0493	:3

DSS 43 X-band data (3.6 cm wavelength; 64-meter antenna)

These Data (tape:file)	Nominal Sample Times Start (sec)	Start (UTC)	End (UTC)	Orig Tape Number (UC)	FNDFND Output #
:71	76501	21:15:01	21:23:01	0452	SCRA0824:0
:72	76981	21:23:01	21:31:01	0453	:0
:73	77461	21:31:01	21:39:01	0454	:0
:74	77941	21:39:01	21:47:01	0455	:0
:75	78421	21:47:01	21:55:01	0456	:0
:76	78901	21:55:01	22:03:01	0457	:0
:77	79381	22:03:01	22:11:01	0458	:0
:78	79861	22:11:01	22:19:01	0459	:0
:79	80341	22:19:01	22:27:01	0460	:0
:80	80821	22:27:01	22:35:01	0461	:0
:81	81301	22:35:01	22:43:01	0462	:0
:82	81781	22:43:01	22:51:02	0463	:0
:83	82262	22:51:02	22:59:02	0464	:0
:84	82742	22:59:02	23:07:02	0465	:0
:85	83222	23:07:02	23:15:02	0466	DPH.SCRA8041:0
:86	83702	23:15:02	23:23:02	0467	:1
:87	84182	23:23:02	23:31:02	0468	:2
:88	84662	23:31:02	23:39:02	0469	:3
:89	85142	23:39:02	23:47:02	0470	:4
:90	85622	23:47:02	23:55:02	0471	:5
:91	86102	23:55:02	025:00:03:02	0472	:6
:92	86582	00:03:02	00:11:02	0473	:7
:93	87062	00:11:02	00:19:02	0474	:8
:94	87542	00:19:02	00:27:02	0475	:9
:95	88022	00:27:02	00:35:02	0476	:10
:96	88502	00:35:02	00:43:02	0477	:11
:97	88982	00:43:02	00:51:02	0478	:12
:98	89462	00:51:02	00:59:02	0479	:13
:99	89942	00:59:02	01:07:02	0480	SCRA0824:0
:100	90422	01:07:02	01:15:02	0481	:0
:101	90902	01:15:02	01:23:03	0482	:0
:102	91383	01:23:03	01:31:03	0483	:0
:103	91863	01:31:03	01:39:03	0484	:0
:104	92343	01:39:03	01:47:03	0485	:0
:105	92823	01:47:03	01:55:04	0486	:0
:106	93304	01:55:04	02:03:04	0487	:0
:107	93784	02:03:04	02:11:04	0488	:0
:108	94264	02:11:04	02:19:04	0489	:0
:109	94744	02:19:04	02:27:05	0490	:0
:110	95225	02:27:05	02:35:05	0491	:0
:111	95705	02:35:05	02:43:05	0492	:0
:112	96185	02:43:05	02:51:01	0493	:0

:113 POCA data
:114 STEER1 coefficients (neglecting atmosphere)
:115 STEER1 coefficients (empirically adjusted for atmosphere)

TAPE 15: FND8/STEER1/FND8 Data from Parkes

These Data (tape:file)	Nominal Sample Times Start (sec)	Start (UTC)	End (UTC)	Orig Tape Number (UL)	FNDFND Output #
15:0	This documentation file				
:1	78101	21:41:41	21:48:21	0308	SCRA 0825:0
:2	78501	21:48:21	21:55:01	0309	:0
:3	78901	21:55:01	22:01:41	0310	:0
:4	79301	22:01:41	22:08:21	0311	:0
:5	79701	22:08:21	22:15:01	0312	:0
:6	80101	22:15:01	22:21:41	0313	:0
:7	80501	22:21:41	22:28:21	0314	:0
:8	80901	22:28:21	22:35:01	0315	:0
:9	81301	22:35:01	22:41:41	0316	:0
:10	81701	22:41:41	22:48:21	0317	:0
:11	82101	22:48:21	22:55:01	0318	:0
:12	82501	22:55:01	23:01:41	0319	:0
:13	82901	23:01:41	23:08:21	0320	DPH.SCRA7871:0
:14	83301	23:08:21	23:15:01	0321	:1
:15	83701	23:15:01	23:21:41	0322	:2
:16	84101	23:21:41	23:28:21	0323	:3
:17	84501	23:28:21	23:35:01	0324	:4
:18	84901	23:35:01	23:41:41	0325	:5
:19	85314	23:41:54*	23:48:50	0326	:6
:20	85730	23:48:50	23:55:30	0327	:7
:21	86130	23:55:30	025:00:02:10	0328	:8
:22	86530	00:02:10	00:08:50	0329	:9
:23	86930	00:08:50	00:15:30	0330	:10
:24	87330	00:15:30	00:22:10	0331	:11
:25	87730	00:22:10	00:28:50	0332	:12
:26	88130	00:28:50	00:35:30	0333	:13
:27	88530	00:35:30	00:42:10	0334	:14
:28	88930	00:42:10	00:48:50	0335	:15
:29	89330	00:48:50	00:55:30	0336	:16
:30	89730	00:55:30	01:02:10	0337	:17
:31	90130	01:02:10	01:08:50	0338	SCRA 0825:0
:32	90530	01:08:50	01:15:30	0339	:0
:33	90930	01:15:30	01:22:10	0340	:0
:34	91330	01:22:10	01:28:50	0341	:0
:35	91730	01:28:50	01:35:30	0342	:0
:36	92130	01:35:30	01:42:10	0343	:0
:37	92530	01:42:10	01:48:50	0344	:0
:38	92930	01:48:50	01:55:30	0345	:0
:39	93330	01:55:30	02:02:10	0346	:0
:40	93730	02:02:10	02:08:50	0347	:0
:41	94130	02:08:50	02:15:30	0348	:0
:42	94530	02:15:30	02:22:10	0349	:0
:43	94930	02:22:10	02:28:50	0350	:0
:44	95330	02:28:50	02:35:30	0351	:0

:45 POCA data
:46 STEER1 coefficients (neglecting atmosphere)
:47 STEER1 coefficients (empirically adjusted for atmosphere)

* data loss; equipment malfunction

APPENDIX B
Significant Events

The chart below shows significant events for Radio Science in the Voyager Uranus encounter timeline. Times are earth receive time (UTC). Pre-midnight times are 24 January 1986; post-midnight times are 25 January 1986.

21:45:39	Telemetry modulation off
21:52:00	Begin mini-ASCAL
22:04:00	End mini-ASCAL
22:28:30	Epsilon-ring occultation
22:46:41	6-ring occultation
22:55	X-band transmitter to low power
22:56:02	S-band transmitter to high power
23:17	Ingress occultation by ionosphere
23:21	Ingress occultation by atmosphere
23:38	Ingress occultation by cloud layer
23:44	End major cloud layer effects
00:19	Begin major cloud layer effects (egress occultation)
00:28	End major cloud layer effects
00:44	Exit occultation by atmosphere
01:03:14	S-band transmitter to low power
01:04:00	X-band transmitter to high power
01:18:23	6-ring occultation
01:37:40	Epsilon-ring occultation
02:16:36	Begin mini-ASCAL
02:27:16	End mini-ASCAL
02:32:04	Telemetry modulation on

APPENDIX C
Documentation File

This documentation is reproduced as a text file in file 0 of each archival data tape. The text is packed as 80-character card images in physical records that are 8000 bytes long (that is, 100 card images per physical record). Characters are coded according to ASCII conventions. The documentation file will require about 20 physical records.

The files of steering coefficients (FND8/STEER1/FND8 tapes only) are stored in card-image format in the same way as the documentation except that each "card" holds 120 characters and each physical record contains 12000 bytes.

NB: Although the documentation included in file 0 provides the basic information needed to use and understand the data on the tape, more complete documentation will be provided NSSDC in hard-copy form. The user is encouraged to use the hard-copy data, if that is available.

APPENDIX D
Header Record

Each data file comprises one header record followed by many data records. All records have length IRECL, which for present purposes is 2048 bytes. Data identification and processing parameters are defined as below.

Byte count starts from 0 in each record. "Parameter" is the mnemonic which appears in the processing program(s). "Data type" may be

C*n	Character	ASCII representation
I*n	Integer	Fixed-point representation
R*n	Real	Floating-point representation

Number of 8-bit bytes is appended to the data type. Hence, R*8 denotes 64-bit floating point numbers (double precision) and C*16 denotes a 128-bit character string (16 ASCII characters). Bit assignments for integer and real numbers are explained in Appendix G.

Bytes	Parameter	Data Type	Explanation
0- 11	DATE_EXP(3)	I*4	Experiment date (1986, 01, 24)
12- 27	OTAPE	C*16	Name of original tape (UC-, UL-series)
28- 31	DSS	I*4	Antenna (Canberra = 42 or 43) (Parkes = 49)
32- 35	FREQBD	C*4	Frequency band ('S' or 'X')
36- 39	POLN	C*4	Polarization ('R' for RCP)
40- 47	FTX	R*8	Nominal transmit frequency (8420430461.667 Hz at X-band)
48- 63	PROGRAM	C*16	Program which produced present data
64- 79	VERSION	C*16	Version of that program
80- 91	DATE_PROG(3)	I*4	Date program was executed (yr, mon, dy)
92-103	TIME_PROG(3)	I*4	Time program was executed (hr, min, sc)
104-111	TREF	R*8	Reference time for processing (secs)
112-119	TFIRST	R*8	Time of first data sample in file (sec)
120-127	TLREC	R*8	Time of first sample in last record in file (sec)
128-135	DELT	R*8	Sample spacing (sec)
136-143	ASCALE	R*8	Scale factor (multiply values in file) to recover true amplitude (relative to original data samples).
144-151	FFREQ	R*8	First frequency in passband represented by data values in file (not valid after steering)
152-159	LFREQ	R*8	Last frequency in passband (not valid)
160-163	DECR	I*4	Decimation ratio from original data
164-167	NFBIN	I*4	Number of first frequency bin retained in previous digital filtering step
168-171	IRECL	I*4	Record length (bytes)
172-175	NBITS	I*4	Number of bits per complex data sample
176-255	COMMENT	C*80	Comment entered by operator (optional)
256-2047			not used

HEADER RECORD FORMAT

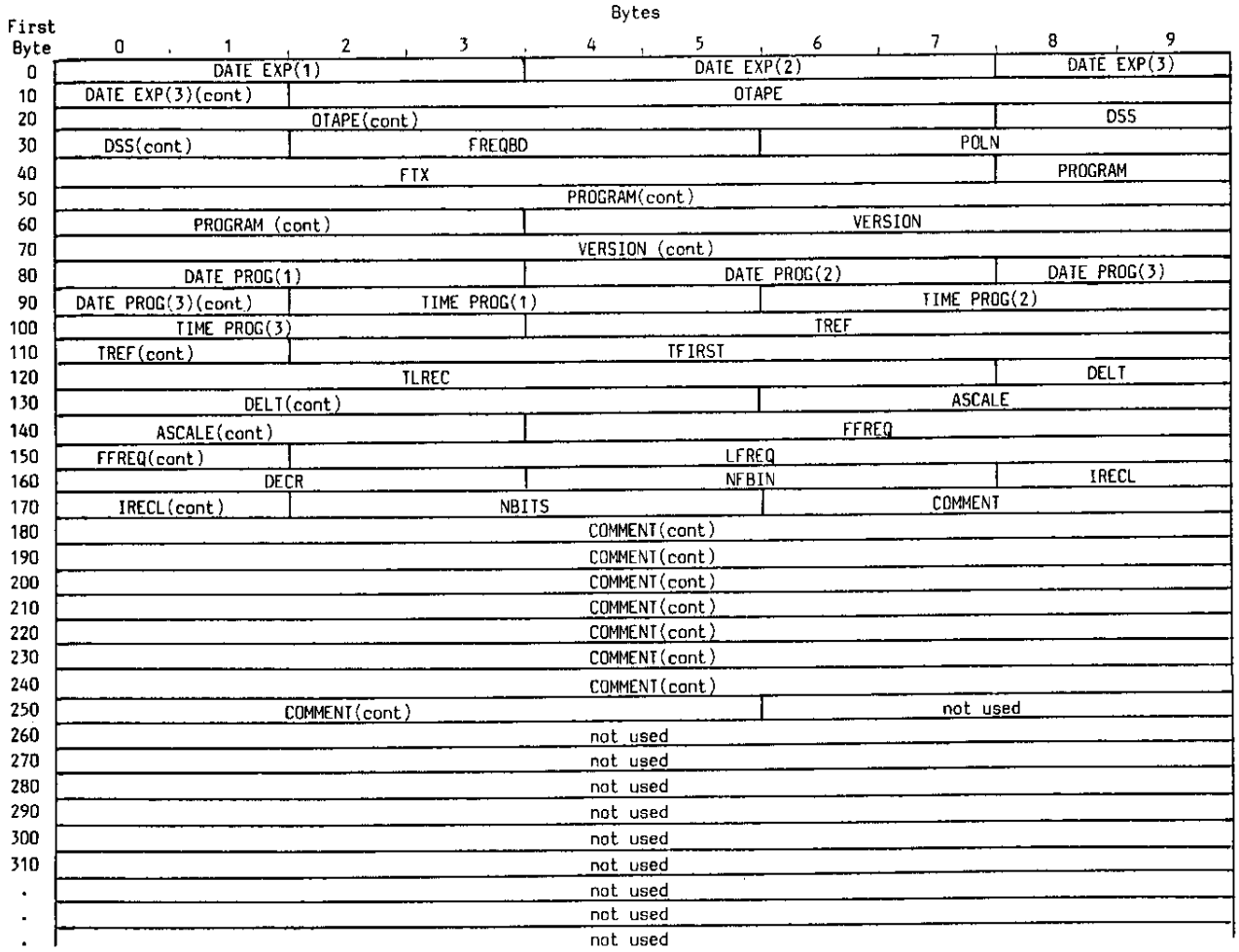

Single header record precedes data records in each data file

PROGRAM VUFND←2←NSSDC

COPIES VOYAGER URANUS FND DATA FROM DISK TO TAPE FOR NSSDC

INPUT FILE :UDD:D240←RS←X:UC0452.42SR
FROM PROGRAM APV2UFND.PR
VERSION APV2U 1.02, 2/86
EXECUTED 1986/ 4/17 13:46: 9

OUTPUT FILE HEADER CONTAINS FOLLOWING INFORMATION:

EXPERIMENT DATE	1986/ 1/24
ORIGINAL TAPE	UC0452
DATA CHANNEL	42 S R
TRANSMIT FREQUENCY	2296481035.000
PROGRAM NAME	APV2UFND.PR
VERSION	APV2U 1.02, 2/86
EXECUTED ON	1986/ 4/17 13:46: 9
REFERENCE TIME	.005120
TIME OF FIRST SAMPLE IN FIRST RECORD	76501.160960
FIRST SAMPLE IN LAST RECORD	76980.884480
SAMPLE SPACING	.000320
AMPLITUDE SCALE FACTOR	3.906E-03
FIRST FREQUENCY	10644.531250
LAST FREQUENCY	13769.531250
DECIMATION RATIO	8
FIRST BIN NUMBER	219
RECORD LENGTH (BYTES)	2048
BITS PER COMPLEX SAMPLE	32

COMMENT:
THIS IS THE ARRAY PLUS VERSION OF V2UFND, OUTPUT IS FIXED POINT COMPLEX

NUMBER OF RECORDS (INCLUDING HEADER) PROCESSED = 2930

Header record data from Tape 1, File 1

PROGRAM VUFND←2←NSSDC
COPIES VOYAGER URANUS FND DATA FROM DISK TO TAPE FOR NSSDC

INPUT FILE :UDD:D240←RS←X:UL0308.49XR
FROM PROGRAM APPSEPFND.PR
VERSION APPREP 1.11, 7/8
EXECUTED 1986/ 7/ 8 13: 5:40

OUTPUT FILE HEADER CONTAINS FOLLOWING INFORMATION:

EXPERIMENT DATE	1986/ 1/24
ORIGINAL TAPE	UL0308
DATA CHANNEL	49 X R
TRANSMIT FREQUENCY	8420430461.667
PROGRAM NAME	APPREPFND.PR
VERSION	APPREP 1.11, 7/8
EXECUTED ON	1986/ 7/ 8 13: 5:40
REFERENCE TIME	.003200
TIME OF FIRST SAMPLE IN FIRST RECORD	78101.097600
FIRST SAMPLE IN LAST RECORD	78500.969600
SAMPLE SPACING	.000200
AMPLITUDE SCALE FACTOR	3.906E-03
FIRST FREQUENCY	20937.500000
LAST FREQUENCY	25937.500000
DECIMATION RATIO	8
FIRST BIN NUMBER	269
RECORD LENGTH (BYTES)	2048
BITS PER COMPLEX SAMPLE	32

COMMENT:
ARRAY PLUS BLOCK I/O VERSION OF V2UFND, OUTPUT IS FIXED POINT COMPLEX

NUMBER OF RECORDS (INCLUDING HEADER) PROCESSED = 3907

Header record data from Tape 10, File 1

APPENDIX E
Data Records

Each data file on an archive data tape begins with a header record (Appendix D). All remaining records are data records. All records have length IRECL=2048 bytes.

Each data record contains 1024 16-bit integers (I*2; see Appendix G for format). Pairs of integers comprise complex samples of signal voltage, uniformly spaced in time (DELT in the header gives the spacing; see Appendix D). There are thus 512 complex time samples per record, with the real and imaginary parts of each sample occupying 2 successive bytes.

Data samples are continuous across record boundaries; data are continuous across file boundaries except where

1) steering switches between deterministic and empirical (FND8/STEER1/FND8 data only)
2) 30 seconds of Parkes data were lost in a malfunction (23:42)

APPENDIX F
POCA File

The computer-driven local oscillator (POCA) at Canberra provided a time varying signal at about 43 MHz (46 MHz at Parkes). This was multiplied and mixed so that the spacecraft signal would appear near the center of a 25 kHz (40 kHz at Parkes) baseband spectrum. Instantaneous POCA frequency and frequency rate-of-change were recorded on data tapes at integral seconds (note that only linear changes in frequency with time were permitted). See separate documentation by D.L. Gresh for more information on interpretation and use of POCA values.

See Appendix A for the file which contains a packed version of these POCA values. Each tape contains POCA data for the full observation period (21:15 - 02:51).

The POCA file is made up of 24224-byte records. Each record begins with a 224-byte header; the remaining 24000 bytes contain times, POCA frequencies, and POCA frequency rates of change.

Assignments in the POCA record header are as follows

Bytes	Parameter	Data Type	Explanation
0- 27	TITLE	C*28	Title
28- 39	EXP_DATE(3)	I*4	Experiment date (1986, 01, 24)
40- 55			not used
56- 71	TAPE_NAME	C*16	Original tape name (UC-, UL-series)
72- 83			not used
84-111	PROGRAM	C*28	Source program name
112-139	VERSION	C*28	Version of source program
140-151	DATE_RUN(3)	I*4	File creation date (yr, mon, day)
152-167			not used
168-179	TIME_RUN(3)	I*4	File creation time (hr, min, sec)
180-195			not used
196-199	TMAX	R*4	Seconds in full file (172800. sec)
200-223			not used

Most entries in the POCA header will not be of value to the general user; they simply provide documentation on when and how the POCA file was created. Note that TMAX=2*86400; using a 48-hour day simplified bookkeeping operations in certain Stanford programs since the observations involved a midnight crossing.

The remaining 24000 bytes of each POCA record contain data values. The assignments were as follows:

224-231	TIME_1	R*8	Time of POCA readings
232-239	FREQUENCY_1	R*8	POCA frequency at TIME_1
240-247	RATE_1	R*8	POCA rate at TIME_1
248-255	TIME_2	R*8	Time of next POCA readings
256-263	FREQUENCY_2	R*8	POCA frequency at TIME_2
264-271	RATE_2	R*8	POCA rate at TIME_2
272-279	TIME_3	R*8	Time of next POCA readings
...	...	...	...

APPENDIX G
Data Formats

Archive tapes were generated on a Data General MV/10000 computer using Data General conventions for representing character, integer, and floating point numbers. These are explained below

Character data are represented using 8-bit bytes per character. Characters are coded using conventional ASCII assignments.

Fixed point data are two's complement binary numbers in either 16-bit (I*2) or 32-bit (I*4) format. The range of the two types is -32768 to +32767 and -2,147,483,648 to +2,147,483,647, respectively. Integer numbers consist of a sign bit S (bit 0) and a value V (bits 1-15 or bits 1-31).

The sign bit S is zero for positive numbers, one for negative.

The value bits V are the two's complement of the corresponding positive number if S=1.

Floating point data are normalized, sign magnitude numbers. Floating point numbers consist of a sign bit S (bit 0), an exponent X (bits 1-7), and a mantissa M. For single precision numbers (R*4) the mantissa includes bits 8-31; for double precision (R*8) the mantissa includes bits 8-63. If the mantissa is zero, the sign bit and exponent should also be zero (true zero). Floating point numbers lie within the magnitude range 5.4 10**-78 to 7.2 10**75.

The sign bit S is zero for positive numbers, one for negative.

The exponent X is an unsigned 7-bit integer in excess 64 representation. That is, X is 64 larger than the true value of the exponent. X is applied to the base 16.

The mantissa is a binary fraction. For single precision it lies in the range (1/16) to (1-2**-24); for double precision it lies in the range (1/16) to (1-2**-56).

Floating point numbers can be reconstructed by calculating

$$[-1]^{**}S * [16^{**}(X-64)] * M$$

Examples:

Hexadecimal 4512 AD50 = decimal 76501.00
Hexadecimal 472B AB11 8BE6 516E = decimal 45789462.440930

16-bit Fixed-Point Two's Complement Format

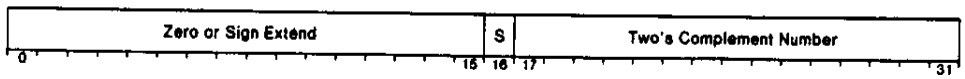

32-bit Fixed-Point Two's Complement Format

Single Precision Format

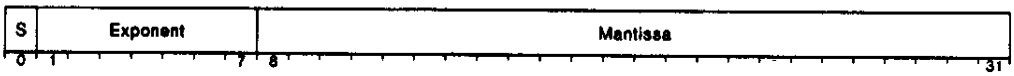

Single Precision Format

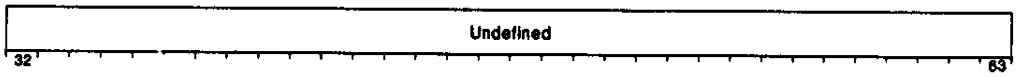

Double Precision Format (First Half)

Double Precision Format (Second Half)

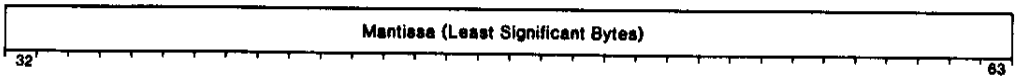

APPENDIX H

Gain Correction for Spacecraft Antenna Mispointing

The following FORTRAN77 subprogram may be used to estimate signal level degradation resulting from mispointing of the Voyager 2 spacecraft high gain antenna during the Uranus radio occultation period.

```
      function v2u_sc_gain (dpsecs, band)

c Function returns normalized spacecraft antenna gain during Voyager 2 Uranus
c  encounter.  Assumes propagation path is light-time corrected geometric line
c  of site (that is, it does not account for refraction by atmosphere).

c Gain returned is linear.  Model is not expected to be accurate in detail
c  below 0.001.  Calculated gains below 0.00001 are returned as 0.00001.
c  Pointing reconstruction is from JPL-supplied tape  UH0003;  CRS (ephemeris)
c  data are from JPL-supplied tape  UK0015;  antenna model is from Stanford
c   subroutine  BEAM.

c Input  dpsecs  is double precision earth receive time in seconds from
c  0h on 24 Jan 86 UTC.  Valid range is
c      from              21:45:00 on 24 Jan 1986    (dpsecs = 78300.)
c      to                02:45:00 on 25 Jan 1986    (dpsecs = 96300.)
c  If  dpsecs  is outside these ranges, the function returns  1.0E-10.

c Input  band  should be either  'S'  or  's'  for S-band
c                                'X'  or  'x'  for X-band

c General notes on X-band pointing:
c   1. Average gain appears down by about 1 dB at post-occultation mini-ascal
c   2. Gain fluctuations are on the order of  +/-0.1 dB  before atmospheric
c      occultation and +/-0.3 dB  after
c   3. Fluctuation periods are 5-10 minutes before, 20-30 minutes after
c   4. Maximum gain rate-of-change appears to be about 0.003 dB/sec over
c      periods up to 1-2 minutes.

c Program note:  arrays  and  arrayx  contain reconstructed gain at 10 second
c  intervals starting at  21:45:00 UTC on 24 Jan 86.  Values were obtained
c  using program  SC_HGA.  This routine linearly interpolates among them.

c RAS - 31 Dec 86

      parameter             (tstart = 78300.)
      parameter             (tstop  = 96300.)
      parameter             (dt     = 10.)

      parameter             (npoints = (tstop - tstart)/dt + 1)

      double precision      dpsecs
      character*1           band
```

```
   real                        arrays (npoints)
5   /   .99984,  .99984,  .99984,  .99984,  .99984,  .99984,
6       .99984,  .99984,  .99984,  .99984,  .99984,  .99984,
7       .99984,  .99984, 1.00000, 1.00000, 1.00000, 1.00000,
8      1.00000, 1.00000, 1.00000, 1.00000, 1.00000, 1.00000,
9      1.00000, 1.00000, 1.00000, 1.00000, 1.00000, 1.00000,
*      1.00000, 1.00000, 1.00000, 1.00000, 1.00000, 1.00000,
1      1.00000, 1.00000, 1.00000, 1.00000, 1.00000, 1.00000,
2      1.00000, 1.00000,  .99984,  .99935,  .99757,  .99449,
3       .99013,  .98451,  .97795,  .97461,  .96779,  .97604,
4       .98307,  .98917,  .99417,  .99773,  .99968,  .99968,
5       .99821,  .99498,  .98981,  .98307,  .97859,  .97397,
6       .96858,  .96290,  .96589,  .96242,  .96985,  .97811,
7       .98467,  .98997,  .99417,  .99724,  .99903,  .99951,
8       .99935,  .99935,  .99951,  .99951,  .99903,  .99838,
9       .99579,  .99223,  .98756,  .98211,  .97588,  .96842,
*       .96069,  .96290,  .97111,  .98035,  .98804,  .99384,
1       .99740,  .99854,  .99789,  .99595,  .99304,  .98949,
2       .98467,  .97939,  .97302,  .96542,  .95849,  .96494,
3       .97286,  .98387,  .99062,  .99530,  .99838,  .99968,
4       .99903,  .99870,  .99870,  .99870,  .99870,  .99870,
5       .99984,  .99984,  .99984,  .99968,  .99951,  .99968,
6       .99968,  .99968,  .99968,  .99984,  .99984,  .99984,
7       .99984,  .99984,  .99984,  .99968,  .99968,  .99968,
8       .99968,  .99968,  .99968,  .99984,  .99984, 1.00000,
9      1.00000, 1.00000, 1.00000, 1.00000, 1.00000,  .99984,
*       .99984,  .99984,  .99968,  .99951,  .99951,  .99935,
1       .99903,  .99886,  .99854,  .99821,  .99805,  .99789,
2       .99805,  .99805,  .99805,  .99821,  .99821,  .99838,
3       .99838,  .99838,  .99854,  .99854,  .99854,  .99854,
4       .99854,  .99854,  .99854,  .99854,  .99870,  .99854,
5       .99854,  .99854,  .99854,  .99838,  .99854,  .99838,
6       .99838,  .99821,  .99821,  .99821,  .99821,  .99821,
7       .99821,  .99821,  .99821,  .99821,  .99821,  .99838,
8       .99838,  .99838,  .99838,  .99838,  .99838,  .99854,
9       .99870,  .99870,  .99886,  .99886,  .99903,  .99903,
*       .99903,  .99903,  .99903,  .99903,  .99903,  .99886,
1       .99870,  .99854,  .99854,  .99838,  .99821,  .99805,
2       .99789,  .99821,  .99854,  .99886,  .99903,  .99919,
3       .99935,  .99951,  .99968,  .99968,  .99984,  .99984,
4       .99984,  .99984,  .99968,  .99968,  .99968,  .99984,
5       .99984,  .99984, 1.00000, 1.00000, 1.00000, 1.00000,
6       .99984,  .99984,  .99968,  .99968,  .99951,  .99935,
7       .99919,  .99886,  .99870,  .99838,  .99821,  .99805,
8       .99773,  .99789,  .99821,  .99854,  .99886,  .99903,
9       .99919,  .99935,  .99951,  .99968,  .99968,  .99984,
*       .99984,  .99984,  .99984,  .99984,  .99984,  .99984,
1       .99984, 1.00000,  .99984,  .99984,  .99984,  .99984,
2       .99968,  .99951,  .99935,  .99903,  .99870,  .99821,
3       .99789,  .99773,  .99821,  .99838,  .99838,  .99919,
4       .99968,  .99968,  .99984,  .99984,  .99984,  .99984,
5       .99984,  .99984,  .99984,  .99984,  .99984,  .99984,
6       .99984,  .99968,  .99968,  .99968,  .99968,  .99968,
7       .99968,  .99968,  .99968,  .99984,  .99984,  .99984,
```

```
8       .99968,  .99968,  .99968,  .99968,  .99968,  .99968,
9       .99968,  .99968,  .99968,  .99951,  .99951,  .99951,
*       .99951,  .99935,  .99935,  .99919,  .99919,  .99903,
1       .99903,  .99886,  .99886,  .99870,  .99854,  .99854,
2       .99838,  .99821,  .99805,  .99789,  .99773,  .99757,
3       .99740,  .99740,  .99724,  .99724,  .99740,  .99757,
4       .99789,  .99805,  .99821,  .99854,  .99854,  .99886,
5       .99903,  .99903,  .99919,  .99935,  .99935,  .99935,
6       .99935,  .99951,  .99951,  .99951,  .99951,  .99951,
7       .99951,  .99951,  .99935,  .99951,  .99951,  .99951,
8       .99951,  .99951,  .99951,  .99951,  .99951,  .99951,
9       .99951,  .99951,  .99935,  .99935,  .99935,  .99935,
*       .99919,  .99919,  .99903,  .99903,  .99886,  .99886,
1       .99870,  .99870,  .99838,  .99838,  .99821,  .99805,
2       .99789,  .99773,  .99757,  .99740,  .99724,  .99708,
3       .99692,  .99676,  .99676,  .99692,  .99708,  .99740,
4       .99757,  .99773,  .99805,  .99821,  .99838,  .99854,
5       .99870,  .99886,  .99903,  .99903,  .99919,  .99919,
6       .99919,  .99935,  .99935,  .99935,  .99935,  .99935,
7       .99935,  .99919,  .99919,  .99919,  .99919,  .99935,
8       .99935,  .99935,  .99919,  .99919,  .99919,  .99903,
9       .99886,  .99870,  .99838,  .99805,  .99789,  .99740,
*       .99708,  .99676,  .99643,  .99643,  .99659,  .99659,
1       .99659,  .99659,  .99676,  .99676,  .99676,  .99676,
2       .99692,  .99692,  .99692,  .99692,  .99692,  .99692,
3       .99708,  .99708,  .99708,  .99708,  .99708,  .99708,
4       .99724,  .99724,  .99724,  .99724,  .99724,  .99724,
5       .99740,  .99740,  .99724,  .99724,  .99740,  .99740,
6       .99740,  .99740,  .99757,  .99757,  .99757,  .99757,
7       .99757,  .99757,  .99773,  .99773,  .99773,  .99773,
8       .99789,  .99789,  .99789,  .99789,  .99789,  .99789,
9       .99805,  .99805,  .99805,  .99805,  .99805,  .99805,
*       .99789,  .99821,  .99805,  .99805,  .99821,  .99821,
1       .99805,  .99805,  .99821,  .99821,  .99821,  .99821,
2       .99821,  .99821,  .99821,  .99821,  .99821,  .99821,
3       .99838,  .99838,  .99838,  .99838,  .99838,  .99838,
4       .99838,  .99838,  .99838,  .99821,  .99821,  .99821,
5       .99821,  .99805,  .99805,  .99805,  .99789,  .99789,
6       .99789,  .99789,  .99773,  .99773,  .99773,  .99757,
7       .99757,  .99757,  .99757,  .99740,  .99740,  .99740,
8       .99724,  .99724,  .99724,  .99740,  .99740,  .99740,
9       .99724,  .99724,  .99724,  .99724,  .99724,  .99708,
*       .99724,  .99724,  .99724,  .99724,  .99740,  .99740,
1       .99724,  .99708,  .99724,  .99773,  .99854,  .99903,
2       .99935,  .99919,  .99870,  .99757,  .99627,  .99433,
3       .99223,  .98949,  .98660,  .98323,  .97939,  .97524,
4       .97080,  .96589,  .96069,  .95489,  .94896,  .94244,
5       .93565,  .92829,  .92127,  .91340,  .90573,  .89811,
6       .88877,  .87965,  .87046,  .86107,  .85175,  .84167,
7       .83155,  .82152,  .81049,  .79918,  .78799,  .77654,
8       .76521,  .75389,  .74169,  .72977,  .71750,  .70528,
9       .69287,  .68039,  .66715,  .65447,  .64130,  .62857,
*       .61637,  .60252,  .58871,  .57578,  .56226,  .54929,
1       .53696,  .52476,  .51249,  .50138,  .49010,  .47912,
```

```
2        .46797,  .45739,  .44580,  .43386,  .42357,  .41259,
3        .40192,  .39093,  .37981,  .36937,  .35975,  .34996,
4        .33951,  .33272,  .32637,  .32083,  .31518,  .30808,
5        .30167,  .29512,  .28983,  .28485,  .27900,  .27279,
6        .26725,  .26163,  .25573,  .24961,  .24434,  .23942,
7        .23360,  .22775,  .22197,  .21606,  .21051,  .20517,
8        .20047,  .19502,  .18882,  .18354,  .17878,  .17332,
9        .16806,  .16205,  .15598,  .14999,  .14386,  .13729,
*        .13158,  .12602,  .12076,  .11621,  .11139,  .10637,
1        .10217,  .09815,  .09348,  .08948,  .08581,  .08216,
2        .07838,  .07429,  .06945,  .06524,  .06122,  .05747,
3        .05314,  .04974,  .04679,  .04411,  .04119,  .03872,
4        .03646,  .03415,  .03189,  .02974,  .02763,  .02577,
5        .02417,  .02256,  .02121,  .02025,  .01922,  .01818,
6        .01721,  .01663,  .01624,  .01587,  .01564,  .01508,
7        .01470,  .01425,  .01389,  .01338,  .01308,  .01277,
8        .01240,  .01203,  .01180,  .01144,  .01115,  .01079,
9        .01026,  .00979,  .00930,  .00885,  .00844,  .00808,
*        .00760,  .00724,  .00673,  .00623,  .00576,  .00528,
1        .00482,  .00442,  .00402,  .00364,  .00329,  .00297,
2        .00267,  .00238,  .00207,  .00182,  .00160,  .00141,
3        .00123,  .00106,  .00082,  .00066,  .00059,  .00054,
4        .00042,  .00034,  .00026,  .00020,  .00017,  .00017,
5        .00018,  .00019,  .00021,  .00021,  .00022,  .00023,
6        .00023,  .00024,  .00024,  .00025,  .00025,  .00025,
7        .00026,  .00027,  .00028,  .00028,  .00029,  .00030,
8        .00032,  .00032,  .00032,  .00031,  .00029,  .00027,
9        .00026,  .00023,  .00020,  .00019,  .00017,  .00015,
*        .00014,  .00013,  .00011,  .00010,  .00009,  .00008,
1        .00006,  .00006,  .00005,  .00004,  .00003,  .00003,
2        .00002,  .00002,  .00001,  .00001,  .00001,  .00001,
3        .00001,  .00001,  .00001,  .00001,  .00001,  .00001,
4        .00001,  .00002,  .00003,  .00004,  .00006,  .00008,
5        .00010,  .00012,  .00015,  .00018,  .00021,  .00024,
6        .00028,  .00032,  .00036,  .00040,  .00043,  .00048,
7        .00055,  .00061,  .00068,  .00076,  .00086,  .00094,
8        .00102,  .00114,  .00125,  .00136,  .00148,  .00163,
9        .00173,  .00179,  .00188,  .00197,  .00207,  .00215,
*        .00213,  .00207,  .00198,  .00187,  .00174,  .00158,
1        .00147,  .00134,  .00122,  .00136,  .00168,  .00224,
2        .00278,  .00327,  .00378,  .00442,  .00512,  .00580,
3        .00668,  .00759,  .00844,  .00908,  .00960,  .01016,
4        .01071,  .01153,  .01239,  .01322,  .01402,  .01471,
5        .01552,  .01633,  .01718,  .01816,  .01937,  .02030,
6        .02127,  .02228,  .02314,  .02397,  .02482,  .02575,
7        .02653,  .02746,  .02832,  .02918,  .03014,  .03112,
8        .03160,  .03245,  .03374,  .03530,  .03715,  .03968,
9        .04153,  .04277,  .04384,  .04512,  .04655,  .04754,
*        .04863,  .04977,  .05082,  .05191,  .05296,  .05413,
1        .05513,  .05633,  .05812,  .06110,  .06522,  .06989,
2        .07431,  .07923,  .08353,  .09079,  .09976,  .10896,
3        .11883,  .12337,  .12636,  .13022,  .13174,  .13272,
4        .13456,  .13649,  .13612,  .13959,  .14007,  .14516,
5        .15169,  .15864,  .16743,  .17461,  .18123,  .18951,
```

```
6       .19809,  .20683,  .21577,  .22477,  .23391,  .24334,
7       .25306,  .26108,  .26947,  .28000,  .29074,  .29968,
8       .30600,  .31331,  .32090,  .32683,  .33420,  .34053,
9       .34822,  .35561,  .36204,  .36291,  .36378,  .36559,
*       .36682,  .36689,  .36777,  .37216,  .38341,  .39934,
1       .41435,  .42923,  .44427,  .46165,  .47903,  .48454,
2       .48946,  .49535,  .50073,  .50691,  .51277,  .51687,
3       .52292,  .52981,  .53874,  .54350,  .55010,  .55514,
4       .56277,  .56842,  .57734,  .58332,  .59510,  .60860,
5       .62012,  .63159,  .64438,  .65621,  .66974,  .68277,
6       .69468,  .70626,  .71912,  .73014,  .74284,  .75493,
7       .76613,  .77733,  .78866,  .79877,  .80858,  .81544,
8       .82249,  .82861,  .83211,  .83927,  .84323,  .84705,
9       .85375,  .85948,  .86179,  .86669,  .87163,  .87643,
*       .88170,  .88537,  .89128,  .89528,  .90169,  .90768,
1       .91430,  .92067,  .92615,  .93258,  .93873,  .94445,
2       .94912,  .95395,  .95881,  .96353,  .96747,  .97175,
3       .97540,  .97891,  .98227,  .98499,  .98772,  .99013,
4       .99239,  .99417,  .99562,  .99627,  .99773,  .99870,
5       .99886,  .99886,  .99870,  .99854,  .99821,  .99789,
6       .99757,  .99708,  .99676,  .99643,  .99595,  .99530,
7       .99449,  .99384,  .99368,  .99255,  .99239,  .99255,
8       .99271,  .99271,  .99271,  .99271,  .99271,  .99271,
9       .99271,  .99271,  .99304,  .99320,  .99320,  .99336,
*       .99336,  .99352,  .99352,  .99352,  .99384,  .99384,
1       .99401,  .99417,  .99417,  .99417,  .99433,  .99449,
2       .99449,  .99465,  .99465,  .99465,  .99465,  .99465,
3       .99481,  .99481,  .99481,  .99498,  .99498,  .99498,
4       .99498,  .99530,  .99498,  .99481,  .99449,  .99433,
5       .99481,  .99530,  .99579,  .99627,  .99659,  .99676,
6       .99692,  .99724,  .99740,  .99773,  .99789,  .99773,
7       .99740,  .99724,  .99724,  .99708,  .99708,  .99692,
8       .99659,  .99643,  .99627,  .99627,  .99595,  .99579,
9       .99562,  .99514,  .99481,  .99465,  .99449,  .99401,
*       .99384,  .99368,  .99336,  .99320,  .99288,  .99255,
1       .99223,  .99191,  .99158,  .99126,  .99110,  .99062,
2       .99046,  .99013,  .98981,  .98949,  .98901,  .98869,
3       .98869,  .98869,  .98869,  .98869,  .98869,  .98869,
4       .98869,  .98869,  .98885,  .98869,  .98885,  .98885,
5       .98885,  .98885,  .98885,  .98885,  .98901,  .98917,
6       .98901,  .98901,  .98917,  .98901,  .98901,  .98885,
7       .98917,  .98901,  .98917,  .98917,  .98917,  .98917,
8       .98949,  .98949,  .98949,  .98981,  .98981,  .98981,
9       .99030,  .99030,  .99030,  .99046,  .99062,  .99062,
*       .99062,  .99110,  .99110,  .99142,  .99142,  .99142,
1       .99142,  .99191,  .99191,  .99191,  .99191,  .99191,
2       .99207,  .99223,  .99239,  .99255,  .99271,  .99271,
3       .99288,  .99288,  .99288,  .99288,  .99336,  .99336,
4       .99352,  .99352,  .99352,  .99368,  .99368,  .99368,
5       .99368,  .99401,  .99417,  .99417,  .99417,  .99433,
6       .99433,  .99465,  .99481,  .99481,  .99481,  .99498,
7       .99498,  .99498,  .99514,  .99514,  .99530,  .99514,
8       .99546,  .99546,  .99562,  .99562,  .99562,  .99546,
9       .99546,  .99530,  .99530,  .99530,  .99530,  .99514,
```

```
*       .99498,  .99481,  .99465,  .99465,  .99449,  .99433,
1       .99417,  .99401,  .99401,  .99401,  .99368,  .99352,
2       .99352,  .99336,  .99320,  .99320,  .99304,  .99271,
3       .99239,  .99239,  .99207,  .99191,  .99191,  .99158,
4       .99142,  .99110,  .99094,  .99078,  .99046,  .99030,
5       .98997,  .98981,  .98965,  .98933,  .98933,  .98885,
6       .98885,  .98852,  .98852,  .98852,  .98852,  .98885,
7       .98885,  .98917,  .98917,  .98917,  .98933,  .98949,
8       .98965,  .98981,  .98997,  .99030,  .99046,  .99046,
9       .99046,  .99078,  .99078,  .99094,  .99110,  .99110,
*       .99126,  .99142,  .99175,  .99175,  .99175,  .99207,
1       .99207,  .99239,  .99239,  .99239,  .99239,  .99271,
2       .99288,  .99288,  .99288,  .99304,  .99320,  .99320,
3       .99336,  .99368,  .99384,  .99384,  .99401,  .99417,
4       .99417,  .99433,  .99449,  .99465,  .99465,  .99481,
5       .99481,  .99481,  .99481,  .99481,  .99498,  .99498,
6       .99530,  .99530,  .99546,  .99546,  .99546,  .99546,
7       .99562,  .99562,  .99579,  .99579,  .99579,  .99595,
8       .99595,  .99595,  .99611,  .99627,  .99627,  .99627,
9       .99643,  .99627,  .99627,  .99627,  .99611,  .99611,
*       .99595,  .99579,  .99579,  .99546,  .99546,  .99530,
1       .99514,  .99498,  .99481,  .99481,  .99465,  .99465,
2       .99433,  .99433,  .99401,  .99384,  .99368,  .99352,
3       .99320,  .99288,  .99271,  .99255,  .99239,  .99207,
4       .99191,  .99175,  .99175,  .99158,  .99191,  .99288,
5       .99384,  .99401,  .99368,  .99352,  .99336,  .99320,
6       .99304,  .99304,  .99288,  .99288,  .99271,  .99239,
7       .99223,  .99191,  .99142,  .99110,  .99094,  .99062,
8       .99062,  .99030,  .98997,  .98981,  .98981,  .98949,
9       .98917,  .98869,  .98836,  .98820,  .98820,  .98788,
*       .98740,  .98708,  .98740,  .98756,  .98756,  .98772,
1       .98788,  .98788,  .98820,  .98836,  .98852,  .98869,
2       .98869,  .98869,  .98901,  .98901,  .98917,  .98917,
3       .98917,  .98949,  .98965,  .98981,  .98981,  .98981,
4       .99013,  .99013,  .99013,  .99030,  .99062,  .99046,
5       .99078,  .99078,  .99078,  .99094,  .99110,  .99126,
6       .99110,  .99142,  .99142,  .99158,  .99175,  .99175,
7       .99191,  .99191,  .99223,  .99207,  .99207,  .99223,
8       .99223,  .99239,  .99255,  .99271,  .99271,  .99271,
9       .99271,  .99288,  .99288,  .99288,  .99304,  .99304,
*       .99304,  .99320,  .99320,  .99320,  .99320,  .99336,
1       .99336,  .99336,  .99352,  .99352,  .99336,  .99320,
2       .99271,  .99239,  .99223,  .99191,  .99126,  .99046,
3       .99030,  .98981,  .98933,  .98869,  .98820,  .98772,
4       .98676,  .98595,  .98531,  .98467,  .98403,  .98355,
5       .98355,  .98371,  .98387,  .98403,  .98419,  .98435,
6       .98451,  .98451,  .98467,  .98483,  .98499,  .98499,
7       .98499,  .98531,  .98531,  .98563,  .98579,  .98611,
8       .98611,  .98643,  .98643,  .98660,  .98676,  .98708,
9       .98708,  .98724,  .98740,  .98756,  .98772,  .98788,
*       .98804,  .98820,  .98836,  .98852,  .98885,  .98901,
1       .98901,  .98901,  .98901,  .98933,  .98933,  .98949,
2       .98965,  .98981,  .99030,  .99046,  .99046,  .99013,
3       .99062,  .99078,  .99094,  .99094,  .99110,  .99126,
```

```
4       .99126,  .99110,  .99110,  .99094,  .99094,  .99078,
5       .99062,  .99062,  .98981,  .99142,  .99126,  .99288,
6       .99320,  .99223,  .98965,  .98531,  .98019,  .97891,
7       .98403,  .98836,  .99142,  .99304,  .99288,  .99110,
8       .98772,  .98323,  .97700,  .96874,  .95896,  .94943,
9       .94012,  .93012,  .91945,  .91566,  .92493,  .94043,
*       .95286,  .96368,  .97318,  .98147,  .98756,  .99078,
1       .99094,  .99062,  .99013,  .98965,  .99126,  .98708,
2       .98724,  .98419,  .97891,  .97238,  .96463,  .95599,
3       .94508,  .93642,  .93765,  .94539,  .95520,  .96400,
4       .97127,  .97795,  .98275,  .98692,  .99013,  .99158,
5       .99255,  .99207,  .99013,  .98740,  .98371,  .97843,
6       .97684,  .98083,  .98563,  .98981,  .99320,  .99530,
7       .99643,  .99659,  .99514,  .99368,  .99158,  .99046,
8       .99078,  .99062,  .99078,  .99094,  .99094,  .99094,
9       .99110,  .99110,  .99126,  .99126,  .99126,  .99158,
*       .99142,  .99126,  .99142,  .99142,  .99126,  .99142,
1       .99158,  .99142,  .99142,  .99142,  .99126,  .99142,
2       .99142,  .99110,  .99126,  .99126,  .99110,  .99110,
3       .99110,  .99110,  .99094,  .99094,  .99094,  .99078,
4       .99062,  .99062,  .99062,  .99078,  .99062,  .99062,
5       .99030,  .99030,  .99013,  .99013,  .99013,  .99013,
6       .99013,  .99013,  .99013,  .99013,  .99013,  .99013,
7       .99013,  .99013,  .99013,  .99013,  .99013,  .99013,
8       .99013,  .99013,  .99013,  .99013,  .98997,  .98997,
9       .98997,  .98997,  .99368,  .99384,  .99401,  .99433,
*       .99449,  .99481,  .99465,  .99498,  .99498,  .99465,
1       .99449,  .99384,  .99320,  .99255,  .99175,  .99126,
2       .99046,  .98949,  .98869,  .98772,  .98676,  .98563,
3       .98483,  .98371,  .98371,  .98387,  .98419,  .98483,
4       .98483,  .98515,  .98563,  .98579,  .98595,  .98643,
5       .98676/

   real                          arrayx (npoints)
5   /   .99714,  .99714,  .99714,  .99714,  .99714,  .99714,
6       .99714,  .99714,  .99714,  .99714,  .99714,  .99714,
7       .99714,  .99714, 1.00000, 1.00000, 1.00000, 1.00000,
8      1.00000, 1.00000, 1.00000, 1.00000, 1.00000, 1.00000,
9      1.00000, 1.00000, 1.00000, 1.00000, 1.00000, 1.00000,
*      1.00000, 1.00000, 1.00000, 1.00000, 1.00000, 1.00000,
1      1.00000, 1.00000, 1.00000, 1.00000, 1.00000, 1.00000,
2      1.00000, 1.00000,  .99714,  .98861,  .95785,  .90664,
3       .83789,  .75542,  .66770,  .62623,  .54810,  .64373,
4       .73537,  .82323,  .90139,  .96061,  .99429,  .99429,
5       .96894,  .91456,  .83298,  .73537,  .67586,  .61858,
6       .55673,  .49705,  .52783,  .49233,  .57079,  .66973,
7       .75768,  .83543,  .90139,  .95234,  .98295,  .99145,
8       .98861,  .98861,  .99145,  .99145,  .98295,  .97173,
9       .92791,  .87041,  .79929,  .72226,  .64176,  .55500,
*       .47535,  .49705,  .58515,  .69873,  .80641,  .89616,
1       .95509,  .97452,  .96338,  .93060,  .88321,  .82809,
2       .75768,  .68617,  .60726,  .52287,  .45446,  .51794,
3       .60539,  .74645,  .84530,  .91988,  .97173,  .99429,
4       .98295,  .97733,  .97733,  .97733,  .97733,  .97733,
```

```
5       .99714,  .99714,  .99714,  .99429,  .99145,  .99429,
6       .99429,  .99429,  .99429,  .99714,  .99714,  .99714,
7       .99714,  .99714,  .99714,  .99429,  .99429,  .99429,
8       .99429,  .99429,  .99429,  .99714,  .99714, 1.00000,
9      1.00000, 1.00000, 1.00000, 1.00000, 1.00000,  .99714,
*       .99714,  .99714,  .99429,  .99145,  .99145,  .98861,
1       .98295,  .98014,  .97452,  .96894,  .96615,  .96338,
2       .96615,  .96615,  .96615,  .96894,  .96894,  .97173,
3       .97173,  .97173,  .97452,  .97452,  .97452,  .97452,
4       .97452,  .97452,  .97452,  .97452,  .97733,  .97452,
5       .97452,  .97452,  .97452,  .97173,  .97452,  .97173,
6       .97173,  .96894,  .96894,  .96894,  .96894,  .96894,
7       .96894,  .96894,  .96894,  .96894,  .96894,  .97173,
8       .97173,  .97173,  .97173,  .97173,  .97173,  .97452,
9       .97733,  .97733,  .98014,  .98014,  .98295,  .98295,
*       .98295,  .98295,  .98295,  .98295,  .98295,  .98014,
1       .97733,  .97452,  .97452,  .97173,  .96894,  .96615,
2       .96338,  .96894,  .97452,  .98014,  .98295,  .98578,
3       .98861,  .99145,  .99429,  .99429,  .99714,  .99714,
4       .99714,  .99714,  .99429,  .99429,  .99429,  .99714,
5       .99714,  .99714, 1.00000, 1.00000, 1.00000, 1.00000,
6       .99714,  .99714,  .99429,  .99429,  .99145,  .98861,
7       .98578,  .98014,  .97733,  .97173,  .96894,  .96615,
8       .96061,  .96338,  .96894,  .97452,  .98014,  .98295,
9       .98578,  .98861,  .99145,  .99429,  .99429,  .99714,
*       .99714,  .99714,  .99714,  .99714,  .99714,  .99714,
1       .99714, 1.00000,  .99714,  .99714,  .99714,  .99714,
2       .99429,  .99145,  .98861,  .98295,  .97733,  .96894,
3       .96338,  .96061,  .96894,  .97173,  .97173,  .98578,
4       .99429,  .99429,  .99714,  .99714,  .99714,  .99714,
5       .99714,  .99714,  .99714,  .99714,  .99714,  .99714,
6       .99714,  .99429,  .99429,  .99429,  .99429,  .99429,
7       .99429,  .99429,  .99429,  .99714,  .99714,  .99714,
8       .99429,  .99429,  .99429,  .99429,  .99429,  .99429,
9       .99429,  .99429,  .99429,  .99145,  .99145,  .99145,
*       .99145,  .98861,  .98861,  .98578,  .98578,  .98295,
1       .98295,  .98104,  .98104,  .97733,  .97452,  .97452,
2       .97173,  .96894,  .96615,  .96338,  .96061,  .95785,
3       .95509,  .95509,  .95234,  .95234,  .95509,  .95785,
4       .96338,  .96615,  .96894,  .97452,  .97452,  .98014,
5       .98295,  .98295,  .98578,  .98861,  .98861,  .98861,
6       .98861,  .99145,  .99145,  .99145,  .99145,  .99145,
7       .99145,  .99145,  .98861,  .99145,  .99145,  .99145,
8       .99145,  .99145,  .99145,  .99145,  .99145,  .99145,
9       .99145,  .99145,  .98861,  .98861,  .98861,  .98861,
*       .98578,  .98578,  .98295,  .98295,  .98014,  .98014,
1       .97733,  .97733,  .97173,  .97173,  .96894,  .96615,
2       .96338,  .96061,  .95785,  .95509,  .95234,  .94960,
3       .94687,  .94414,  .94414,  .94687,  .94960,  .95509,
4       .95785,  .96061,  .96615,  .96894,  .97173,  .97452,
5       .97733,  .98014,  .98295,  .98295,  .98578,  .98578,
6       .98578,  .98861,  .98861,  .98861,  .98861,  .98861,
7       .98861,  .98578,  .98578,  .98578,  .98578,  .98861,
8       .98861,  .98861,  .98578,  .98578,  .98578,  .98295,
```

```
9       .98014,  .97733,  .97173,  .96615,  .96338,  .95509,
*       .94960,  .94414,  .93870,  .93870,  .94142,  .94142,
1       .94142,  .94142,  .94414,  .94414,  .94414,  .94414,
2       .94687,  .94687,  .94687,  .94687,  .94687,  .94687,
3       .94960,  .94960,  .94960,  .94960,  .94960,  .94960,
4       .95234,  .95234,  .95234,  .95234,  .95234,  .95234,
5       .95509,  .95509,  .95234,  .95234,  .95509,  .95509,
6       .95509,  .95509,  .95785,  .95785,  .95785,  .95785,
7       .95785,  .95785,  .96061,  .96061,  .96061,  .96061,
8       .96338,  .96338,  .96338,  .96338,  .96338,  .96338,
9       .96615,  .96615,  .96615,  .96615,  .96615,  .96615,
*       .96338,  .96894,  .96615,  .96615,  .96894,  .96894,
1       .96615,  .96615,  .96894,  .96894,  .96894,  .96894,
2       .96894,  .96894,  .96894,  .96894,  .96894,  .96894,
3       .97173,  .97173,  .97173,  .97173,  .97173,  .97173,
4       .97173,  .97173,  .97173,  .96894,  .96894,  .96894,
5       .96894,  .96615,  .96615,  .96615,  .96338,  .96338,
6       .96338,  .96338,  .96061,  .96061,  .96061,  .95785,
7       .95785,  .95785,  .95785,  .95509,  .95509,  .95509,
8       .95234,  .95234,  .95234,  .95509,  .95509,  .95509,
9       .95234,  .95234,  .95234,  .95234,  .95234,  .94960,
*       .95234,  .95234,  .95234,  .95234,  .95509,  .95509,
1       .95234,  .94960,  .95234,  .96061,  .97452,  .98295,
2       .98861,  .98578,  .97733,  .95785,  .93599,  .90401,
3       .87041,  .82809,  .78521,  .73758,  .68617,  .63395,
4       .58153,  .52783,  .47535,  .42183,  .37225,  .32328,
5       .27793,  .23468,  .19870,  .16371,  .13457,  .10990,
6       .08475,  .06488,  .04882,  .03585,  .02587,  .01771,
7       .01172,  .00751,  .00437,  .00233,  .00114,  .00048,
8       .00017,  .00005,  .00001,  .00001,  .00001,  .00001,
9       .00001,  .00001,  .00001,  .00001,  .00001,  .00001,
*       .00001,  .00001,  .00001,  .00001,  .00001,  .00001,
1       .00001,  .00001,  .00001,  .00001,  .00001,  .00001,
2       .00001,  .00001,  .00001,  .00001,  .00001,  .00001,
3       .00001,  .00001,  .00001,  .00001,  .00001,  .00001,
4       .00001,  .00001,  .00001,  .00001,  .00001,  .00001,
5       .00001,  .00001,  .00001,  .00001,  .00001,  .00001,
6       .00001,  .00001,  .00001,  .00001,  .00001,  .00001,
7       .00001,  .00001,  .00001,  .00001,  .00001,  .00001,
8       .00001,  .00001,  .00001,  .00001,  .00001,  .00001,
9       .00001,  .00001,  .00001,  .00001,  .00001,  .00001,
*       .00001,  .00001,  .00001,  .00001,  .00001,  .00001,
1       .00001,  .00001,  .00001,  .00001,  .00001,  .00001,
2       .00001,  .00001,  .00001,  .00001,  .00001,  .00001,
3       .00001,  .00001,  .00001,  .00001,  .00001,  .00001,
4       .00001,  .00001,  .00001,  .00001,  .00001,  .00001,
5       .00001,  .00001,  .00001,  .00001,  .00001,  .00001,
6       .00001,  .00001,  .00001,  .00001,  .00001,  .00001,
7       .00001,  .00001,  .00001,  .00001,  .00001,  .00001,
8       .00001,  .00001,  .00001,  .00001,  .00001,  .00001,
9       .00001,  .00001,  .00001,  .00001,  .00001,  .00001,
*       .00001,  .00001,  .00001,  .00001,  .00001,  .00001,
1       .00001,  .00001,  .00001,  .00001,  .00001,  .00001,
2       .00001,  .00001,  .00001,  .00001,  .00001,  .00001,
```

```
3       .00001,  .00001,  .00001,  .00001,  .00001,  .00001,
4       .00001,  .00001,  .00001,  .00001,  .00001,  .00001,
5       .00001,  .00001,  .00001,  .00001,  .00001,  .00001,
6       .00001,  .00001,  .00001,  .00001,  .00001,  .00001,
7       .00001,  .00001,  .00001,  .00001,  .00001,  .00001,
8       .00001,  .00001,  .00001,  .00001,  .00001,  .00001,
9       .00001,  .00001,  .00001,  .00001,  .00001,  .00001,
*       .00001,  .00001,  .00001,  .00001,  .00001,  .00001,
1       .00001,  .00001,  .00001,  .00001,  .00001,  .00001,
2       .00001,  .00001,  .00001,  .00001,  .00001,  .00001,
3       .00001,  .00001,  .00001,  .00001,  .00001,  .00001,
4       .00001,  .00001,  .00001,  .00001,  .00001,  .00001,
5       .00001,  .00001,  .00001,  .00001,  .00001,  .00001,
6       .00001,  .00001,  .00001,  .00001,  .00001,  .00001,
7       .00001,  .00001,  .00001,  .00001,  .00001,  .00001,
8       .00001,  .00001,  .00001,  .00001,  .00001,  .00001,
9       .00001,  .00001,  .00001,  .00001,  .00001,  .00001,
*       .00001,  .00001,  .00001,  .00001,  .00001,  .00001,
1       .00001,  .00001,  .00001,  .00001,  .00001,  .00001,
2       .00001,  .00001,  .00001,  .00001,  .00001,  .00001,
3       .00001,  .00001,  .00001,  .00001,  .00001,  .00001,
4       .00001,  .00001,  .00001,  .00001,  .00001,  .00001,
5       .00001,  .00001,  .00001,  .00001,  .00001,  .00001,
6       .00001,  .00001,  .00001,  .00001,  .00001,  .00001,
7       .00001,  .00001,  .00001,  .00001,  .00001,  .00001,
8       .00001,  .00001,  .00001,  .00001,  .00001,  .00001,
9       .00001,  .00001,  .00001,  .00001,  .00001,  .00001,
*       .00001,  .00001,  .00001,  .00001,  .00001,  .00001,
1       .00001,  .00001,  .00001,  .00001,  .00001,  .00001,
2       .00001,  .00001,  .00001,  .00001,  .00001,  .00001,
3       .00001,  .00001,  .00001,  .00001,  .00001,  .00001,
4       .00001,  .00001,  .00001,  .00001,  .00001,  .00001,
5       .00001,  .00001,  .00001,  .00001,  .00001,  .00001,
6       .00001,  .00001,  .00001,  .00001,  .00001,  .00005,
7       .00019,  .00052,  .00120,  .00228,  .00395,  .00561,
8       .00785,  .01033,  .01201,  .01611,  .01881,  .02176,
9       .02780,  .03397,  .03673,  .04323,  .05065,  .05884,
*       .06899,  .07686,  .09101,  .10174,  .12099,  .14155,
1       .16746,  .19580,  .22319,  .25916,  .29783,  .33782,
2       .37349,  .41365,  .45739,  .50340,  .54468,  .59244,
3       .63590,  .67997,  .72443,  .76221,  .80165,  .83789,
4       .87296,  .90139,  .92523,  .93599,  .96061,  .97733,
5       .98014,  .98014,  .97733,  .97452,  .96894,  .96338,
6       .95785,  .94960,  .94414,  .93870,  .93060,  .91988,
```

```
7       .90664,  .89616,  .89356,  .87551,  .87296,  .87551,
8       .87807,  .87807,  .87807,  .87807,  .87807,  .87807,
9       .87807,  .87807,  .88321,  .88578,  .88578,  .88837,
*       .88837,  .89096,  .89096,  .89096,  .89616,  .89616,
1       .89877,  .90139,  .90139,  .90139,  .90401,  .90664,
2       .90664,  .90927,  .90927,  .90927,  .90927,  .90927,
3       .91192,  .91192,  .91192,  .91456,  .91456,  .91456,
4       .91456,  .91988,  .91456,  .91192,  .90664,  .90401,
5       .91192,  .91988,  .92791,  .93599,  .94142,  .94414,
6       .94687,  .95234,  .95509,  .96061,  .96338,  .96061,
7       .95509,  .95234,  .95234,  .94960,  .94960,  .94687,
8       .94142,  .93870,  .93599,  .93599,  .93060,  .92791,
9       .92523,  .91722,  .91192,  .90927,  .90664,  .89877,
*       .89616,  .89356,  .88837,  .88578,  .88064,  .87551,
1       .87041,  .86534,  .86029,  .85527,  .85277,  .84530,
2       .84283,  .83789,  .83298,  .82809,  .82081,  .81599,
3       .81599,  .81599,  .81599,  .81599,  .81599,  .81599,
4       .81599,  .81599,  .81839,  .81599,  .81839,  .81839,
5       .81839,  .81839,  .81839,  .81839,  .82081,  .82323,
6       .82081,  .82081,  .82323,  .82081,  .82081,  .81839,
7       .82323,  .82081,  .82323,  .82323,  .82323,  .82323,
8       .82809,  .82809,  .82809,  .83298,  .83298,  .83298,
9       .84035,  .84035,  .84035,  .84283,  .84530,  .84530,
*       .84530,  .85277,  .85277,  .85778,  .85778,  .85778,
1       .85778,  .86534,  .86534,  .86534,  .86534,  .86534,
2       .86787,  .87041,  .87296,  .87551,  .87807,  .87807,
3       .88064,  .88064,  .88064,  .88064,  .88837,  .88837,
4       .89096,  .89096,  .89096,  .89356,  .89356,  .89356,
5       .89356,  .89877,  .90139,  .90139,  .90139,  .90401,
6       .90401,  .90927,  .91192,  .91192,  .91192,  .91456,
7       .91456,  .91456,  .91722,  .91722,  .91988,  .91722,
8       .92255,  .92255,  .92523,  .92523,  .92523,  .92255,
9       .92255,  .91988,  .91988,  .91988,  .91988,  .91722,
*       .91456,  .91192,  .90927,  .90927,  .90664,  .90401,
1       .90139,  .89877,  .89877,  .89877,  .89356,  .89096,
2       .89096,  .88837,  .88578,  .88578,  .88321,  .87807,
3       .87296,  .87296,  .86787,  .86534,  .86534,  .86029,
4       .85778,  .85277,  .85028,  .84779,  .84283,  .84035,
5       .83543,  .83298,  .83053,  .82566,  .82566,  .81839,
6       .81839,  .81358,  .81358,  .81358,  .81358,  .81839,
7       .81839,  .82323,  .82323,  .82323,  .82566,  .82809,
8       .83053,  .83298,  .83543,  .84035,  .84283,  .84283,
9       .84283,  .84779,  .84779,  .85028,  .85277,  .85277,
*       .85527,  .85778,  .86282,  .86282,  .86282,  .86787,
1       .86787,  .87296,  .87296,  .87296,  .87296,  .87807,
2       .88064,  .88064,  .88064,  .88321,  .88578,  .88578,
3       .88837,  .89356,  .89616,  .89616,  .89877,  .90139,
4       .90139,  .90401,  .90664,  .90927,  .90927,  .91192,
5       .91192,  .91192,  .91192,  .91192,  .91456,  .91456,
6       .91988,  .91988,  .92255,  .92255,  .92255,  .92255,
7       .92523,  .92523,  .92791,  .92791,  .92791,  .93060,
8       .93060,  .93060,  .93329,  .93599,  .93599,  .93599,
9       .93870,  .93599,  .93599,  .93599,  .93329,  .93329,
*       .93060,  .92791,  .92791,  .92255,  .92255,  .91988,
```

```
1       .91722,  .91456,  .91192,  .91192,  .90927,  .90927,
2       .90401,  .90401,  .89877,  .89616,  .89356,  .89096,
3       .88578,  .88064,  .87807,  .87551,  .87296,  .86787,
4       .86534,  .86282,  .86282,  .86029,  .86534,  .88064,
5       .89616,  .89877,  .89356,  .89096,  .88837,  .88578,
6       .88321,  .88321,  .88064,  .88064,  .87807,  .87296,
7       .87041,  .86534,  .85778,  .85277,  .85028,  .84530,
8       .84530,  .84035,  .83543,  .83298,  .83298,  .82809,
9       .82323,  .81599,  .81118,  .80879,  .80879,  .80403,
*       .79693,  .79222,  .79693,  .79929,  .79929,  .80165,
1       .80403,  .80403,  .80879,  .81118,  .81358,  .81599,
2       .81599,  .81599,  .82081,  .82081,  .82323,  .82323,
3       .82323,  .82809,  .83053,  .83298,  .83298,  .83298,
4       .83789,  .83789,  .83789,  .84035,  .84530,  .84283,
5       .84779,  .84779,  .84779,  .85028,  .85277,  .85527,
6       .85277,  .85778,  .85778,  .86029,  .86282,  .86282,
7       .86534,  .86534,  .87041,  .86787,  .86787,  .87041,
8       .87041,  .87296,  .87551,  .87807,  .87807,  .87807,
9       .87807,  .88064,  .88064,  .88064,  .88321,  .88321,
*       .88321,  .88578,  .88578,  .88578,  .88578,  .88837,
1       .88837,  .88837,  .89096,  .89096,  .88837,  .88578,
2       .87807,  .87296,  .87041,  .86534,  .85527,  .84283,
3       .84035,  .83298,  .82566,  .81599,  .80879,  .80165,
4       .78754,  .77594,  .76676,  .75768,  .74869,  .74200,
5       .74200,  .74423,  .74645,  .74869,  .75093,  .75317,
6       .75542,  .75542,  .75768,  .75994,  .76221,  .76221,
7       .76221,  .76676,  .76676,  .77134,  .77363,  .77825,
8       .77825,  .78288,  .78288,  .78521,  .78754,  .79222,
9       .79222,  .79457,  .79693,  .79929,  .80165,  .80403,
*       .80641,  .80879,  .81118,  .81358,  .81839,  .82081,
1       .82081,  .82081,  .82081,  .82566,  .82566,  .82809,
2       .83053,  .83298,  .84035,  .84283,  .84283,  .83789,
3       .84530,  .84779,  .85028,  .85028,  .85277,  .85527,
4       .85527,  .85277,  .85277,  .85028,  .85028,  .84779,
5       .84530,  .84530,  .83298,  .85778,  .85527,  .88064,
6       .88578,  .87041,  .83053,  .76676,  .69662,  .67997,
7       .74869,  .81118,  .85778,  .88321,  .88064,  .85277,
8       .80165,  .73758,  .65562,  .55848,  .45887,  .37598,
9       .30717,  .24492,  .19011,  .17323,  .21684,  .30928,
*       .40428,  .50500,  .60914,  .71362,  .79929,  .84779,
1       .85028,  .84530,  .83789,  .83053,  .85527,  .79222,
2       .79457,  .75093,  .67997,  .59982,  .51468,  .43154,
3       .34241,  .28279,  .29073,  .34472,  .42458,  .50821,
4       .58697,  .66770,  .73098,  .78988,  .83789,  .86029,
5       .87551,  .86787,  .83789,  .79693,  .74423,  .67381,
6       .65362,  .70508,  .77134,  .83298,  .88578,  .91988,
7       .93870,  .94142,  .91722,  .89356,  .86029,  .84283,
8       .84779,  .84530,  .84779,  .85028,  .85028,  .85028,
9       .85277,  .85277,  .85527,  .85527,  .85527,  .86029,
*       .85778,  .85527,  .85778,  .85778,  .85527,  .85778,
1       .86029,  .85778,  .85778,  .85778,  .85527,  .85778,
2       .85778,  .85277,  .85527,  .85527,  .85277,  .85277,
3       .85277,  .85277,  .85028,  .85028,  .85028,  .84779,
4       .84530,  .84530,  .84530,  .84779,  .84530,  .84530,
```

```
     5       .84035,  .84035,  .83789,  .83789,  .83789,  .83789,
     6       .83789,  .83789,  .83789,  .83789,  .83789,  .83789,
     7       .83789,  .83789,  .83789,  .83789,  .83789,  .83789,
     8       .83789,  .83789,  .83789,  .83789,  .83543,  .83543,
     9       .83543,  .83543,  .89356,  .89616,  .89877,  .90401,
     *       .90664,  .91192,  .90927,  .91456,  .91456,  .90927,
     1       .90664,  .89616,  .88578,  .87551,  .86282,  .85527,
     2       .84283,  .82809,  .81599,  .80165,  .78754,  .77134,
     3       .75994,  .74423,  .74423,  .74645,  .75093,  .75994,
     4       .75994,  .76448,  .77134,  .77363,  .77594,  .78288,
     5       .78754/

c Initializations and checks

        secs = dpsecs
        v2u_sc_gain = 1.0E-10
        if (secs.lt.tstart .or. secs.ge.tstop) return

c Prepare for interpolation

        i = (secs - tstart)/dt + 1
        frac = amod (secs, dt)/dt

c Interpolate

        if (band.eq.'S' .or. band.eq.'s') go to 20
        if (band.eq.'X' .or. band.eq.'x') go to 40
        stop 'V2U_SC_GAIN: Illegal input value for  BAND'

   20   v2u_sc_gain = (1. - frac) * arrays(i) + frac * arrays(i+1)
        go to 60

   40   v2u_sc_gain = (1. - frac) * arrayx(i) + frac * arrayx(i+1)

   60   return
        end
```

APPENDIX I
Gain Correction for Canberra (DSS43) Antenna Mispointing

The following FORTRAN77 subprogram may be used to estimate signal level degradation resulting from mispointing of the Canberra (DSS43) 64-m ground antenna during the Uranus radio occultation period.

```
      function v2u_dss43_gain (dpsecs, band)

c Function returns DSS43 antenna gain during Voyager 2 Uranus encounter.

c At X-band function is interpolation of data plotted in Figs. 8 and 16 of
c       "DSS-43 Antenna Gain Analysis for Voyager Uranus Encounter
c        Radio Science Data Correction" by Slobin and Imbriale
c        IOM #3331-086-084, 16 December 1986
c Gain returned is linear, normalized to  74 dB  at X-band

c At S-band the function returns unity


c Input  dpsecs  is double precision earth receive time in seconds from
c  0h on 24 Jan 86 UTC.  Valid range is
c      from            21:00:00 on 24 Jan 1986   (dpsecs = 75600.)
c      to              03:00:00 on 25 Jan 1986   (dpsecs = 97200.)
c  If  dpsecs  is outside these ranges, the function returns  1.0E-10.

c Input  band  should be either  'S'  or  's'  for S-band
c                                'X'  or  'x'  for X-band

c RAS - 2 Jan 87
c Modified to include squint correction -- RAS -- 3 Feb 87

      parameter               (tstart = 75600.)
      parameter               (tstop  = 97200.)
      parameter               (dt     = 1800.)

      parameter               (npoints = (tstop - tstart)/dt + 1)

      double precision        dpsecs
      character*1             band

      real                    arrays (npoints)
     *   /  1.00000, 1.00000, 1.00000, 1.00000, 1.00000, 1.00000,
     *      1.00000, 1.00000, 1.00000, 1.00000, 1.00000, 1.00000,
     *      1.00000/

      real                    arrayx (npoints)
     *   / 73.660, 73.440, 73.180, 72.970, 72.850, 72.880,
     *     73.060, 73.300, 73.560, 73.750, 73.910, 74.025,
     *     74.090/
```

```
c Initializations and checks

      secs = dpsecs
      v2u_dss43_gain = 1.0E-10
      if (secs.lt.tstart .or. secs.ge.tstop) return

c Prepare for interpolation

      i = (secs - tstart)/dt + 1
      frac = amod (secs, dt)/dt

c Interpolate

      if (banv.eq.'S' .or. band.eq.'s') go to 20
      if (band.eq.'X' .or. band.eq.'x') go to 40
      stop 'V2U_DSS43_GAIN: Illegal input value for  BAND'

 20   v2u_dss43_gain = (1. - frac) * arrays(i) + frac * arrays(i+1)
      go to 60

 40   v2u_dss43_gain = (1. - frac) * arrayx(i) + frac * arrayx(i+1)
      v2u_dss43_gain = 0.1 * (v2u_dss43_gain - 74.0)
      v2u_dss43_gain = 10.**v2u_dss43_gain

 60   return
      end
```

FILE OF STEERING COEFFICIENTS
START TIME: 77000.0 (SECONDS SINCE MIDNIGHT)
END TIME: 96701.0
DAY: 24 MONTH: 1 YEAR: 1986
STATION: DSS49 FREQUENCY BAND: X
THE FIRST FOUR NUMBERS ARE COEFFICIENTS C0,C1,C2,C3.
THE FIFTH AND SIXTH NUMBERS ARE THE TIMES OVER WHICH
THE COEFFICIENTS ARE VALID. THE TIME USED IN THE
POLYNOMIAL EQUATION SHOULD BE THE TIME SINCE THE
START OF THE VALID INTERVAL.

22657.8707306832	7.648283667354 42E-02	2.245426677061 21E-04	-1.252572369882 71E-07	77000. 77206.
22682.0599119663	.153079244625141	1.471075052021 91E-04	-1.182728342690 54E-07	77206. 77412.
22718.8029710948	.198669987101083	7.400790290712 93E-05	-1.102550906024 73E-07	77412. 77618.
22761.9057580903	.215167609351328	5.830706662186 96E-06	-1.016071686462 65E-07	77618. 77824.
22805.5894863121	.204673573157289	-5.698836915907 48E-05	-9.277951041501 35E-08	77824. 78030.
22844.5228225402	.169423095723884	-1.142924522086 58E-04	-8.377703855109 96E-08	78030. 78236.
22873.8415023013	.111715773180909	-1.660452730727 03E-04	-7.458567179478 86E-08	78236. 78442.
22889.1566401496	3.385083002211 44E-02	-2.121505664949 36E-04	-6.574154543188 2E-08	78442. 78648.
22886.5523892007	-6.188707651919 22E-02	-2.527512158846 93E-04	-5.731591180536 43E-08	78648. 78854.
22862.5768556855	-.173278593281443	-2.881136481117 32E-04	-4.918176556895 35E-08	78854. 79060.
22814.2251367531	-.298203462140303	-3.184828053321 92E-04	-4.142546040052 67E-08	79060. 79266.
22738.9179534725	-.434662493634541	-3.440453391236 7E-04	-3.450784289951 22E-08	79266. 79466.
22637.9475784376	1.60403627556177	-3.647197507246 15E-04	-2.810397816567 52E-08	79466. 79672.
22952.6561240553	1.4502250617708	-3.820512226981 53E-04	-2.199727254831 31E-08	79672. 79878.
23234.9974649846	1.2900442783587	-3.956352720696 75E-04	-1.660414640067 29E-08	79878. 80084.
23465.8122575283	1.12495022390445	-4.058648933892 01E-04	-1.178885132984 3E-08	80084. 80290.
23698.225664772	.956254585874767	-4.131162540512 54E-04	-7.413897849793 83E-09	80290. 80496.
23877.6182971745	.785125887204974	-4.176860107694 38E-04	-3.548816673518 98E-09	80496. 80702.
24021.5982832834	.612602385218356	-4.198658950318 73E-04	-2.256291357254 73E-10	80702. 80908.
24129.9749731086	.439601329367011	-4.199779702441 37E-04	2.673265773067 46E-09	80908. 81114.
24202.7340310104	.266924050217765	-4.183063780162 46E-04	5.248763403927 44E-09	81114. 81320.
24240.0150196217	9.525954897687 79E-02	-4.150526383892 02E-04	7.376852289678 36E-09	81320. 81526.
24242.0898000337	-7.479455504104 13E-02	-4.104767002265 75E-04	9.200686655185 17E-09	81526. 81732.
24209.3435631543	-.242733007481473	-4.047699233636 81E-04	1.070725869938 15E-08	81732. 81938.
24142.2573480308	-.408127968818697	-3.981423051665 32E-04	1.201735578989 77E-08	81938. 82144.
24041.3924731053	-.570629265531183	-3.907052616536 94E-04	1.298761371103 74E-08	82144. 82350.
23907.3764112517	-.729942112546705	-3.826623062708 45E-04	1.382315297200 63E-08	82350. 82556.
23740.8905178979	-.885835844909065	-3.741095485514 26E-04	1.445105256518 84E-08	82556. 82762.
23542.6589494869	-1.03812648629817	-3.651734427843 92E-04	1.493455138433 39E-08	82762. 82968.
23313.4389481917	-1.18667515640069	-3.559418554543 53E-04	1.525715344192 24E-08	82968. 83174.
23054.0124926231	-1.33138064892944	-3.465027099118 68E-04	1.543687039056 36E-08	83174. 83380.
22765.1788362264	-1.47217288777395	-3.369683549287 49E-04	1.566299985370 18E-08	83380. 83477.
22619.2218260578	.253427441346026	-3.324301991229 59E-04	1.559364369184 2E-08	83477. 83683.
22657.457187809	.118450370204522	-3.227890119522 81E-04	1.553716539786 11E-08	83683. 83889.
22668.295912601	-1.256068926482 5E-02	-3.131807567757 5E-04	1.546897806698 38E-08	83889. 84079.
22654.7096580416	6.80388473598377	-3.043549903212 85E-04	1.530365059833 33E-08	84079. 84285.
24043.5280869826	6.68043890771198	-2.948982795661 28E-04	1.515658502874 57E-08	84285. 84480.
25335.1125510893	3.7047155620014	-2.860303837134 22E-04	1.488237635448 25E-08	84480. 84686.
26086.2760704942	3.58876503830638	-2.768290578252 31E-04	1.463965184350 04E-08	84686. 84892.
26813.9421276301	3.47657314200122	-2.677786931832 97E-04	1.431781643491 74E-08	84892. 85098.
27518.877901975	3.36807011981344	-2.589283461216 64E-04	1.402849193456 52E-08	85098. 85329.
29322.0547188259	-5.1171130340 6364	-2.492218185160 73E-04	1.362871537375 02E-08	85329. 85535.
28257.4725964404	-5.2180585345 2063	-2.407997822466 29E-04	1.330650964279 81E-08	85535. 85741.
27172.4502818286	-5.3155764219 3097	-2.325761113796 67E-04	1.292403391261 92E-08	85741. 85947.
26067.6849185749	-5.4097534805 5787	-2.245897159558 4E-04	1.259542998525 5E-08	85947. 86153.
24943.8551193252	-5.5006835890 0056	-2.168052154904 06E-04	1.220049792736 51E-08	86153. 86359.
23801.6206083744	-5.5884553462 4706	-2.092625941611 16E-04	1.186404882619 14E-08	86359. 86565.
22641.6222529336	-5.6731633444 4776	-2.019291018485 61E-04	1.148596245161 29E-08	86565. 86771.
21464.4819487817	-5.7548971416131	-1.948291139692 42E-04	1.114792837820 26E-08	86771. 86977.
20270.8028224669	-5.8337489376663	-1.879437486269 41E-04	1.080331880573 2E-08	86977. 87183.
19061.1694010166	-5.9098081226662 4	-1.812728099533 77E-04	1.045454248072 48E-08	87183. 87389.
17836.1478264704	-5.9831618086563 7	-1.748479081465 21E-04	1.033573891108 87E-08	87389. 87484.
17266.1783138811	3.5970648391699 8	-1.719001861144 28E-04	9.942966144394 86E-09	87484. 87690.

STEER1 coefficients for Parkes data. These are stored in card image format (ASCII characters) 100 cards per physical record in File 46 of Tape 15.

17999.9658340327	3.52750688765459	-1.65755209176 27E-04	9.64766503991762E-09	87690.	87896.
18719.6826029457	3.46044177433566	-1.59792827134572E-04	9.30124544079763E-09	87896.	88102.
19425.8339498229	3.39579043804034	-1.54045485839091E-04	9.02353690884306E-09	88102.	88308.
20118.9085879214	3.33347025981568	-1.48469511094 31E-04	8.69102493513545E-09	88308.	88514.
20799.3789846114	3.27340629218013	-1.43094779915853E-04	8.41560977065881E-09	88514.	88720.
21467.7018784321	3.21552144656061	-1.37892169461098E-04	8.12568660372002E-09	88720.	88926.
22124.3187375776	3.15974358479032	-1.32876477162496E-04	7.90210881683461E-09	88926.	89059.
22542.2327731438	.112087366617596	-1.29718162685608E-04	7.70296993573356E-09	89059.	89265.
22559.8853886611	5.962210869357 96E-02	-1.24957305526165E-04	7.41030641397157E-09	89265.	89471.
22566.9296343699	9.082549956871 13E-03	-1.20374141603471E-04	7.18178692219221E-09	89471.	89677.
22563.7552244477	-3.95980512290988E-02	-1.15940094581904E-04	6.94859563190645E-09	89677.	89883.
22550.7387353852	-8.6482278740641E-02	-1.11639696653235E-04	6.59842138274986E-09	89883.	89968.
22542.5851971395	.25546221844402	-1.09925094647188E-04	6.61351448256 76E-09	89968.	90174.
22590.6034469492	.211014404759788	-1.05842996871373E-04	6.40252448777865E-09	90174.	90380.
22629.6368306055	.168221016217431	-1.01894106008302E-04	6.18276134932374E-09	90380.	90586.
22660.0204302258	.127026925482968	-9.80782752783915E-05	5.97846210103498E-09	90586.	90792.
22682.0781898014	8.737809342273 75E-02	-9.43814952121196E-05	5.75118268099663E-09	90792.	90998.
22696.1231796965	4.922496525511 79E-02	-9.08257522650709E-05	5.59195235572 99E-09	90998.	91204.
22702.4581247344	1.251506438578 56E-02	-8.73693997855674E-05	5.37871160427749E-09	91204.	91410.
22701.3756398558	-2.2796766705757E-02	-8.40424944741883E-05	5.22259846464437E-09	91410.	91616.
22693.1587336137	-5.67585691225848E-02	-8.08147925631716E-05	5.03835304161883E-09	91616.	91822.
22678.0810561925	-8.941316427460 28E-02	-7.77029872492492E-05	4.89312457461591E-09	91822.	92028.
22656.4073151797	-.120805214836044	-7.46788337639937E-05	4.71016841595366E-09	92028.	92234.
22628.3935453593	-.150973768119318	-7.17647314965416E-05	4.56785215990431E-09	92234.	92440.
22594.2874723039	-.179959670499406	-6.89438023198466E-05	4.43147323001184E-09	92440.	92646.
22554.3288201093	-.207801198749818	-6.62097668182 31E-05	4.28256155324781E-09	92646.	92852.
22508.7495328672	-.234534803768185	-6.35664681624762E-05	4.15337625264781E-09	92852.	93058.
22457.774164699	-.260198431296849	-6.06720589653209E-05	-7.03114050405996E-09	93058.	93073.
22453.8575132861	.187655751005428	-6.08158771902924E-05	3.98952407634001E-09	93073.	93279.
22489.9686911143	.163107493879541	-5.83512072655888E-05	3.89020419465527E-09	93279.	93485.
22521.1266504712	.139560818364 7	-5.59481417117599E-05	3.74168110095744E-09	93485.	93691.
22547.5346728004	.116986539822772	-5.36365758598064E-05	3.64958279515416E-09	93691.	93897.
22569.3896822519	9.535167522612 47E-02	-5.13818658660274E-05	3.51060733451167E-09	93897.	94103.
22586.8823755718	7.462925017368 31E-02	-4.92131005521 85E-05	3.42577508133396E-09	94103.	94309.
22600.1975414678	5.478843654935 48E-02	-4.70966685495174E-05	3.29574877893178E-09	94309.	94515.
22609.5141759999	3.580401468882 1E-02	-4.50572452480332E-05	3.20493353234912E-09	94515.	94721.
22615.0057707056	1.764845024827 3E-02	-4.30809159627312E-05	3.12237882898133E-09	94721.	94927.
22616.8404649682	2.958151307387 23E-04	-4.11573689569298E-05	3.01425974036749E-09	94927.	95133.
22615.18119888	-1.627774182740 51E-02	-3.92961469111636E-05	2.92252492250264E-09	95133.	95339.
22610.1859609484	-3.209655149513 99E-02	-3.74870298066043E-05	2.81793039500382E-09	95339.	95545.
22602.0079055726	-4.718233814236 94E-02	-3.57455216891806E-05	2.75866850001 36E-09	95545.	95751.
22590.7955627292	-6.155945627393 69E-02	-3.40411457367428E-05	2.65011676607 24E-09	95751.	95957.
22576.6929115094	-7.524697404002 05E-02	-3.24026681739408E-05	2.59250419028511E-09	95957.	96163.
22559.839649938	-8.826777065546 64E-02	-3.08023656165516E-05	2.50369210995246E-09	96163.	96301.

FILE OF STEERING COEFFICIENTS
START TIME: 76400.0 (SECONDS SINCE MIDNIGHT)
END TIME: 96701.0
DAY: 24 MONTH: 1 YEAR: 1986
STATION: DSS42 FREQUENCY BAND: S
THE FIRST FOUR NUMBERS ARE COEFFICIENTS C0,C1,C2,
THE FIFTH AND SIXTH NUMBERS ARE THE TIMES OVER WH
THE COEFFICIENTS ARE VALID. THE TIME USED IN THE
POLYNOMIAL EQUATION SHOULD BE THE TIME SINCE THE
START OF THE VALID INTERVAL.

12500.	0.E+00	0.E+00	76501.	77210.
12148.4253338956	1.26598270233218E-02	3.98896871333033E-05	-3.22156773935317E-08	77210. 77416.
12152.4443935015	2.50036896607606E-02	1.99788959803609E-05	-3.00332874041063E-08	77416. 77622.
12158.180432529	2.94229395252091E-02	1.41281594247842E-06	-2.76800981307266E-08	77622. 77828.
12164.0595380039	2.64919880103 12E-02	-1.56980931872517E-05	-2.52553086212621E-08	77828. 78034.
12168.6299459905	1.68200252618046E-02	-3.12988650494606E-05	-2.28005480551488E-08	78034. 78240.
12170.5673543614	1.03468291004798E-03	-4.53835701015O5E-05	-2.03036684742681E-08	78240. 78446.
12168.6771109261	-2.023656669172 49E-02	-5.79345312475544E-05	-1.78814509364959E-08	78446. 78652.
12161.8935520657	-4.63717756468O4E-02	-6.8980272686819E-05	-1.55874995790158E-08	78652. 78858.
12149.2774563775	-7.67680296951554E-02	-7.85506289707031E-05	-1.35942142402421E-08	78858. 79015.
12135.2360731073	.12126341733604	-8.50066797916784E-05	-1.17731618789392E-08	79015. 79221.
12156.5060748	8.47511669936 58E-02	-9.22682752426972E-05	-9.80618834898586E-09	79221. 79427.
12169.9635947783	4.54977633996129E-02	-9.83232888934821E-05	-7.95274072057863E-09	79427. 79633.
12175.0941655551	3.98320980409698E-03	-1.03236595323971E-04	-6.31259813358838E-09	79633. 79839.
12171.4785750442	-3.93475019908976E-02	-1.07125295173587E-04	-4.8227914345886E-09	79839. 80045.
12158.7848606527	-8.40915103908753E-02	-1.10073932446599E-04	-3.53195031955957E-09	80045. 80225.
12140.0613950369	.133073538579137	-1.1199654912110 4E-04	-2.37465022124882E-09	80225. 80431.
12162.7010996703	8.66332666217604E-02	-1.13458452561033E-04	-1.30345328311O7E-09	80431. 80637.
12175.7214351528	3.97269623924696E-02	-1.14255736752248E-04	-3.45003340905604E-10	80637. 80843.
12179.0536170051	-7.38578320228 68E-03	-1.14468002361512E-04	5.10071683918062E-10	80843. 81049.
12172.67904047	-5.44785624302169E-02	-1.14152133494816E-04	1.21457023505429E-09	81049. 81255.
12156.6229142219	-.101352951342677	-1.13371615108938E-04	1.70760807889091E-09	81255. 81365.
12144.1045658578	.135083346144979	-1.12831774269 67E-04	2.11870740287809E-09	81365. 81571.
12167.162127341	8.88689273140162E-02	-1.11520669175146E-04	2.61386277482199E-09	81571. 81777.
12180.759485158	4.32569934061365E-02	-1.09905223949313E-04	3.00279469884146E-09	81777. 81983.
12185.0327375949	-1.64020087987565E-03	-1.08045589147638E-04	3.33045925999308E-09	81983. 82189.
12180.1389478546	-4.572958622321E-02	-1.05987161108952E-04	3.60593562520231E-09	82189. 82395.
12166.2525043496	-8.8936648643313E-02	-1.03754654359714E-04	3.78928380230126E-09	82395. 82565.
12148.1533813205	.113175692024491	-1.01820536544996E-04	3.93404598237015E-09	82565. 82771.
12167.1811082948	7.17273108654928E-02	-9.93824338743144E-05	4.06312056905794E-09	82771. 82977.
12177.7750604216	3.12999016586592E-02	-9.68705086484O9E-05	4.16776833086919E-09	82977. 83183.
12180.1484772403	-8.08027431903074E-03	-9.42940062443288E-05	4.20572875546496E-09	83183. 83389.
12174.5192459885	-4.63932061707004E-02	-9.17068450447203E-05	4.35540669607708E-09	83389. 83478.
12169.6669111465	5.96961511172112E-02	-9.05630825801482E-05	4.25338823677687E-09	83478. 83684.
12178.1583656416	2.29252572151393E-02	-8.79347678684959E-05	4.23134288856716E-09	83684. 83890.
12179.1863564396	-1.27649457575919E-02	-8.53207207730438E-05	4.22385296933742E-09	83890. 84080.
12173.7099121333	1.8623701569593	-8.29150329469825E-05	4.17295506923505E-09	84080. 84286.
12553.8760613341	1.82874020676198	-8.03348997376579E-05	4.11623043520883E-09	84286. 84481.
12907.4561884244	1.42991436965866	-7.79279165153948E-05	4.07086920526242E-09	84481. 84687.
13198.7471862983	1.39832576904159	-7.54172833206191E-05	3.98931806817787E-09	84687. 84860.
13438.42103603	.689579521228443	-7.33459143713 43E-05	3.92350948511851E-09	84860. 85066.
13577.3962087788	.659859879734461	-7.09239780142056E-05	3.83283453606432E-09	85066. 85253.
13698.3349293851	-.157498523445727	-6.87760566738587E-05	3.76319702853282E-09	85253. 85459.
13663.0045499903	-.185356089983286	-6.64544167406531E-05	3.65656826910566E-09	85459. 85613.
13632.8970339381	-1.05628883342376	-6.47641564374317E-05	3.595200324858 61E-09	85613. 85819.
13412.5846310899	-1.082514437657 49	-6.25490364017308E-05	3.49806606568684E-09	85819. 85962.
13256.5162303288	-1.88561898965095	-6.10432488851671E-05	3.41620600758683E-09	85962. 86168.
12865.5181509953	-1.9103344235258	-5.89300404121413E-05	3.31707924023622E-09	86168. 86374.
12469.5175018505	-1.93419190434502	-5.68897551482038E-05	3.60726359445604E-09	86374. 86412.
12395.9362586167	-2.17160102732575	-5.65081707915459E-05	3.20431608276836E-09	86412. 86618.
11946.2164777935	-2.19447480797382	-5.45295741804985E-05	3.10814841121463E-09	86618. 86824.
11491.8678212025	-2.21655096765606	-5.01573085764908E-05	-2.59838998317717E-07	86824. 86829.
11480.7837799516	-1.53163169823359	-5.25639967390193E-05	3.01031877370837E-09	86829. 87035.

STEER1 coefficients for Canberra data (DSS 42 and 43). These are stored in card image format (ASCII characters) with 100 cards per physical record, in File 114 of Tape 14. Note that three separate sets of coefficients are included here: 42S, 43S, and 43X.

```
11163.063600027  -1.55290519508222  -5.07111102343956E-05  2.93675518724961E-09  87035.  87170.
10952.5041742016  -.738931876419407  -4.95188702023659E-05  2.84762325870967E-09  87170.  87376.
10798.2077182819  -.758970915634206  -4.77723796943761E-05  2.83930644655962E-09  87376.  87485.
10714.9159818188  9.84955493096981E-02  -4.68511027786766E-05  2.71631979299176E-09  87485.  87691.
10733.2416371469  7.95381074157412E-02  -4.51752259857631E-05  2.62906989232422E-09  87691.  87845.
10744.4287320868  .813890836217114  -4.39568884320154E-05  2.55315542861429E-09  87845.  88051.
10910.247209045  .796105102642252  -4.23760838710725E-05  2.46548901098597E-09  88051.  88257.
11072.4681415454  .778961987030316  -4.12064326249444E-05  1.53433859104031E-08  88257.  88276.
11087.2536492915  1.35336472923963  -4.07108389896798E-05  2.3775831522246 4E-09  88276.  88482.
11364.3399627459  1.3368939127689  -3.9236920474409E-05  2.2900293109916E-09  88482.  88688.
11638.0950698339  1.32102017898688  -3.7823837261312E-05  2.19313637707321E-09  88688.  88745.
11713.2707365424  1.46657985819843  -3.7432270711763 9E-05  2.20066153900702E-09  88745.  88951.
12013.8169492696  1.45143760507188  -3.6069773761842 4E-05  2.11774995071796E-09  88951.  89060.
12171.597845788  3.94696544433268E-02  -3.5367347694842 3E-05  2.08336226500496E-09  89060.  89266.
12178.2459582061  2.51633478803903E-02  -3.4078275726398 6E-05  2.02372244633903E-09  89266.  89472.
12182.00115317  1.13801472220102E-02  -3.2827774157936 9E-05  1.94660301083235E-09  89472.  89678.
12182.9694009189  -1.8972046832122 2E-03  -3.1622624589907 5E-05  1.88541989451331E-09  89678.  89884.
12181.2531210509  -1.46859568645333E-02  -3.046267623269 47E-05  1.86289743492188E-09  89884.  89969.
12179.7858659335  4.80354036907673E-02  -2.9986485997392 7E-05  1.79220093447323E-09  89969.  90175.
12188.4243196648  3.59090114386679E-02  -2.8878616257571 8E-05  1.74016256937521E-09  90175.  90381.
12194.6112952427  2.42323078622134E-02  -2.7805869748080 2E-05  1.68214578111753E-09  90381.  90587.
12198.4378857825  1.29902976339069E-02  -2.6768869310677 8E-05  1.62653251103998E-09  90587.  90793.
12199.992142205  2.16815100264359E-03  -2.5763720692293 3E-05  1.56407900232775E-09  90793.  90999.
12199.3591449511  -8.2474868127558E-03  -2.4796615783551 4E-05  1.51732117244231E-09  90999.  91205.
12196.6211576228  -1.82706602993532E-02  -2.3860702282993 7E-05  1.47028497173272E-09  91205.  91411.
12191.8577017997  -2.79143936440962E-02  -2.2953969183279 E-05  1.41794359353361E-09  91411.  91617.
12185.1456562978  -3.71912632706439E-02  -2.2076484961521 9E-05  1.36730334043761E-09  91617.  91823.
12176.5593710624  -4.61131508559639E-02  -2.1229129027922 2E-05  1.32176866055203E-09  91823.  92029.
12166.1707373251  -5.46918132453991E-02  -2.0404800229756 E-05  1.23630238953 36E-09  92029.  92109.
12161.6654345308  5.37569227510738E-02  -2.0098119442715 9E-05  1.25724527937533E-09  92109.  92315.
12171.8974674278  4.56365120136898E-02  -1.9319140179811 6E-05  1.22842322332 06E-09  92315.  92521.
12180.4895005197  3.78328575789285E-02  -1.8559570158934 8E-05  1.17975395962491E-09  92521.  92727.
12187.5057884537  3.03365572102196E-02  -1.7830118206326 8E-05  1.14928693416923E-09  92727.  92933.
12193.0085271977  2.31367680679715E-02  -1.7120167977898 6E-05  1.11021069656361E-09  92933.  93139.
12197.0578952291  1.62243944267718E-02  -1.6433786224311 9E-05  1.07624093216302E-09  93139.  93345.
12199.7121446289  9.59031798569877E-03  -1.5768766684748 8E-05  1.03978217092995E-09  93345.  93551.
12201.0276763354  3.22598260035694E-03  -1.5128611897984 5E-05  1.01501067432 1E-09  93551.  93757.
12201.0591040131  -2.87784812641215E-03  -1.4504754940705 4E-05  9.80872453540426E-10  93757.  93963.
12199.8593181249  -8.7294492220437E-03  -1.3896331093424 8E-05  9.35499163746774E-10  93963.  94169.
12197.4795248405  -1.43357102774807E-02  -1.3314714197123 8E-05  9.15247114278676E-10  94169.  94375.
12193.9693462335  -1.97048773984615E-02  -1.2750578660064 6E-05  8.92011910712141E-10  94375.  94581.
12189.3768557374  -2.48445518864278E-02  -1.2201945493320 4E-05  8.64019804795516E-10  94581.  94787.
12183.748629392  -2.97620278568508E-02  -1.1666455823103 2E-05  8.26786521993586E-10  94787.  94993.
12177.1298015498  -3.44634327330 97E-02  -1.1153248923392 8E-05  8.09578024656791E-10  94993.  95199.
12169.5641123176  -3.89559408293502E-02  -1.0651604739420 3E-05  7.75486901202273E-10  95199.  95390.
12161.7403499194  3.68001079119 89E-02  -1.0203541868481 9E-05  7.57182691837 44E-10  95390.  95586.
12500.  0.E+00  0.E+00  0.E+00  95586.  96659.
FILE OF STEERING COEFFICIENTS
START TIME: 76400.0 (SECONDS SINCE MIDNIGHT)
END TIME:  96701.0
DAY: 24  MONTH:  1  YEAR: 1986
STATION: DSS43  FREQUENCY BAND: S
THE FIRST FOUR NUMBERS ARE COEFFICIENTS C0,C1,C2,
THE FIFTH AND SIXTH NUMBERS ARE THE TIMES OVER WH
THE COEFFICIENTS ARE VALID.  THE TIME USED IN THE
POLYNOMIAL EQUATION SHOULD BE THE TIME SINCE THE
START OF THE VALID INTERVAL.
12500.  0.E+00  0.E+00  0.E+00  76499.  77210.
12148.4037225161  1.26631457376476E-02  3.98896777479525E-05  -3.22153204420199E-08  77210.  77416.
12152.4234684993  2.50070253221841E-02  1.99791801938204E-05  -3.00342487839847E-08  77416.  77622.
12158.1601983298  2.94263330100457E-02  1.41259108779255E-06  -2.76794139658922E-08  77622.  77828.
12164.0399993014  2.64953820458863E-02  -1.5698047590293 6E-05  -2.52554152787696E-08  77828.  78034.
12168.6111074619  1.68234380263076E-02  -3.1298733067807 5E-05  -2.28010705050021E-08  78034.  78240.
```

12170.5492198959	1.0381342429689E-03	-4.53837406172873E-05	-2.0303125087751E-08	78240.	78446.
12168.6596849494	-2.0233138002421E-02	-5.79342184325068E-05	-1.78822120441641E-08	78446.	78652.
12161.8768390202	-4.63682997729448E-02	-6.89804232343337E-05	-1.55867991674533E-08	78652.	78858.
12149.2614590962	-7.67645370304467E-02	-7.85506643342297E-05	-1.3594007424813E-08	78858.	79015.
12135.2206241031	.121266913074844	-8.50066150330328E-05	-1.1773259472966 9E-08	79015.	79221.
12156.4913478129	8.47546872389275E-02	-9.22683913281133E-05	-9.8055675032989 9E-09	79221.	79427.
12169.9495934628	4.55013249450896E-02	-9.83235921325971E-05	-7.95174161642547E-09	79427.	79633.
12175.0808937837	3.986747820090 29E-03	-1.0323644225226 3E-04	-6.3131676135741 1E-09	79633.	79839.
12171.4660336215	-3.93439106246368E-02	-1.07125580337051E-04	-4.8218962803268 5E-09	79839.	80045.
12158.7730547756	-8.40879417490366E-02	-1.100738905369E-04	-3.53176922789756E-09	80045.	80225.
12140.0502339293	.133077070332813	-1.1199587576200 5E-04	-2.3765584274 14E-09	80225.	80431.
12162.6906779975	8.663686291796 32E-02	-1.1345856332589 4E-04	-1.3027684671943E-09	80431.	80637.
12175.7117555298	3.97305632237467E-02	-1.14255785938049E-04	-3.44613804143549E-10	80637.	80843.
12179.0446804714	-7.38218629252478E-03	-1.14467669481243E-04	5.0899617738169 5E-10	80843.	81049.
12172.670849624	-5.44749237258151E-02	-1.1415223470418E-04	1.21494499255604E-09	81049.	81255.
12156.6154719301	-.101349308035194	-1.13372265445673E-04	1.712758317864E-09	81255.	81365.
12144.0975233157	.135086993113302	-1.1283180087117 9E-04	2.1187035902262 3E-09	81365.	81571.
12167.1558349122	8.887260996332 7E-02	-1.1152108834563 8E-04	2.6152210539667 5E-09	81571.	81777.
12180.7539454409	4.32605508965 87E-02	-1.0990394410818 3E-04	2.9988240221155 5E-09	81777.	81983.
12185.0279503212	-1.63656188826927E-03	-1.0804550799768 6E-04	3.3305959308660 4E-09	81983.	82189.
12180.1349148516	-4.57259320299986E-02	-1.0598705092280 7E-04	3.6056632486350 9E-09	82189.	82395.
12166.2492264051	-8.89329961469176E-02	-1.0375437598745 3E-04	3.7881049689079 5E-09	82395.	82565.
12148.1507265539	.113179397515387	-1.0182095531225 8E-04	3.9353903333611 2E-09	82565.	82771.
12167.179210917	7.17309638508 09E-02	-9.9382222426631 4E-05	4.0624733083337 6E-09	82771.	82977.
12177.7739188735	3.13035949951979E-02	-9.6870763347255 5E-05	4.1685961348821 9E-09	82977.	83183.
12180.1480928295	-8.07658199337927E-03	-9.4294167993293 2E-05	4.2061137380027E-09	83183.	83389.
12174.5196186983	-4.63895847649842E-02	-9.17052617603127E-05	4.3456723320583 5E-09	83389.	83478.
12169.66761184	5.96997936856738E-02	-9.0562757078918 4E-05	4.2524634732498 9E-09	83478.	83684.
12178.1598224331	2.29289088051105E-02	-8.7934465430574 5E-05	4.2304057039596 4E-09	83684.	83890.
12179.1885721002	-1.27612662415642E-02	-8.5321010998475 7E-05	4.2250421663017 7E-09	83890.	84080.
12173.7128225815	1.86237385578961	-8.2915391232092 2E-05	4.1740238516999 6E-09	84080.	84286.
12553.8797278803	1.82874391911433	-8.0335773459037 4E-05	4.1194001442393 9E-09	84286.	84481.
12907.460569159	1.42991802194484	-7.79278237701033E-05	4.0705193243703 7E-09	84481.	84687.
13198.7523202811	1.39832945831467	-7.5417725610291 8E-05	3.9907228452488 9E-09	84687.	84860.
13438.4268022932	.689583151835826	-7.3345722526288 9E-05	3.9229784577782 9E-09	84860.	85066.
13577.4027264461	.659863493577892	-7.0923682103204 2E-05	3.8319587329062 7E-09	85066.	85253.
13698.3421274618	-.157494861280016	-6.877636224273E-05	3.7640090466447 7E-09	85253.	85459.
13663.0124966045	-.185352394665602	-6.6455621806546 7E-05	3.6614747000429E-09	85459.	85613.
13632.9055389714	-1.05628518655577	-6.476437551710 21E-05	3.5955962942201 3E-09	85613.	85819.
13412.5938815427	-1.08251079658719	-6.2549451373996 2E-05	3.4997391101442 1E-09	85819.	85962.
13256.5259978612	-1.88561539600966	-6.1043213655460 2E-05	3.4160560385356 5E-09	85962.	86168.
12865.5286590018	-1.91033084642131	-5.8929751022238 1E-05	3.3159681928864 8E-09	86168.	86374.
12469.5287493084	-1.93418806085889	-5.6908549814880 9E-05	3.9193597635875 9E-09	86374.	86412.
12395.9476421129	-2.17159740931676	-5.6508650514997 7E-05	3.2056160825702 6E-09	86412.	86618.
11946.2285976064	-2.19447121778755	-5.4529806091887 9E-05	3.1085156294309 3E-09	86618.	86824.
11491.8806739625	-2.21654602889902	-5.0739012658595 8E-05	-1.9124709069728 7E-07	86824.	86829.
11480.7966514368	-1.53162814624553	-5.2563948381924 9E-05	3.0098670007626 7E-09	86829.	87035.
11163.0769613002	-1.55290167698016	-5.0710725288069 1E-05	2.9348542151508 4E-09	87035.	87170.
10952.5182527815	-.738928334917926	-4.9519068634507 5E-05	2.848110345562E-09	87170.	87376.
10798.2225222484	-.758967479170053	-4.7770227638497 7E-05	2.8259672951558 6E-09	87376.	87485.
10714.9311686539	9.84990724798748E-02	-4.6851478224601 7E-05	2.7175631192542 5E-09	87485.	87691.
10733.2575446915	7.95416109372772E-02	-4.5175565836313E-05	2.6299641980672 9E-09	87691.	87845.
10744.4451743801	.813894368723907	-4.3957704213315 1E-05	2.5556029202095 5E-09	87845.	88051.
10910.2643658117	.796108524141617	-4.2375686640886 8E-05	2.4641883981233 5E-09	88051.	88257.
11072.4860086281	.778965565544403	-4.1228062707494 8E-05	1.5977110784821 8E-08	88257.	88276.
11087.2715806299	1.35336818515289	-4.0711068927604 2E-05	2.3780098222727 3E-09	88276.	88482.
11364.3585999746	1.33689729943504	-3.9236490739694 3E-05	2.2883197796130 5E-09	88482.	88688.
11638.1144080077	1.32102354998254	-3.7823419325854 5E-05	2.1988391851323 5E-09	88688.	88745.
11713.2902692769	1.4665832029331	-3.7431963304245 1E-05	2.1996493358629 5E-09	88745.	88951.
12013.8371769645	1.45144093054274	-3.6068804818031 6E-05	2.1115329392007 3E-09	88951.	89060.
12171.61843942	3.947300356403 96E-02	-3.5367398971445 6E-05	2.0836240990730 5E-09	89060.	89266.
12178.2672418699	2.516664341475 86E-02	-3.4078045260611 3E-05	2.0231659858488 E-09	89266.	89472.
12182.0231206295	1.13833973682004E-02	-3.282717900836 93E-05	1.9446880525417 8E-09	89472.	89676.

```
12182.99[illegible]  3424  -1.89388981710331E-03  -3.1622972541721E-05  1.885[illegible]3666014683E-09  89678.  89884.
12181.2764391702  -1.468255254197O9E-02  -3.04665610215 61E-05  1.889286985382343E-09  89884.  89969.
12179.8094615609  4.803865604193 69E-02  -2.99865447047344E-05  1.792013941876 35E-09  89969.  90175.
12188.4485811506  3.591226061125 54E-02  -2.88789079915949E-05  1.740731027455 55E-09  90175.  90381.
12194.6362186473  2.423547807963 39E-02  -2.78057132111519E-05  1.681627839694 61E-09  90381.  90587.
12198.4634643671  1.299349369416 95E-02  -2.67692389057033E-05  1.627363232454 69E-09  90587.  90793.
12200.0183707558  2.171260360258 75E-03  -2.57635654219501E-05  1.563572709471 13E-09  90793.  90999.
12199.3860161927  -8.24437573830753E-03  -2.47967001753486E-05  1.517462252319 29E-09  90999.  91205.
12196.6486673978  -1.826765283481 05E-02  -2.38599242476198E-05  1.467727992819 43E-09  91205.  91411.
12191.8858417765  -2.791134982703 82E-02  -2.29539561927981E-05  1.417514672158 21E-09  91411.  91617.
12185.1744212795  -3.718827232599 5E-02  -2.20759964283199E-05  1.365112347843 35E-09  91617.  91823.
12176.5887537569  -4.611012127401 91E-02  -2.12295015699694E-05  1.322285286328 49E-09  91823.  92029.
12166.2007328205  -5.468885564652 72E-02  -2.04040355039109E-05  1.225852356329 55E-09  92029.  92109.
12161.695666178  5.3759879885519E-02  -2.00983819137912E-05  1.257682569070 85E-09  92109.  92315.
12171.9283009291  4.563940377760 24E-02  -1.93189836523887E-05  1.227772514439 26E-09  92315.  92521.
12180.5209306784  3.783571994058 18E-02  -1.85596551230056E-05  1.179896431677 6E-09  92521.  92727.
12187.5378058989  3.033939846827 82E-02  -1.78302304142022E-05  1.149435723924 26E-09  92727.  92933.
12193.0411264811  2.313954891985 78E-02  -1.71199362569854E-05  1.109248530144 16E-09  92933.  93139.
12197.0910687902  1.622713150307 05E-02  -1.64335210782257E-05  1.075137469460 08E-09  93139.  93345.
12199.7458836332  9.593062064638 52E-03  -1.57690662837453E-05  1.040511222018E-09  93345.  93551.
12201.0619742785  3.228688540016 17E-03  -1.51288272111683E-05  1.015337508090 4E-09  93551.  93757.
12201.0939530999  -2.875163550974 61E-03  -1.45053088170251E-05  9.824813804578 69E-10  93757.  93963.
12199.8947107949  -8.726832640494 74E-03  -1.38964475596876E-05  9.355169567409 9E-10  93963.  94169.
12197.5154517394  -1.433310918476 84E-02  -1.33150420589489E-05  9.159120421669 85E-10  94169.  94375.
12194.0058008571  -1.970237496532 67E-02  -1.27502073087711E-05  8.905086841683 65E-10  94375.  94581.
12189.4138284799  -2.484206472770 97E-02  -1.22018640573109E-05  8.634190112687 65E-10  94581.  94787.
12183.786112693  -2.97595617018921E-02  -1.16666996015264E-05  8.272468674754 64E-10  94787.  94993.
12177.167786558  -3.446101723172 41E-02  -1.11532418890796E-05  8.090940035206 36E-10  94993.  95199.
12169.6025909864  -3.895357994426 82E-02  -1.06514852443326E-05  7.748348909109 71E-10  95199.  95390.
12161.7792793334  3.680238268203 29E-02  -1.02027544395443E-05  7.540907535497 87E-10  95390.  95586.
12500.  0.E+00  0.E+00  0.E+00  95586.  96657.
12500.  0.E+00  0.E+00  0.E+00  96657.  96662.
FILE OF STEERING COEFFICIENTS
START TIME: 76400.0 (SECONDS SINCE MIDNIGHT)
END TIME:  96701.0
DAY: 24  MONTH:  1  YEAR: 1986
STATION: DSS43  FREQUENCY BAND: X
THE FIRST FOUR NUMBERS ARE COEFFICIENTS C0,C1,C2,C3,
THE FIFTH AND SIXTH NUMBERS ARE THE TIMES OVER WHICH
THE COEFFICIENTS ARE VALID.  THE TIME USED IN THE
POLYNOMIAL EQUATION SHOULD BE THE TIME SINCE THE
START OF THE VALID INTERVAL.
12500.  0.  0.  0.  76499.  77210.
11210.8136492259  4.643153437137 49E-02  1.46262151742493E-04  -1.18122841620 74E-07  77210.  77416.
11225.5527178309  9.169242618134 22E-02  7.32569940440084E-05  -1.10125578874 611E-07  77416.  77622.
11246.5873938761  .1078965543701 68  5.17950065523937E-06  -1.01491184541 605E-07  77622.  77828.
11268.1466641053  9.714973416825 03E-02  -5.75595078310768E-05  -9.26031893554 891E-08  77828.  78034.
11284.9073940273  6.168593942979 49E-02  -1.14762021248628E-04  -8.36039251850 082E-08  78034.  78240.
11292.0138062853  3.806492224219 32E-03  -1.66407048930054E-04  -7.44447919884 207E-08  78240.  78446.
11285.0855114813  -7.418817267554 39E-02  -2.12425467585859E-04  -6.55681108286 021E-08  78446.  78652.
11260.2150764074  -.170017099167465  -2.52928218525891E-04  -5.71515969473 292E-08  78652.  78858.
11213.9586833529  -.281469969111639  -2.88019102558843E-04  -4.98446938909 812E-08  78858.  79015.
11162.4756217114  .4446453479410 98  -3.11690921787788E-04  -4.31686180675 454E-08  79015.  79221.
11240.4682753142  .3107671865427 35  -3.38317434869 75E-04  -3.59537475120 964E-08  79221.  79427.
11289.8151760306  .1668381914653 29  -3.60519837819524E-04  -2.91563859268 935E-08  79427.  79633.
11308.6299438737  1.461807534033 11E-02  -3.78533621591635E-04  -2.31482812497 718E-08  79633.  79839.
11295.3754566125  -.144261005623669  -3.92793794569189E-04  -1.76802863611 985E-08  79839.  80045.
11248.8345341775  -.308322453079802  -4.03604265301969E-04  -1.29498205022 911E-08  80045.  80225.
11180.1841910742  .4879492578869 85  -4.10651544460689E-04  -8.71404756718 47E-09  80225.  80431.
11263.1991526577  .3176684973658 66  -4.16014732194947E-04  -4.77684843797 127E-09  80431.  80637.
11310.9431036096  .1456787318204 05  -4.18937881772848E-04  -1.26358394852 635E-09  80637.  80843.
11323.1638283953  -2.706801640592 43E-02  -4.19714788097895E-04  1.866319317066 22E-09  80843.  81049.
11299.793115288  -.199741386994656  -4.18558193915331E-04  4.454798306038 85E-09  81049.  81255.
```

11240.923[illegible]70772	-.371614129462381	-4.156983066341 37E-04	6.28011[illegible]83216803E-09	81255. 81365.
11195.0242521576	.495318974748777	-4.13716603194326E-04	7.76857983082953E-09	81365. 81571.
11279.5713946782	.3258662365322	-4.08910657267342E-04	9.5891438645448E-09	81571. 81777.
11329.4311332833	.158622019954153	-4.02981128396672E-04	1.09956880810904E-08	81777. 81983.
11345.1024845112	-6.00072692365404E-03	-3.961668626581 85E-04	1.22121850798422E-08	81983. 82189.
11327.1613544561	-.167661750776662	-3.886191867169 61E-04	1.322076524499 54E-08	82189. 82395.
11276.2471634857	-.326087652538699	-3.804327119539 96E-04	1.388971821932 92E-08	82395. 82565.
11209.8859973643	.414991124223088	-3.733434962116 16E-04	1.442976455565 75E-08	82565. 82771.
11279.6571066957	.263013534119634	-3.644014822309 83E-04	1.489573546389 05E-08	82771. 82977.
11318.504369203	.114779848315726	-3.551927989399 38E-04	1.528485249456 81E-08	82977. 83183.
11327.2096737083	-2.961413397572 41E-02	-3.457452826420 76E-04	1.542241703934 33E-08	83183. 83389.
11306.5719352271	-.170095144138276	-3.362526264544 81E-04	1.593413188421 4E-08	83389. 83478.
11288.7812434136	.218899243514138	-3.320634426227 02E-04	1.559236606858 3E-08	83478. 83684.
11319.9193489216	8.407266561873 9E-02	-3.224263732454 41E-04	1.551148758118 54E-08	83684. 83890.
11323.6914310343	-4.679130955240 23E-02	-3.128437069944 12E-04	1.549182127643 99E-08	83890. 84080.
11303.613682799	6.82870413789528	-3.040231011843 39E-04	1.530475412289 99E-08	84080. 84286.
12697.559002228	6.70539437008591	-2.945645026831 38E-04	1.510446719554 45E-08	84286. 84481.
13994.0220869164	5.24303274713111	-2.857353538237 13E-04	1.492523752269 14E-08	84481. 84687.
15062.0918410308	5.127208013820 48	-2.765316605710 71E-04	1.463265043257 93E-08	84687. 84860.
15940.8982750754	2.528471556731 37	-2.689343159297 27E-04	1.438425434518 71E-08	84860. 85066.
16450.476663636	2.41949947645228	-2.600535010450 83E-04	1.405051535398 97E-08	85066. 85253.
16893.9211340267	-.57748115802673	-2.521799948900 11E-04	1.380136650436 42E-08	85253. 85459.
16764.3791542165	-.679625447107212	-2.436706132906 72E-04	1.342540723349 07E-08	85459. 85613.
16653.9869762286	-3.87304568403784	-2.374693768960 42E-04	1.318385307880 72E-08	85613. 85819.
15846.1775656566	-3.96920625415306	-2.293479883713 2E-04	1.283237673719 55E-08	85819. 85962.
15273.9286588244	-6.91392311870212	-2.238251167366 88E-04	1.252553880796 41E-08	85962. 86168.
13840.2717496734	-7.00454643687816	-2.160757537482 07E-04	1.215855004058 38E-08	86168. 86374.
12388.2720807977	-7.09202288981597	-2.086646826545 64E-04	1.437098579982 12E-08	86374. 86412.
12118.4746877476	-7.9625238341615	-2.071983852216 59E-04	1.175392563609 1E-08	86412. 86618.
10469.5048578903	-8.04639446522106	-1.999426223369 23E-04	1.139789064124 68E-08	86618. 86824.
8803.56247119605	-8.12733543929643	-1.860430464148 52E-04	-7.012393325567 24E-07	86824. 86829.
8762.92105526849	-5.61596986956697	-1.927344774003 92E-04	1.103617900279 65E-08	86829. 87035.
7597.94885810092	-5.69397281559394	-1.859393260562 54E-04	1.076113212221 98E-08	87035. 87170.
6825.90026019886	-2.70940389469907	-1.815699183265 28E-04	1.044307126706 07E-08	87170. 87376.
6260.14924824424	-2.78288075695687	-1.751575013411 59E-04	1.036188008223 82E-08	87376. 87485.
5954.74761839769	.361163265759542	-1.717887534902 07E-04	9.964398103932 28E-09	87485. 87691.
6021.94433053582	.291652573436684	-1.656437413998 15E-04	9.643202059580 11E-09	87691. 87845.
6062.96563939377	2.98427935198767	-1.611782487821 56E-04	9.370544040768 39E-09	87845. 88051.
6670.96934130974	2.91906458851927	-1.553775176832 52E-04	9.035357459785 64E-09	88051. 88257.
7265.78203163668	2.85620707366282	-1.511695632608 15E-04	5.858273954434 68E-08	88257. 88276.
7319.99579564295	4.9623500122273	-1.492739194012 16E-04	8.719369348333 9E-09	88276. 88482.
8335.98153324052	4.90195676459518	-1.438671327122 13E-04	8.390505858581 23E-09	88482. 88688.
9339.7528293617	4.84375301660267	-1.386858708614 67E-04	8.062410345485 31E-09	88688. 88745.
9615.39765401557	5.37747174408807	-1.372505321155 66E-04	8.066114231497 52E-09	88745. 88951.
10717.4029822032	5.32195007865674	-1.322522843327 83E-04	7.742287443736 06E-09	88951. 89060.
11295.9342778734	.144734346401479	-1.296804628953 01E-04	7.639955029934 57E-09	89060. 89266.
11320.3132201898	9.227769252078 18E-02	-1.249528326222 42E-04	7.418275281445 63E-09	89266. 89472.
11334.0847756415	4.173912368340 19E-02	-1.203663230306 88E-04	7.130522859319 88E-09	89472. 89678.
11337.637503555	-6.944262662712 18E-03	-1.159508993196 44E-04	6.915101087205 07E-09	89678. 89884.
11331.3469436243	-5.383602598722 68E-02	-1.117107237457 24E-04	6.927396130685 93E-09	89884. 89969.
11325.9680257234	.176141738820436	-1.099506639173 6E-04	6.57071778688E-09	89969. 90175.
11357.6447975523	.131678288907937	-1.058893293025 15E-04	6.3826804340037E-09	90175. 90381.
11380.332801707	8.886341962532 46E-02	-1.019542817742 24E-04	6.165968745546 93E-09	90381. 90587.
11394.3660360127	4.764281021195 53E-02	-9.815387598757 91E-05	5.966998519000 55E-09	90587. 90793.
11400.0673594381	7.961287987615 45E-03	-9.446640654715 09E-05	5.733099934727 5E-09	90793. 90999.
11397.7487260401	-3.022937770712 77E-02	-9.092123397627 86E-05	5.564028258504 08E-09	90999. 91205.
11387.7117804586	-6.698139372763 89E-02	-8.748638890793 98E-05	5.381669370046 E-09	91205. 91411.
11370.2480865139	-.102341616032474	-8.416450604026 02E-05	5.197553797913 48E-09	91411. 91617.
11345.6395446918	-.136356998528649	-8.094532023717 33E-05	5.005411942092 31E-09	91617. 91823.
11314.1587637756	-.169070444671404	-7.784150575655 48E-05	4.848379383204 51E-09	91823. 92029.
11276.0693536754	-.200525804037267	-7.481479684767 36E-05	4.494791973208 38E-09	92029. 92109.
11259.5507759861	.197119559580237	-7.369406701723 47E-05	4.611502753259 82E-09	92109. 92315.
11297.0704367402	.167344480517876	-7.083627339209 21E-05	4.501832552943 99E-09	92315. 92521.

11328.576	58211	.138730973115467	-6.80520687843543E-05	4.326286	.615197E-09	92521.	92727.
11354.3052882961	.111244461050354	-6.537751151874 18E-05	4.21459765438899E-09	92727.	92933.
11374.4841304309	8.48450127061457E-02	-6.277309960894 68E-05	4.06724461052862E-09	92933.	93139.
11389.3339188974	5.94994821779256E-02	-6.025624395349 47E-05	3.942170721427E-09	93139.	93345.
11399.0682399887	3.51745609036747E-02	-5.781990970706 63E-05	3.815207448073 3E-09	93345.	93551.
11403.893905688	1.1838524646726E-02	-5.547236644095 06E-05	3.7229041963315E-09	93551.	93757.
11404.0111613664	-1.05422663535736E-02	-5.318613232909 23E-05	3.602431728345 53E-09	93757.	93963.
11399.6139395814	-3.19983863484808E-02	-5.095364105218 83E-05	3.430228841383 64E-09	93963.	94169.
11390.8899897113	-5.25547336774843E-02	-4.882182088281 31E-05	3.358344154612 29E-09	94169.	94375.
11378.0212698094	-7.22420415395317E-02	-4.675076013216 11E-05	3.265198508617 35E-09	94375.	94581.
11361.1840377599	-9.10875706682692E-02	-4.474016821014 04E-05	3.165869707985 48E-09	94581.	94787.
11340.5490798745	-.109118392906938	-4.277789853893 03E-05	3.033238514076 71E-09	94787.	94993.
11316.2818840462	-.126357063182989	-4.089522025995 87E-05	2.966678012909 01E-09	94993.	95199.
11288.5428336169	-.142829793128984	-3.905544589588 66E-05	2.841061266673 57E-09	95199.	95390.
11259.857357556	.134942069834121	-3.741009961166 28E-05	2.764999429682 56E-09	95390.	95586.
12500.	0.	0.	0.	95586.	96657.
12500.	0.	0.	0.	96657.	96662.

FILE OF STEERING COEFFICIENTS
START TIME: 83220.0 (SECONDS SINCE MIDNIGHT)
END TIME: 90000.0
DAY: 24 MONTH: 1 YEAR: 1986
STATION: DSS43 FREQUENCY BAND: S
THE FIRST FOUR NUMBERS ARE COEFFICIENTS C0,C1,C2,C3.
THE FIFTH AND SIXTH NUMBERS ARE THE TIMES OVER WHICH
THE COEFFICIENTS ARE VALID. THE TIME USED IN THE
POLYNOMIAL EQUATION SHOULD BE THE TIME SINCE THE
START OF THE VALID INTERVAL.

12179.7964571426	-1.5092240895113010-02	-9.3660066532199370-05	4.5434782088379020-09	83220. 83478.
12169.7462978005	5.9830551933842180-02	-8.9197804123591380-05	1.7885157101923560-09	83478. 83778.
12179.7159509337	6.7947687014394020-03	-8.7992235381120010-05	5.8037122062069380-09	83778. 84040.
12175.5604195134	-3.8117992576218810-02	1.3401093667294910-02	-5.6151305360115150-04	84040. 84080.
12159.5406142348	.245809842561847	-9.747314519793678D-03	7.4784638304595630-05	84080. 84125.
12157.6784954130	-.177131786519166	7.8242902437681240-06	1.3470741498805490-06	84125. 84300.
12134.1395271829	-5.0630847413571810-02	4.9421409714741920-04	3.3616090303435380-07	84300. 84481.
12143.1596389270	-.206670260395099	6.5390278624097180-04	1.5172505336961830-07	84481. 84860.
12167.0187630059	-.328621042342156	7.8593250900497880-04	2.4166278963106190-07	84860. 85253.
12173.9257418936	-.390153543495240	1.1261640731206620-03	6.8842506498205880-08	85253. 85613.
12182.6332460950	-.403276080685497	1.1317180241129270-03	2.9299580737152160-07	85613. 85790.
12148.3337038110	2.4889896797906290-02	1.2354369838380590-03	-3.0205513039551810-07	85790. 85962.
12187.6269419659	-.362346868603756	1.1008367309874660-03	-5.1211834352218490-07	85962. 86190.
12156.1679456749	5.9768800817557630-02	7.3905332135416490-04	-8.0254138096100450-07	86190. 86412.
12197.0794795749	3.6148399968233180-02	1.8323168621811350-04	-9.3133328234051010-07	86412. 86620.
12204.1446961904	-8.5068279465711290-03	-4.1356692886774680-04	-8.2856668548987160-07	86620. 86829.
12176.7374942594	.395496604347335	-9.0416855280689940-04	-6.5299923099511310-07	86829. 87000.
12214.6634870123	2.8987907746790450-02	-1.2111983362023820-03	-2.9650374199257180-07	87000. 87170.
12183.1310765286	.418945326279952	-1.3627679272564950-03	2.6802199607069560-08	87170. 87485.
12180.7159329254	.436162604149121	-1.3482778979423570-03	3.5722903496223730-07	87485. 87845.
12179.6645327010	.352399620969395	-9.8695069502542250-04	4.2578716111666990-07	87845. 88060.
12214.0402878092	-1.2943143323680920-02	-7.6441626893074630-04	2.7843130927414360-07	88060. 88276.
12178.3859094998	.271729047449266	-5.9852376338665280-04	2.3211235206202300-07	88276. 88745.
12198.1200541540	1.3329661699238290-02	-3.5623556035932210-04	4.9062784195591000-07	88745. 88880.
12194.6342938725	-5.6028862338839180-02	-2.9720181084963950-04	1.3444724003365230-06	88880. 89015.
12184.9618007360	-6.2764322779842530-02	1.7671082043995030-03	3.7983573916634340-06	89015. 89060.
12186.0619256421	-1.28479847232044	4.0581189498462810-02	-4.0146813143174040-04	89060. 89100.
12173.9059295352	3.4649656684230540-02	-3.3766163369606450-05	-1.3546344499488280-09	89100. 89400.
12181.2252967070	1.4024207360980340-02	-3.4595983254170880-05	3.8817422116665020-09	89400. 89700.
12182.4237274622	-5.6853121943722300-03	-3.0628567318875920-05	5.6322814996181720-10	89700. 90000.

FILE OF STEERING COEFFICIENTS
START TIME: 83220.0 (SECONDS SINCE MIDNIGHT)
END TIME: 90000.0
DAY: 24 MONTH: 1 YEAR: 1986
STATION: DSS43 FREQUENCY BAND: X
THE FIRST FOUR NUMBERS ARE COEFFICIENTS C0,C1,C2,C3.
THE FIFTH AND SIXTH NUMBERS ARE THE TIMES OVER WHICH
THE COEFFICIENTS ARE VALID. THE TIME USED IN THE
POLYNOMIAL EQUATION SHOULD BE THE TIME SINCE THE
START OF THE VALID INTERVAL.

11325.5870095228	-5.5338216615414380-02	-3.4342024395139770-04	1.6659420099072310-08	83220. 83478.
11288.7364252686	.219378690424088	-3.2705861511983510-04	6.5578909373719720-09	83478. 83778.
11325.2918200904	2.4914151905277810-02	-3.2263819639744010-04	2.1280278089425440-08	83778. 84040.
11310.0548715492	-.139765972779469	4.9137343446748000-02	-2.0588811972708890-03	84040. 84080.
11251.3155855275	.901302756060104	-3.5740153239243490-02	2.7421034045018400-04	84080. 84125.
11244.4878165143	-.649483217236942	2.8689064227149790-05	4.9392718828953490-06	84125. 84300.
11158.1782663372	-.185646440516430	1.8121183562072040-03	1.2325899777926310-06	84300. 84481.
11191.2520093989	-.757790954782029	2.3976435495502300-03	5.5632519568860060-07	84481. 84860.
11278.7354643549	-1.20494382192124	2.8817525330182560-03	8.8609689531389360-07	84860. 85253.
11304.0610536100	-1.43056299281588	4.1292682681090960-03	2.5242252382675490-07	85253. 85613.
11335.9885690149	-1.47867896251349	4.1496327550807320-03	1.0743179603622460-06	85613. 85790.
11210.2235806403	9.1262954925656410-02	4.5299356074062190-03	-1.1075354781169000-06	85790. 85962.
11354.2987872084	-1.32860518488044	4.0364013469540440-03	-1.8777672595813450-06	85962. 86190.

Empirical STEER1 coefficients used to move DSS43 signal to near the center of the pass-band during atmospheric occultation.

These coefficients are stored in card image format in File 115 of Tape 14

11238.-91341411	.219152269664378	2.709862178298605D-03	-2.942651730190350D-06	86190.	86412.
11388.9580917746	.132544133216855	6.718495161330829D-04	-3.414888701915204D-06	86412.	86620.
11414.8638860313	-3.119170247076081D-02	-1.516412072515072D-03	-3.038077846796196D-06	86620.	86829.
11314.3708122844	1.45015421594023	-3.315284693625298D-03	-2.394330513648748D-06	86829.	87000.
11453.4327857119	.106288995071565	-4.441060566075403D-03	-1.087180387306097D-06	87000.	87170.
11337.8139472716	1.53613286302649	-4.996815733273816D-03	9.827473189258839D-08	87170.	87485.
11328.9584207266	1.59926288188011	-4.943685625788644D-03	1.309839794861537D-06	87485.	87845.
11325.1032865703	1.29213194355445	-3.618819215093216D-03	1.561219590761123D-06	87845.	88060.
11451.1477219671	-4.745819218683005D-02	-2.802859652746070D-03	1.020914800671860D-06	88060.	88276.
11320.4150014993	.996339840647307	-2.194587132417727D-03	8.510786242274179D-07	88276.	88745.
11392.7735318979	4.887542623054042D-02	-1.306197054650848D-03	1.798968753838337D-06	88745.	88880.
11379.9924108657	-.205439161909077	-1.089739973115345D-03	4.929732134567252D-06	88880.	89015.
11344.5266026985	-.230135850192756	6.479396749464845D-03	1.392731043609926D-05	89015.	89060.
11348.5603940210	-4.71092773184162	.148797694827697	-1.472049815249715D-03	89060.	89100.
11303.9884082957	.127048741175512	-1.238092656885570D-04	-4.966992983145704D-09	89100.	89400.
11330.8260879258	5.142209365927920-02	-1.268519385986266D-04	1.423305477611051D-08	89400.	89700.
11335.2203340280	-2.084614471269818D-02	-1.123047468358784D-04	2.065169883193330D-09	89700.	90000.

FILE OF STEERING COEFFICIENTS
START TIME: 82900.0 (SECONDS SINCE MIDNIGHT)
END TIME: 85310.0
DAY: 24 MONTH: 1 YEAR: 1986
STATION: DSS49 FREQUENCY BAND: X
THE FIRST FOUR NUMBERS ARE COEFFICIENTS C0,C1,C2,C3.
THE FIFTH AND SIXTH NUMBERS ARE THE TIMES OVER WHICH
THE COEFFICIENTS ARE VALID. THE TIME USED IN THE
POLYNOMIAL EQUATION SHOULD BE THE TIME SINCE THE
START OF THE VALID INTERVAL.

23392.3793119443	-1.13909925573341	-3.594043603869501D-04	1.668292593567239D-08	82900.	83190.
23032.2215009537	-1.34334468254427	-3.448604128557520D-04	1.648646892529054D-08	83190.	83477.
22618.6655082432	.253309362353250	-3.271363047054885D-04	6.650808616510961D-09	83477.	83778.
22665.4541235122	5.818101665493907D-02	-3.225762489360573D-04	2.116429409417669D-08	83778.	84040.
22658.9352599164	-.106490532376153	5.730823982995173D-02	-2.266482660397972D-03	84040.	84079.
22607.5024770030	.955370794964136	-3.681964179015692D-02	2.767648651656141D-04	84079.	84125.
22600.4783564591	-.675132885658982	2.860752787194520-05	4.939521292529787D-06	84125.	84300.
22509.6789539650	-.211301731832290	1.812255373616622D-03	1.232127988443944D-06	84300.	84480.
22537.5474867690	-2.30156895685355	2.399825711622894D-03	5.489031210173241D-07	84480.	84895.
22034.9383114662	-2.610909615492643D-02	2.958096263699250D-03	9.188658462979055D-07	84895.	85310.

FILE OF STEERING COEFFICIENTS
START TIME: 85330.0 (SECONDS SINCE MIDNIGHT)
END TIME: 90200.0
DAY: 24 MONTH: 1 YEAR: 1986
STATION: DSS49 FREQUENCY BAND: X
THE FIRST FOUR NUMBERS ARE COEFFICIENTS C0,C1,C2,C3.
THE FIFTH AND SIXTH NUMBERS ARE THE TIMES OVER WHICH
THE COEFFICIENTS ARE VALID. THE TIME USED IN THE
POLYNOMIAL EQUATION SHOULD BE THE TIME SINCE THE
START OF THE VALID INTERVAL.

23676.0010145574	-5.29123039899480	4.187417892406398D-03	2.527521156996462D-07	85330.	85613.
22519.6775971938	-2.86042387930997	4.150235070715658D-03	1.072168015666015D-06	85613.	85790.
22149.3507065484	-1.29047080898823	4.530075064649306D-03	-1.108123909667781D-06	85790.	85962.
22055.7688372231	.169526800020299	4.036243771018633D-03	-1.877306195539365D-06	85962.	86190.
22281.9905499790	1.71728430379804	2.709936656922096D-03	-2.942691227731005D-06	86190.	86412.
22764.5880576501	2.48541339606897	6.718981350537501D-04	-3.415130652826767D-06	86412.	86620.
23279.8905847342	2.32166638255963	-1.516209941271773D-03	-3.038612089798463D-06	86620.	86829.
23671.1488027733	1.28970178302457	-3.315174455604364D-03	-2.394527417737269D-06	86829.	87000.
23782.7756490802	-5.4143009458285930-02	-4.440917040387402D-03	-1.087737177316028D-06	87000.	87170.
23639.8847822529	-1.65836161646330	-4.996814886595977D-03	9.822774261602357D-08	87170.	87484.
22629.5343209531	4.84586122228733	-4.947589706099540D-03	1.309814519978060D-06	87484.	87845.
23795.7367621492	1.78579046865765	-3.618903278957752D-03	1.561487950646652D-06	87845.	88060.
24027.9165616522	.446201400261738	-2.802750385473063D-03	1.020541473094674D-06	88060.	88276.
24003.8156488454	-.621743617356510	-2.194616037529462D-03	8.511166496641127D-07	88276.	88745.
23317.2906022119	-2.11865605242884	-1.306275200118279D-03	1.798815154593902D-06	88745.	88880.
23011.8909294478	-2.37300013788336	-1.089849487037498D-03	4.930600508962213D-06	88880.	89015.
22683.8045301595	-2.39767891655597	6.524729882806499D-03	1.321316224423022D-05	89015.	89059.
22592.0640848968	-4.75949064055451	.13950496469742 5	-1.305695343168879D-03	89059.	89100.
22541.4431096017	9.5303926433683450-02	-1.237837672896092D-04	-5.057029727265069D-09	89100.	89400.
22558.7572086731	1.966826803355638D-02	-1.268787893782264D-04	1.431821846503700D-08	89400.	89700.
22553.6251899377	-5.259308660781946D-02	-1.123057465173272D-04	2.046688385611006D-09	89700.	89968.
22531.5033911498	.248432037298717	-1.103354815006341D-04	1.259675942548444D-09	89968.	90200.

Empirical STEER1 coefficients used to move Parkes signal to near the center of the passband during atmospheric occultation. Note break in coefficients at 85310, corresponding to equipment malfunction and loss of data. These coefficients are stored in card image format (ASCII characters, 100 cards per physical record) in [illegible] of Tape 15.

Documentation for First Order Steering

D. L. Gresh
Center for Radar Astronomy
Stanford University
Stanford, CA 94305-4055

July 24, 1987

First order steering removes frequency drift in radio occultation data which results from Doppler and relativistic effects.

A preliminary frequency correction is applied to the data during reception through the POCA (Programmable Oscillator Control Assembly). The reference frequency mixed with the received data is derived from the POCA, which is continuously changed to keep the signal approximately in the center of the passband. POCA frequency may, at most, be a linear function of time; at various times, its rate is changed to match more closely the drift rate of the actual signal.

First order steering removes residual drift after the POCA correction stage. The diagram below shows this process schematically; the diagram on the next page shows the shape of the residual frequency fluctuations following the reception of the data, but *before* steering has been applied.

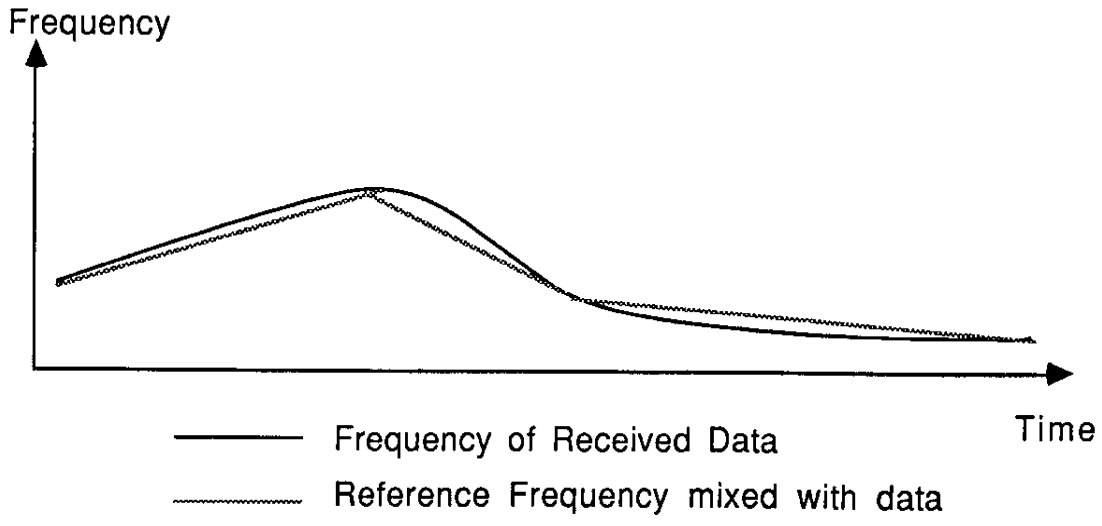

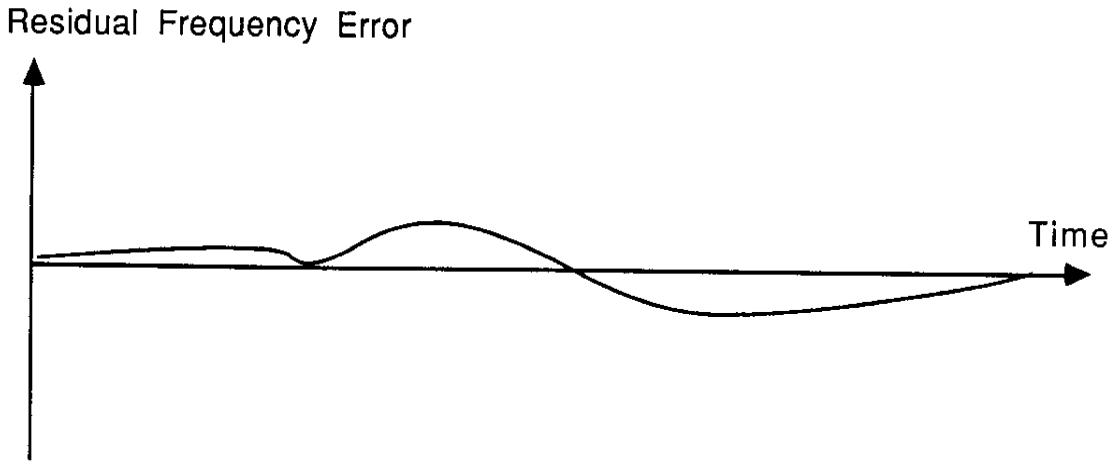

Steering, if properly accomplished, can correct for all known sources of frequency drift. It will thus reduce frequency residuals (such as those shown above) to zero. Perturbations to the propagation path, such as passage through ring material or an atmosphere, then are more easily identified and studied. If desired, even these can be removed if an accurate model for the effects is available.

The frequency of the steering signal is approximated by a polynomial over a short interval of time, typically tens to hundreds of seconds. Polynomial coefficients are changed between intervals, but without introducing discontinuities in frequency.

The first step in computing steering coefficients is calculation of the expected frequency of the received signal. The transmitted signal frequency is controlled by the spacecraft Ultra Stable Oscillator (USO); we have assumed the X-band value f_{USO} = 8420430456.1 Hz for the Uranus encounter period, based on Voyager engineering data. Computation of the expected signal frequency at receiving antennas on earth includes effects due to the relative motion of the spacecraft with respect to earth (Doppler effects) as well as the General and Special Relativity shifts in the signal frequency due to potential wells of the sun and planets and the velocity of the spacecraft . The current position and velocity of the spacecraft relative to other relevant bodies in the solar system are extracted from the CRS (Celestial Reference Set) tape supplied by the Navigation team at JPL (the trajectory used for first order steering was the "final" trajectory of May, 1986). A brief description of how vectors are computed from the CRS tape is given in the accompaning memo by P.A. Rosen entitled "Encounter Geometry Calculations for Ring Occultations". The observed frequency when the classical Doppler shift is taken into account is

$$f_{class}=f_{USO}(1+|V_{relobs}|/c) / (1+|V_{relsrc}|/c)$$

where c is the speed of light and $V_{relobs}=V_{ad}\bullet U_{dds}$ and $V_{relsrc}=V_{as}\bullet U_{dds}$, these vectors being defined in the PAR memo referenced above. The frequency after accounting for the combined effects of Special and General Relativity may be written as

$$f_{REL}=f_{USO}(1 + 2\phi_{src}/c^2 - v_{src}/c^2)^{1/2} / (1 + 2\phi_{obs}/c^2 - v_{obs}/c^2)^{1/2}$$

where ϕ_{src} and ϕ_{obs} are the gravitational potentials at the spacecraft and observing point, respectively, and $V_{src}=V_{as}$ and $V_{obs}=V_{ad}$. (See Gravitation and Cosmology:Principles and Applications of the General Theory of Relativity by Steven Weinberg, John Wiley and Sons, New York, 1972). Thus the observed ratio of observed to emitted frequency is given by

$$f_{obs}/f_{USO}=(f_{class}/f_{USO})(f_{REL}/f_{USO})$$

The second step in calculating steering coefficients is to determine the frequency change applied to the data by the receiving system, including the POCA. The POCA frequency and the rate of frequency change at one-second intervals were stored with the data samples on the original computer tapes generated in Australia. The POCA ramp rate was changed infrequently and then only on even seconds. For Canberra X-band data (DSS 43), the signal recorded on tape is at a frequency of

$$f_{rec}= f_{USO} + f_{DOP} -16.5\, f_{POCA} - 7.7\text{GHz} - 150\text{kHz}$$

where $f_{DOP}=f_{obs}-f_{USO}$, and includes all Doppler and Relativity correction terms. f_{POCA} is the instantaneous POCA frequency; the constant terms result from mixing with fixed frequency local oscillators. A block diagram of the Canberra receiver system is shown below.

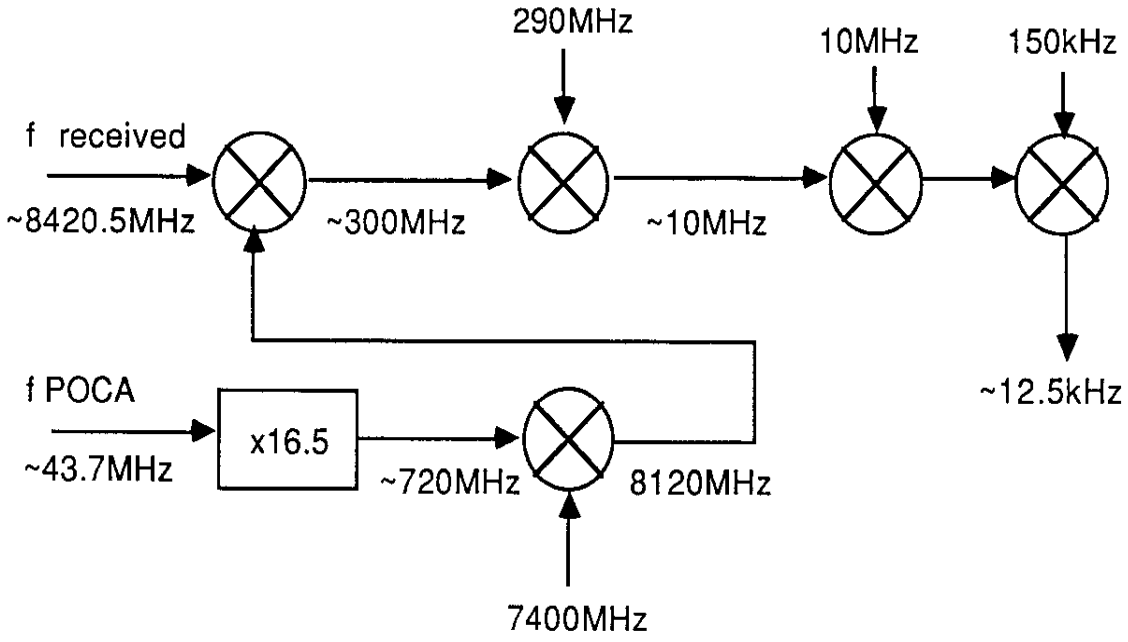

Canberra X-Band Receiver Oscillator System

For Canberra S band data, the signal recorded has a frequency of

$$f_{rec}=(3/11)f_{USO}+f_{DOP}-4.5f_{POCA}-2.1GHz-150kHz$$

The block diagram is shown below.

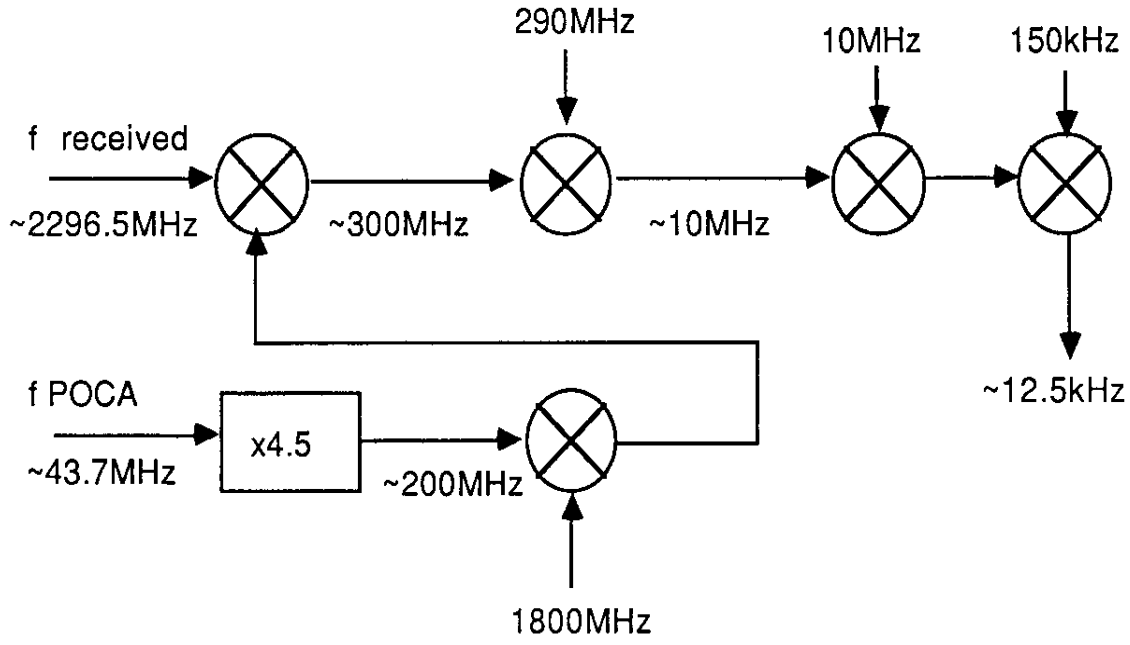

Canberra S-Band Receiver Oscillator System

The mixing system for the Parkes data is slightly different. The signal recorded has a frequency given by the equation

$$f_{rec} = f_{USO} + f_{DOP} - 7f_{POCA} - 8.1\ GHz$$

A block diagram for the Parkes receiving system is shown below.

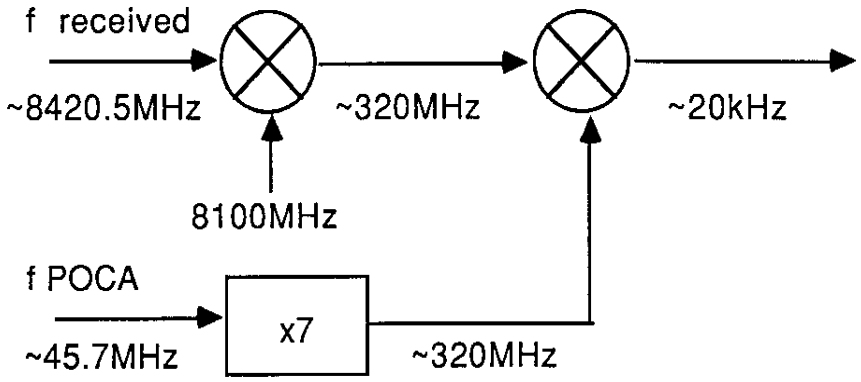

Parkes Receiver Oscillator System

At this stage we have a prediction for the frequency of the recorded signal at all times based on the transmitted frequency, Doppler shifts, and receiving system conversions. Over time intervals during which the POCA ramp rate is constant, we may approximate the recorded frequency by a third order polynomial

$$f_{rec} = C0 + C1*t + C2*(t^2) + C3*(t^3)$$

where t is the time in seconds from the last change in the value of the coefficients.

---

* Note concerning Parkes POCA values: Data acquisition systems at Parkes and Canberra differed in how POCA frequencies and ramp rates were buffered before being written to tape. The Parkes POCA values were "delayed" with respect to Canberra values. So that POCA data from the two systems could be handled in a consistent fashion we created a "corrected" POCA file for Parkes after reading the original data from tape. The corrected file was used for Parkes steering calculations, it has been included in Parkes archival data sets, and it is consistent with the documentation here.

The corrections were as follows:

1) POCA values on Parkes data tapes are always one second late; that is, if the POCA frequency is f_1 at t_1, the frequency f_1 does not appear in the tape record until t_1+1. This was corrected simply by shifting the Parkes POCA values one second earlier.

2) Regardless of the actual POCA rate at the start time, the tape record shows rate=0 until the *next* rate change. This was corrected by substituting the value $f(t_1+1)-f(t_1)$ until correct rate values appeared in the tape record.

3) After corrections 1) and 2) the rate values (but not the POCA values) are *still* delayed by one second. This was corrected by shifting the Parkes POCA rate values an additional one second earlier.

A file of steering coefficients has the following format:

C0	C1	C2	C3	t1	t2
C0	C1	C2	C3	t1	t2
C0	C1	C2	C3	t1	t2

.
.
.

where t1 and t2 are the beginning and end times over which the associated coefficients are valid. Thus each t1 is the same as the previous t2 . The frequency given by the equation above should be continuous at each time interval boundary.

Because the X- and S-band frequencies are related exactly by the factor 11/3, S- band coefficients were computed directly from the X-band coefficients.

The primary source of error in the removal of frequency residuals from the data is drift of the USO. This source of error is much larger than any due to uncertainty in velocities or positions of the spacecraft, planet and receiver. It was assumed that the USO had a constant frequency with the value given above. In fact the USO is continuously drifting in frequency. Following first order steering, typical frequency offsets from the center of the passband were on the order of a few hundreths of a hertz.

ENCOUNTER GEOMETRY CALCULATIONS FOR RING OCCULTATIONS

Processing of radio occultation data requires the use of very precise values of certain distances and angles. These geometric quantities include, among others, the point at which the radio beam intercepts the planet's equatorial (and ring) plane, the distance of the spacecraft from the ring plane measured along the spacecraft- earth line, and the angle of incidence of the radio beam on the ring plane.

To compute these quantities as functions of time, the positions and velocities of the Earth, Sun, occulting planet, and occulted spacecraft must be known to high precision. For Voyager encounters, the JPL Voyager Navigation Team provides this information. The purpose of this document is to describe how the necessary radio occultation geometric parameters are subsequently derived. It is based on existing software and serves to document the software as well as the derivation.

The CRS Tape

The Celestial Reference System (CRS) tape which is provided by the JPL NAV team contains the position and velocity vectors of an arbitrary number of celestial bodies with respect to another body, as a discrete function of time. The number of bodies and the designated reference body depends on the version of the tape. The sampling rate of the vectors can also vary. Usually close to encounter, each time step ranges from 10 seconds to 2 minutes, and time is measured from epoch **1950.0** in **Ephemeris Seconds (ET)**. Since encounter events are logged in **Universal Time (UT)**, the correction factor ΔT must be applied to all encounter event times to reconcile them with body motions (see below). The vectors on the tape are usually given relative to the spacecraft. For occultation calculations, heliocentric or planetocentric calculations are preferred so the reference body is usually changed immediately to be the occulting planet. These vectors are stored in a disk file on a computer.

Symbol Conventions

The symbol $\mathbf{R}_{ab}(t)$ represents a position vector measured *from* point a *to* point b, where both a and b are celestial bodies moving in time with respect to some inertial frame and distance is measured from the center of mass of the bodies. In this representation, the positions of both a and b correspond to time t. For a and b measured each at a different time, the representation $\mathbf{R}_{ab}(t_1, t_2)$ obtains, where a is at time t_1 in its orbit and b at t_2. Velocities are represented similarly with $\mathbf{R}$ replaced by $\mathbf{V}$, unit vectors with $\mathbf{R}$ replaced by $\mathbf{U}$.

Specific letters are used for the subscripts a and b to represent the encounter celestial bodies. They are as follows:

e = Earth

a = Sun

s = Spacecraft

o = Occulting Planet

p = Point of Photon – Ringplane Intersection

d = Receiving Antenna

All vectors are represented in the EME 1950.0 coordinate system unless otherwise stated. Vectors in a planet-date system will have a superscript o as well as subscripts. As an example of the worst possible case, the unit vector which represents the direction from the planet at transmit time t_x to the earth at receive time t_r, in the planet-date coordinate system, would be $\mathrm{U}^o_{oe}(t_x, t_r)$. The cartesian component of this vector along the x-axis of this coordinate system would be $\mathrm{U}^o_{x\ oe}(t_x, t_r)$. Usually the full notation is not required. The matrix which transforms a vector from EME 1950.0 coordinates to planet-date coordinates is notated by T_{eo}. The matrix is easily computed from the planet's rotation pole which is defined in the EME 1950.0 system. Before an encounter, the best possible estimate of the pole is used. After an encounter, refined estimates can be obtained from a variety of methods (*v.*, *e.g.* Simpson *et al.* 1983).

Receive Time Vectors

Events are logged at a receiving station as a function of the receive time t_{ru} in UTC. Ephemeris time, which is used as the time base for the CRS vectors, is given by $t_{re} = t_{ru} + \Delta T$. Corresponding to ground events are spacecraft events which occurred some time before this, differing by the time for light to travel between the transmitter and the receiver. Crucial vectors at t_{ru} are the position and velocity of the Earth receiving station(s) relative to Earth's center. Vectors returned from the CRS file are $\mathbf{R}_{os}$, $\mathbf{V}_{os}$, $\mathbf{R}_{oe}$, $\mathbf{V}_{oe}$, $\mathbf{R}_{oa}$, and $\mathbf{V}_{oa}$, labeled in t_{re}.

Receiving Station Vectors

The positions of the receiving stations are given in terms of latitude β, west longitude Λ, and distance ρ from the antenna perpendicular to the rotation axis of the Earth. The vector positions and velocities are obtained in two steps. The first step utilizes formulas in the Explanatory Supplement to the AENA to compute the position and velocity in

EME-date coordinates. Define the hour angle of the antenna at the receive time instant as γ. Then

$$\mathrm{R}_{ed}^{d} = (\rho\cos\gamma\,,\ \rho\sin\gamma\,,\ \rho\tan\beta)$$

and

$$\mathrm{V}_{ed}^{d} = (-|\mathrm{V}_{ed}|\sin\gamma\,,\ |\mathrm{V}_{ed}|\cos\gamma\,,\ 0)$$

where the superscript d signifies that the vectors are in EME-date coordinates. The hour angle is derived as follows.

The Julian day number of January 0.5, 1900 is $J_0 = 2415020$ and is used as a reference day. The day number of the encounter is denoted J. The Greenwich mean sidereal time of 0^{h} UT on encounter day is

$$T_{gms}(0^{\mathrm{h}}\mathrm{U.T.}) = 6^{\mathrm{h}}38^{\mathrm{m}}45^{\mathrm{s}}.836 + 8640184^{\mathrm{s}}.542D + 0^{\mathrm{s}}.0929D^2$$

where $D = (J - J_0)/36525$. Note that 0^{h} U.T. corresponds to a half-integral day (*e.g.* 2522222.5). The local sidereal time T_{ls} at midnight U.T. is

$$T_{ls}(0^{\mathrm{h}}\mathrm{U.T.}) = T_{gms}(0^{\mathrm{h}}\mathrm{U.T.}) - \Lambda$$

where longitude is positive in the west direction and is measured in hours, minutes and seconds at a time rate of 1 hour to 15°. The amount of sidereal time T_S corresponding to U.T. measure past midnight T_U on encounter day is

$$T_S = \frac{T_U T_{SD}}{86400}$$

where T_U, T_S, and T_{SD} are measured in seconds and T_{SD} is the second equivalent of the time $24^{\mathrm{h}}3^{\mathrm{m}}56^{\mathrm{s}}.55536$ of U.T. measure. Finally, γ is equivalent to the local sidereal time at encounter

$$\gamma = T_{ls}(T_U) = T_{ls}(0^{\mathrm{h}}\mathrm{U.T.}) + T_S$$

The magnitude of the velocity vector of the antenna $|\mathrm{V}_{ed}| = 2\pi\rho/T_{sol}$ where T_{sol} is the rotation period of the earth (*i.e.* mean sidereal day) in U.T. measure and is the second equivalent of $23^{\mathrm{h}}56^{\mathrm{m}}4^{\mathrm{s}}.09054$ very nearly.

These EME-date vectors are transformed to EME 1950.0 coordinates by applying the transformation

$$\mathrm{R}_{ed}(t_{ru}) = \mathrm{T}^{\mathbf{d}^{-1}}\mathrm{R}_{ed}^{d}(t_{ru})$$
$$\mathrm{V}_{ed}(t_{ru}) = \mathrm{T}^{\mathbf{d}^{-1}}\mathrm{V}_{ed}^{d}(t_{ru})$$

where the matrix $\mathbf{T}^{\mathbf{d}}$ transforms a vector in EME 1950.0 coordinates to EME-date coordinate and is given on the bottom of page 34 of the Explanatory Supplement to the AENA (1977 edition). Note the time since reference epoch for this matrix is in terms of Julian days and is computed in a similar manner to D above in the computation of T_{gms}. It is assumed to be constant over the entire occultation interval.

Transmit Time Vectors

To determine positions and velocities at transmit time t_{xe}, the time for transmitted photons to travel to the Earth is computed by leaving the Earth's position fixed at t_{re} and iteratively moving the spacecraft along its trajectory to the point where the time for light to travel from that point to the earth is commensurate with the distance between the spacecraft and the earth, *i.e.*, $\mathbf{R}_{as}$ and t_{xe} are allowed to vary in order to satisfy

$$|\mathbf{R}_{as}(t_{xe}) - \mathbf{R}_{ad}(t_{re})| = c(t_{re} - t_{xe})$$

where

$$\mathbf{R}_{as}(t_{xe}) = \mathbf{R}_{os}(t_{xe}) - \mathbf{R}_{oa}(t_{xe})$$
$$\mathbf{R}_{ad}(t_{re}) = \mathbf{R}_{oe}(t_{re}) - \mathbf{R}_{oa}(t_{re}) + \mathbf{R}_{ed}(t_{ru}).$$

The velocity of light is c. The sun is used as a reference since it is stationary in a reference frame moving with the velocity of the center of mass of the solar system. This determination assumes that a photon travels in a straight line during its journey across the solar system. Gravitational bending of light by a planet has been shown (Gresh, 1986) to cause an error in the estimate of positions on the order of a few meters for radio occultations and has been ignored.

Also from the CRS vectors at t_{xe},

$$\mathbf{V}_{as}(t_{xe}) = \mathbf{V}_{os}(t_{xe}) - \mathbf{V}_{oa}(t_{xe})$$

and

$$\mathbf{R}_{ds}(t_{re}, t_{xe}) = \mathbf{R}_{da}(t_{re}) - \mathbf{R}_{as}(t_{xe})$$
$$\mathbf{V}_{ds}(t_{re}, t_{xe}) = \mathbf{V}_{da}(t_{re}) - \mathbf{V}_{as}(t_{xe})$$

Intercept Time Vectors and Radial Location

Given these vectors, it is possible to compute the time δt it takes for a photon leaving the spacecraft to reach the ring plane and its rate of change. A photon in the direct signal

travels along $\mathbf{U}_{sd} = \mathbf{R}_{sd}(t_{xe}, t_{re})/|\mathbf{R}_{sd}(t_{xe}, t_{re})|$ with velocity c. The point of intersection of the ring plane and this ray with respect to the sun is

$$\mathbf{R}_{ap}(t_{ie}) = \mathbf{R}_{as}(t_{xe}) + c\delta t \mathbf{U}_{sd}$$

where $t_{ie} = t_{xe} + \delta t$ and δt is to be determined. Further, assuming the velocity of the planet is constant in its orbit,

$$\begin{aligned}
\mathbf{R}_{op}(t_{ie}) &= \mathbf{R}_{ap}(t_{ie}) - \mathbf{R}_{ao}(t_{ie}) \\
&= \mathbf{R}_{as}(t_{xe}) - \mathbf{R}_{ao}(t_{ie}) + c\delta t \mathbf{U}_{sd} \\
&= \mathbf{R}_{as}(t_{xe}) - \mathbf{R}_{ao}(t_{xe}) - \delta t \mathbf{V}_{ao}(t_{xe}) + \delta t c \mathbf{U}_{sd} \\
&= \mathbf{R}_{os}(t_{xe}) + \delta t(\mathbf{V}_{oa}(t_{xe}) + c\mathbf{U}_{sd})
\end{aligned}$$

By definition, in the planet-date coordinate system, $\mathrm{R}^o_{z\ op}(t_{ie}) = 0$, which implies

$$\delta t = -\frac{\mathrm{R}^o_{z\ os}(t_{xe})}{\mathrm{V}^o_{z\ oa}(t_{xe}) + c\mathrm{U}^o_{z\ sd}}$$

Having determined δt, $\mathbf{R}_{op}$ is obtained from the above formula. The velocity of the intercept point is

$$\mathbf{V}_{op}(t_{ie}) = \mathbf{V}_{os}(t_{xe}) + \dot{\delta t}(\mathbf{V}_{oa}(t_{xe}) + c\mathbf{U}_{sd}) + c\delta t \dot{\mathbf{U}}_{sd}$$

where

$$\dot{\mathbf{U}}_{sd} = \frac{1}{|\mathbf{R}_{sd}|}(\mathbf{V}_{sd} - \mathbf{U}_{sd}(\mathbf{R}_{sd} \cdot \mathbf{V}_{sd})/|\mathbf{R}_{sd}|)$$

and

$$\dot{\delta t} = -\frac{\mathrm{V}^o_{z\ os}}{\mathrm{V}^o_{z\ oa} + c\mathrm{U}^o_{z\ sd}} + \frac{c\dot{\mathrm{U}}^o_{z\ sd}\mathrm{R}^o_{z\ os}}{(\mathrm{V}^o_{z\ oa} + c\mathrm{U}^o_{z\ sd})^2}$$

The radial location $|\mathbf{R}_{op}|$ can now be directly related to t_{rx} through t_{xe}, t_{re}, δt, and ΔT.

Other Parameters

A number of other important geometric parameters are now easily defined. The sine of the direct ray incidence angle is $\mu_0 = \mathrm{U}^o_{z\ sd}$. The velocity of the intercept point in the radial direction is $\mathbf{U}^o_{op} \cdot \mathbf{V}^o_{op}$. Define $\mathbf{U}^o_{sd\perp}$ as the projection of $\mathbf{U}^o_{sd}$ on the ring plane, renormalized to be a unit vector. Then the angle between this direction and the radial direction is $\phi = \cos^{-1}(\mathbf{U}^o_{op} \cdot \mathbf{U}^o_{sd\perp})$. The magnitude of the mixed vector $\mathbf{R}_{sp}(t_{xe}, t_{ie}) =$

$\mathbf{R}_{op}(t_{ie}) - \mathbf{R}_{os}(t_{xe}) - \delta t \mathbf{V}_{oa}(t_{xe})$ gives the distance to the ringplane. The Fresnel scale F is defined in terms of these quantities

$$F = \sqrt{\left(\frac{\lambda|\mathbf{R}_{sp}|}{2}\right)\frac{\cos^2\phi + \mu^2\sin^2\phi}{\mu^2}}$$

where λ is the wavelength of the coherent microwaves.

The matrix $\mathbf{T}_{eo}$ rotates the coordinate system such that the x-axis of the planet-date system is aligned with the direction of ascending node of the ringplane on EME 1950.0. The angles formed by $\mathbf{R}_{op}$ and this direction, the projected Earth direction, and the projected Sun direction are

$$\alpha = \tan^{-1}\frac{\mathrm{R}^o_{y\ op}}{\mathrm{R}^o_{x\ op}}$$

$$\alpha_e = \alpha - \tan^{-1}\frac{\mathrm{R}^o_{y\ oe}}{\mathrm{R}^o_{x\ oe}}$$

$$\alpha_a = \alpha - \tan^{-1}\frac{\mathrm{R}^o_{y\ oa}}{\mathrm{R}^o_{x\ oa}}$$

respectively. The angles are measured counterclockwise looking down on the ring plane from the direction of the rotational pole.

Acknowledgements

Original formulation of this problem and preliminary solution can be traced to a memo by G.L. Tyler sometime in the 1970s. Software on which this documentation is based was written by H. Zebker and R. Simpson, with later modifications by the author, P. Rosen. The bending of light calculation was performed by D. Gresh. Please direct comments and questions to

Paul A. Rosen
Durand 211
(415) 723 3597

References

Her Majesty's Stationery Office (1977). *Explanatory Supplement to the American Ephemeris and Nautical Almanac*

Gresh, D.L., Personal Communication

Simpson R.A., G.L. Tyler, and J.B. Holberg (1983). Saturn's pole from combined ring occultation data. *Bull. Amer. Astron. Soc.* **14**, 731.

Voyager Navigation Team (1986). Trajectory solution of 2/6/86. Jet Propulsion Laboratory.

INITIAL CRS VECTORS AT SOME TIME INSTANT

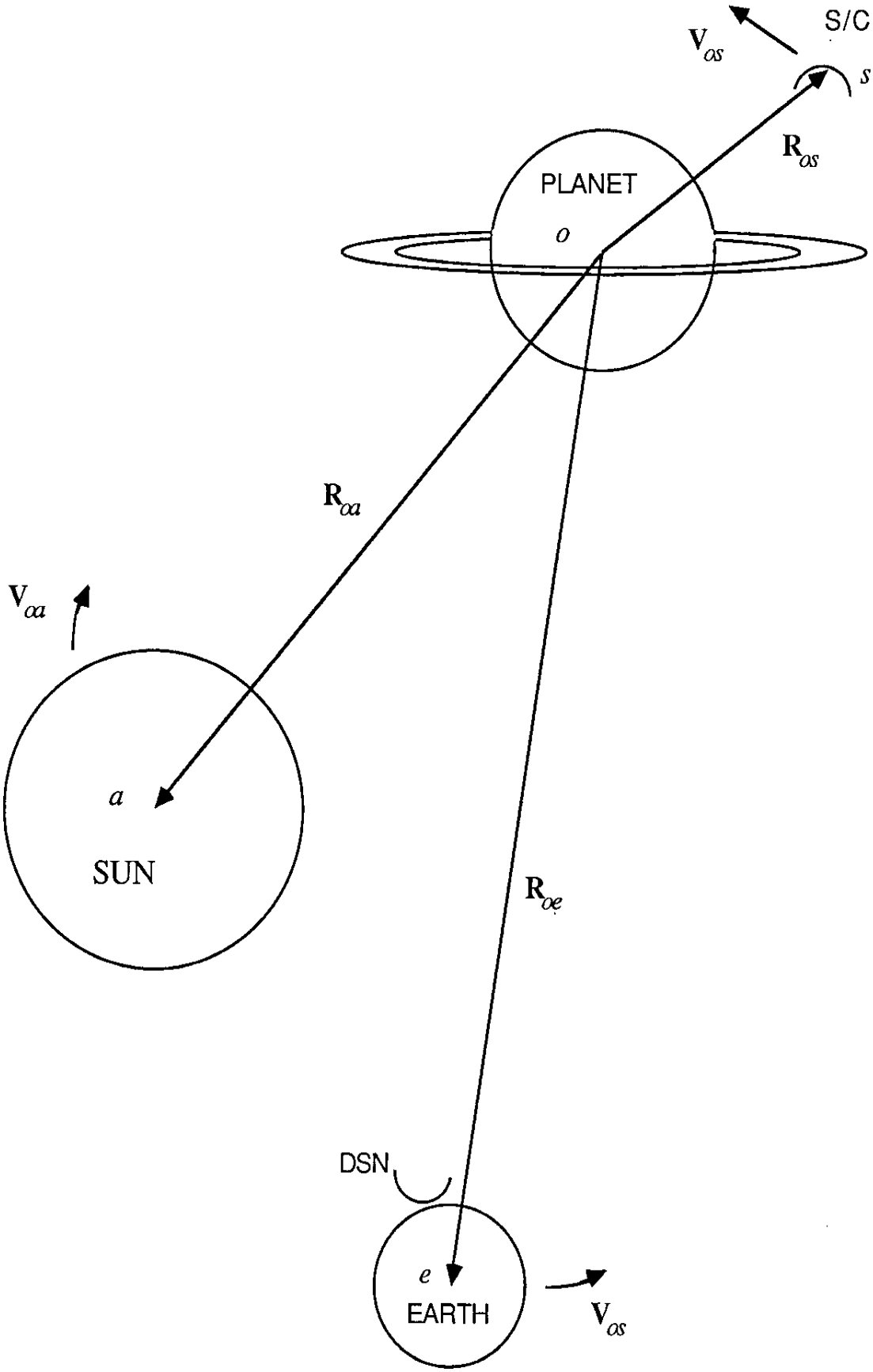

HELIOCENTRIC GEOMETRY AND TIMES FOR RADIAL LOCATION DETERMINATION

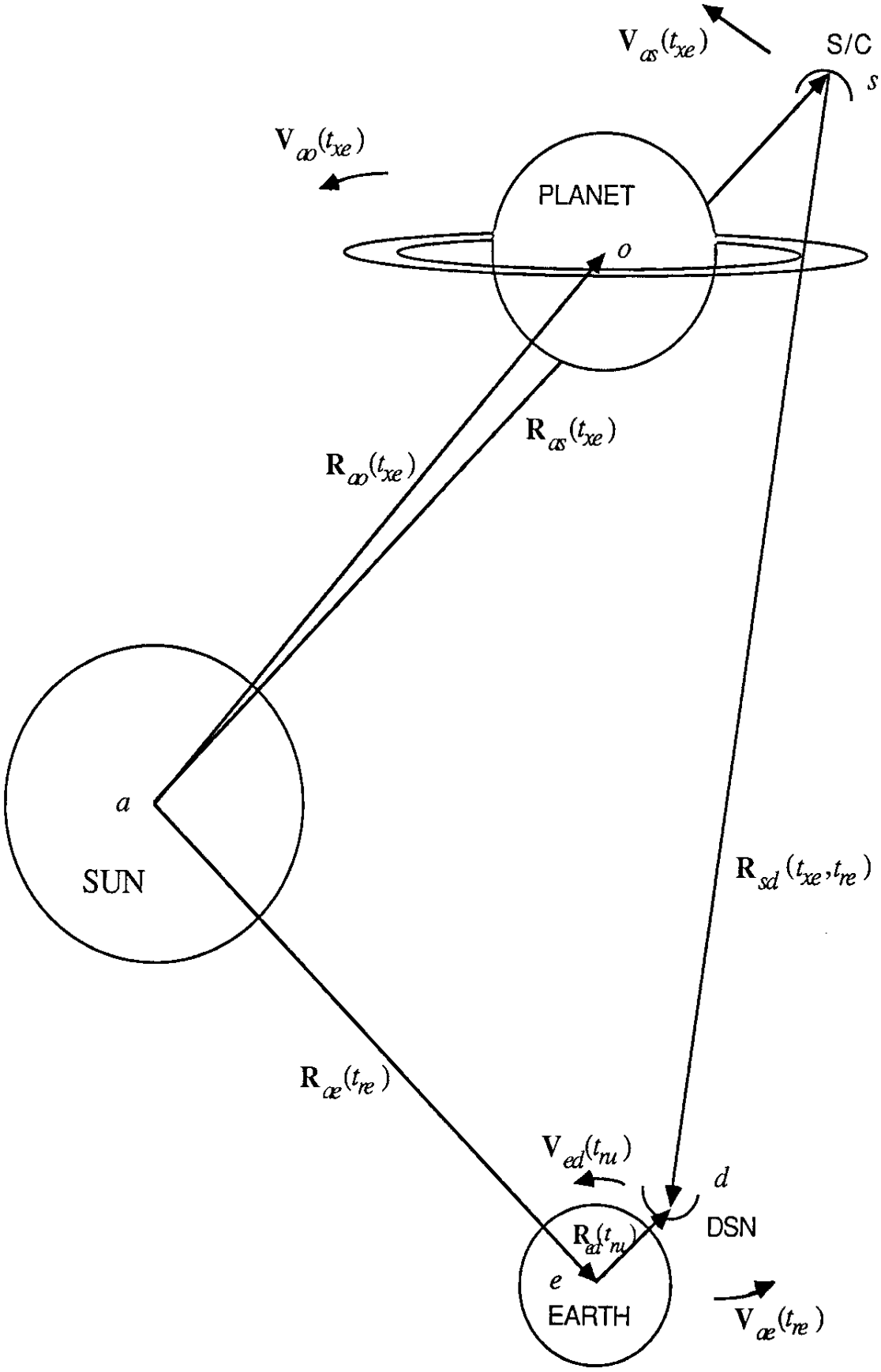

MOTIONS OF BODIES DURING LIGHT TRAVEL TIME

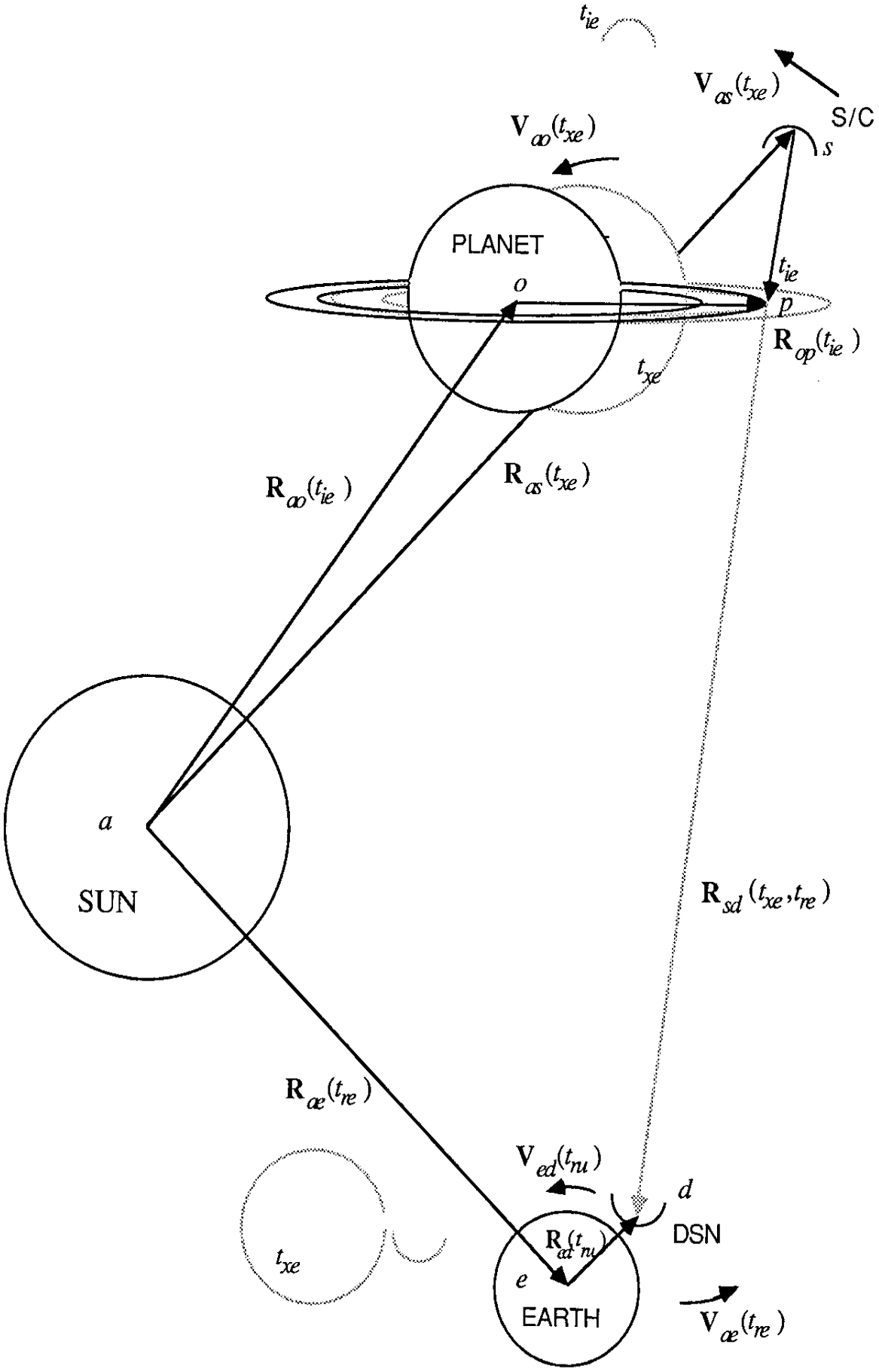

$NOP
$NOP
$NOP ========== LIST OF JSOUT5 ==========
$EXE TPLIST BS

INPUT PARAMETERS ARE: AS SR=1=1 1 1 1

TAPE NO. 1 FILE NO. 1
RECORD 1 LENGTH 8 00

VOYAGER - RADIO SCIENCE TEAM

Uranus Radio Occultation Data Set (19 August 1987)

Voyager 2 was occulted by Uranus, its rings, and atmosphere on 24-25 January 1986. During that period the spacecraft telecommunication system was used for active, remote probing of the planet and its environment at radio frequencies (wavelengths of 3.6 and 13 cm).

This documentation describes the Voyager radio science data set provided to NSSDC for archiving. These data have been partially processed (to reduce data volume, but without compromising the science value). The documentation explains how the data were acquired and how that processing has been conducted. Also included are notes which explain particular aspects of the data and calibrations/corrections which the user may wish to apply.

This documentation is included as file 0 on archive data tapes. Since some of the material (e.g., graphics) cannot be transferred electronically, hard-copy documentation is also being provided to NSSDC. The hard-copy material may also be slightly more up-to-date, so users are encouraged to use that if it is available.

The archive data set includes data from two radio receiving sites - the Canberra Deep Space Communications Complex and the Parkes Radio Astronomy Observatory. Canberra data are from two antennas at both 3.6 and 13 cm wave- lengths; Parkes data are from a single antenna at 3.6 cm. All data are in the form of complex time samples with leading header records.

The data are provided at two stages in processing. FND8 data have been reduced by a factor of 8 in the number of samples from the original data set. FND8/STEER1/FND8 data have been further processed to move the spacecraft signal to the center of the retained frequency passband and have then been reduced in volume by another factor of 8.

Data Acquisition and Distribution:

Radio Science data were obtained during the Uranus occultation using three antennas in Australia. At the Canberra Deep Space Communications Complex, data were acquired at 13 cm wavelength (S-band) using 34- and 64-m diameter antennas (DSS42 and DSS43, respectively). Data were also acquired at 3.6 cm wavelength (X-band) using DSS43. At the Parkes Radio Astronomy Observatory (designated DSS49) data were acquired at 3.6 cm wavelength using a 64-m diameter antenna.

Canberra data were acquired coherently from both antennas at both wavelengths. Local oscillators referenced to a common, highly-stable time/frequency standard were used to mix all signals to 0-25 kHz baseband outputs, where they were coherently sampled and digitized. One computer- driven local oscillator (POCA) was used to track the drifting signal during the observation period. The data rate from each of the three channels was 50000 8-bit samples per second. These data were recorded on computer- compatible digital tape and shipped to JPL for distribution to Radio Science Team investigators. For logging purposes, these have been assigned tape numbers in the UC-nnnn series, where nnnn is a four-digit number. Each UC-series tape contains approximately 8 minutes of data from all three Canberra channels; tape density is 6250 bpi. POCA data are included in header records.

The signal at Parkes was mixed to a 0-40 kHz baseband using local oscillators referenced to a highly stable time/frequency standard. One local oscillator (POCA) was computer-driven to compensate for Doppler drift during the observation period. The baseband signal was sampled and digitized. The data rate to computer-compatible tapes was 80000 8-bit samples per second. Each tape contains about 400 seconds of data; tape density is 1600 bpi. POCA data are included in header records. Parkes tapes were shipped to JPL, where they were assigned numbers in the UL-nnnn series; they were then distributed to Radio Science investigators.

D-78852
1/25/86 - 1/25/86
F: 13 CT: 6 mins.
Voyager 2
Radio Occulation
Uranus Encter.

Filtering and Decimation (FND8 data set):

POCA tracking was sufficiently accurate that Voyager signals remained within a 1 % segment of the recorded passband. It was thus possible to apply simple digital filtering techniques to reduce the number of data samples by a factor of 8 without fear of compromising science results.

Stanford implemented the digital "filtering and decimation" (FND) algorithm as follows:

1) Fourier transform 8-bit samples #0 through #1023; this provides a spectrum with 512 complex voltage values

2) In the frequency domain, extract a window of 64 consecutive values which brackets the desired signal

3) Compute the inverse transform of these 64 values; this provides a time series of 64 complex voltage values

4) Save the center 32 complex time samples

5) Fourier transform 8-bit samples #512 through #1535 and repeat the process

The frequency window (step 2) must remain fixed so long as coherent samples are desired; for Uranus the same window was used for processing the entire observing period. Processing parameters (including window definitions) are described in Appendix D. NFBIN is the processing parameter that identifies the first frequency bin to be retained in the spectrum (NFBIN=201 for Canberra at 3.6 cm wavelength; NFBIN=269 at Parkes); DECR indicates the length of the window (DECR=8, for 1/8 of the original spectrum width).

Computation of the inverse transform (step 3) presumes the window has been

```
***** JOB DONE.
$WEC LPS
```

$$