493

VOYAGER 1 CONCAT 1-7
VOYAGER 2 CONCAT 1-20
RADIO OCCULTATION BY NEPTUNE
77-084A-02A 77-076A-02A

VOYAGER 2
RADIO OCCULTATION BY NEPTUNE/TRITON
77-076A-02G

VOYAGER 1

COMPLEX ENVELOPE OCCULTATION SIGNALS

77-084A-02A

This data set have been restored. Originally there were seven 9-track, 800 BPI tapes, written in ASCII. There is one restored tape, written in ASCII. The original tapes were created on a MODCOMP computer, and the restored tape was created on an IBM 9021 computer. The DR tape is 3480 cartridge and the DS tape is 9-track, 6250 BPI. The DR and DS number along with their corresponding D numbers and time spans are as follows:

DR#	DS#	DD#	FILES	TIME - SPAN
DR-005175	DS-005175	DD-042317	1	03/05/79 16:03:00 - 16:16:20
		DD-042318	2	03/05/79 16:16:20 - 16:26:20
		DD-042319	3	03/05/79 16:26:20 - 16:36:20
		DD-042320	4	03/05/79 17:59:40 - 18:13:00
		DD-042321	5	03/05/79 18:13:00 - 18:26:20
		DD-042322	6	03/05/79 18:26:20 - 18:39:40
		DD-042323	7	03/05/79 18:39:40 - 18:52:60

VOYAGER 2

COMPLEX ENVELOPE OCCULTATION SIGN

77-076A-02A

This data set has been restored. There were originally 20 9-track, 800 BPI tapes written in ASCII. There are three restored tapes. The DR tapes are 3480 cartridges and the DS tapes are 9-track, 6250 BPI. The original tapes were created on a MODCOMP computer and the restored tapes were created on an IBM 9021 computer. The DR and DS numbers along with the corresponding D numbers are as follows:

DR#	DS#	D#	FILES	TIME SPAN	
DR004683	DS004683	D042324	1	07/10/79 - 07/10/79	(a)
		D042325	2	07/10/79 - 07/10/79	
		D042326	3	07/10/79 - 07/10/79	
		D042328	4	07/10/79 - 07/10/79	
		D042331	5	07/10/79 - 07/10/79	
		D042333	6	07/10/79 - 07/10/79	
		D042335	7	07/10/79 - 07/10/79	(b)
DR004684	DS004684	D042337	1	07/10/79 - 07/10/79	(c)
		D042339	2	07/10/79 - 07/10/79	(d)
		D042338	3	07/10/79 - 07/10/79	
		D042343	4	07/10/79 - 07/10/79	(e)
		D042342	5	07/10/79 - 07/10/79	
		D042341	6	07/10/79 - 07/10/79	(f)
		D042340	7	07/10/79 - 07/10/79	(g)
DR004685	DS004685	D042336	1	07/10/79 - 07/10/79	(h)
		D042334	2	07/10/79 - 07/10/79	(i)
		D042330	3	07/10/79 - 07/10/79	(j)
		D042329	4	07/10/79 - 07/10/79	(k)
		D042327	5	07/10/79 - 07/10/79	
		D042332	6	07/10/79 - 07/10/79	

(a) D042324: Read errors occurred in records 5, 23 of file 1.
(b) D042335: Read errors occurred in records 54, 56, 59, 276, 281, 336, 464, & 489 of file 1.
(c) D042337: Read errors occurred in records 59, 192, 277, 441, 927, & 2786 of file 1.
(d) D042339: Read errors occurred in records 201, 213, 218, 223, 228, 229, 230, 232, 235, 240, 241, & 242 of file 1.
(e) D042343: Read error occurred in record 146 of file 1.
(f) D042341: Read error occurred in record 3499 of file 1.
(g) D042340: Read error occurred in record 269 of file 1.
(h) D042336: Read errors occurred in records 53, 79, 120, 187, & 1675 of file 1.
(i) D042334: Read error occurred in record 3907 of file 1.
(j) D042330: Read error occurred in record 261 of file 1.
(k) D042329: Read error occurred in record 660 of file 1.

REQ.AGENT	RD#	ACQ. AGENT
LDM	VOO73	JLJ

VOYAGER 1 CONCAT 1-7
VOYAGER 2 CONCAT 1-20
COMPLEX ENVELOPE OCCULTATION SIGNALS
77-084A-02A
77-076A-02A

THIS DATA SET CONSIST OF 27 NINE TRACK, 800 BPI, SINGLE FILE, ASCII FORMATTED DATA TAPES. THE TIME SPANS CAN BE LOCATED BY AN ASCII LISTING OF THE FIRST RECORD. THESE TAPES WERE CREATED ON A DATA GENERAL ECLIPSE S/250 COMPUTER.

77-084A-02A

D#	C#	FILES	TIME SPANS	
D-42317	C-21384	1	3/5/79	16:03:00 - 16:16:20
D-42318	C-21385	1		16:16:20 - 16:26:20
D-42319	C-21386	1		16:26:20 - 16:36:20
D-42320	C-21387	1		17:59:40 - 18:13:00
D-42321	C-21388	1		18:13:00 - 18:26:20
D-42322	C-21389	1		18:26:20 - 18:39:40
D-42323	C-21390	1		18:39:40 - 18:52:60

77-076A-02A

D#	C#	FILES	TIME SPANS	
D-42324	C-21395	1	7/10/79	19:50:57 - 19:57:37
D-42325	C-21396	1		19:57:37 - 20:10:57
D-42326	C-21397	1		20:10:57 - 20:24:17
D-42327	C-21398	1		20:24:17 - 20:37:37
D-42328	C-21399	1		20:37:37 - 20:50:57
D-42329	C-21400	1		20:50:57 - 21:04:17
D-42330	C-21401	1		21:04:17 - 21:17:37
D-42331	C-21402	1		21:17:37 - 21:30:57
D-42332	C-21403	1		21:30:57 - 21:44:17
D-42333	C-21404	1		21:44:17 - 21:57:37
D-42334	C-21405	1		21:57:37 - 22:10:57
D-42335	C-21406	1		22:10:57 - 22:24:17
D-42336	C-21407	1		22:24:17 - 22:37:37
D-42337	C-21408	1		22:37:37 - 22:50:57
D-42338	C-21409	1		22:50:57 - 23:04:17

77-076A-02A CONT.

D#	C#	FILES	TIME SPANS
D-42339	C-21410	1	23:04:17 - 23:17:37
D-42340	C-21411	1	23:17:37 - 23:30:57
D-42341	C-21412	1	23:30:57 - 23:44:17
D-42342	C-21413	1	23:44:17 - 23:57:37
D-42343	C-21414	1	23:57:37 - 24:10:57

CENTER FOR RADAR ASTRONOMY
STANFORD UNIVERSITY
DEPARTMENT OF ELECTRICAL ENGINEERING
STANFORD, CALIFORNIA 94305

April 10, 1981

TO: Ralph Post, NSSDC

FROM: G. L. Tyler, Stanford Center for Radar Astronomy

RE: CONCAT TAPE FORMAT -- Voyager 1, 2 at Jupiter

The tapes contain filtered data from Voyager occultations by Jupiter. Input data were in standard DSN narrowband REDR records from the Occultation Data Assembly. The filter employed has the following shape in the frequency domain. It is flat over its central 80%, and is a sine wave matched for continuous slope over the 10% at either end of the passband. End effects in the time domain which result from discrete time analysis have been removed.

The tapes were generated using Fortran V programs on a Data General Eclipse S/250 machine. All tape densities are 9 track 800 bits per inch. Each tape consists of a single file. The first record contains descriptive text and the values needed to compute event times, frequencies, sampling rates, etc. All remaining records contain data. The tape is terminated by a double EOF mark.

The material in the first record was processed with a Fortran V ENCODE statement which generates an ASCII representation. The ASCII values were then written to tape. In this format, a tape dump of the first record produces readable text by which the tape can be identified. The material in the first

record must be decoded (Fortran DECODE statement) for use in computer processing. This can be accomplished as follows: Define an integer array of 880 elements and equivalence an integer variable to element 691 (assuming 16 bit integers). Read the first record into the array then execute the DECODE statement shown below. In Fortran V:

```
      INTEGER HEADER(880),IPOINTER
      EQUIVALENCE (HEADER(691),IPOINTER)
      DECODE(IPOINTER,100) N1024,ISR,IDCMRATIO,IPKFREQ,IBW,DELTA,LENGTH,
           ISBIN,IXBIN,SFREQ,XFREQ,IENTRY,NDAY,NHOUR,MINUTE,SECOND
  100 FORMAT(I6,6X,I7,11X,I4,9X,I6,32X,I5,7X,F8.4,9X,I5,10X,I5,36X,
           I5,10X,F10.3,10X,F10.3,16X,I4,22X,I5,7X,I4,9X,I4,9X,F7.2)
```

Earth receive time (UTC) is given by integers NDAY, NHOUR, MINUTE and real variable SECOND. A small correction must be added to SECOND. (This results from the mechanics of the filter and decimation operations.)

```
SECOND = SECOND + (IENTRY - 1)/ISR - (LENGTH/2)/IBW
```

This corrected time corresponds to the first sample in the first data record. IENTRY, ISR, LENGTH, and IBW are all integers. IBW is the 13 cm bandwidth after filtering. The 3.6 cm bandwidth is 3*IBW. ISR is the sampling rate of the original 13 cm data. To compute the frequency of the lower edge of the 13 and 3.6 cm passbands, use the formulas:

```
13 cm:     SFREQ = (ISBIN - 1)*ISR/N1024
3.6 cm:    XFREQ = (IXBIN - 1)*3*ISR/N1024
```

ISR, N1024, ISBIN, and IXBIN are all integers. Result is the baseband frequency of the lower edge of the filter passband in Hertz. The computation does not include the POCA frequencies. Information from Voyager Project POCA tapes must be used to reconstruct the antenna frequency.

Each data record contains 512 complex samples stored in the following representation:

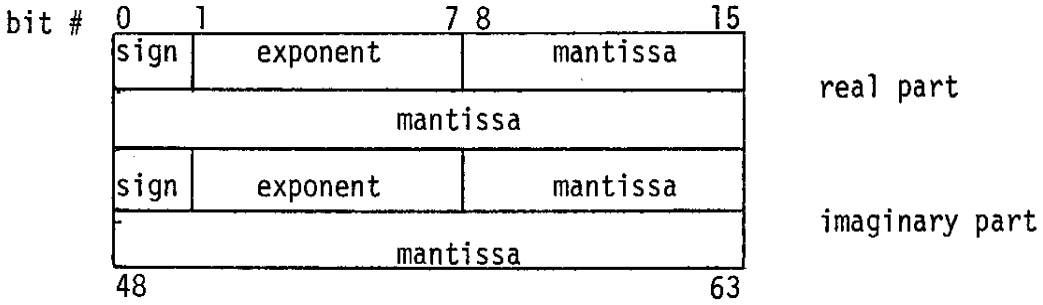

The first data record contains 13 cm (S-band) samples, then the next three contain 3.6 cm (X-band) samples. The pattern in groups of four records is repeated for the remainder of the tape : S, X, X, X, S, X, X, X, . . . The first sample in an S-band record coincides with the first sample in the X-band record which immediately follows. Note that the first S and X-band data records on each tape begin with sample values of zero which result from the filtering method and are required for time alignment.

D-42317
3/5/79
16:03:00 - 16:16:20

DUMP OF TAPE X405

INPUT TAPE X405 ON MT2
DATA INPUT H9 NF 1 FL 1 1 1

FILE 1 RECORD 1 LENGTH 17602BYTES

(0)	54484520	434F4E43	4154454E	41544544	20564F59	32204644	44522054	41504520	48455245	57495448
(40)	20574153	20505 24F	44554345	44204259	2043494E	44592753	2038302F	30322F32	3520434F	4E434154
(80)	454E4154	494F4E20	50524F47	52414D2E	2052554E	20444154	45202620	54494D45	20414E44	204F4C44
(120)	20484541	44455220	464F4C4C	4F573A20	38302F20	372F3331	2C202020	31343A31	353A3430	2E202020
(160)	20205441	5045204E	414D453A	2020564F	59414745	52205245	464F524D	41545445	44204441	54412052
(200)	45434F52	44204B4E	4F574E20	41532056	52464452	20202020	20202020	20202020	20202020	20202020
(240)	54415045	20464F52	4D41543A	20204120	47454E45	52414C20	48454144	45522046	4F4C4C4F	57454420
(280)	42592041	204C4F43	414C2048	45414445	5220464F	52204541	43482047	524F5550	204E4620	464F5552
(320)	20202020	20202020	20202020	20204441	54412052	45434F52	44532E20	20454143	48204441	54412052
(360)	45434F52	4420434F	4E544149	4E532031	30323421	504F494E	54532E20	20524543	4F524420	31204953
(400)	20202020	20202020	20202020	2020532D	42414E44	2E202052	45434F52	44532032	2C332C34	20415245
(440)	2054494D	45205345	5155454E	5449414C	20444154	41204652	4F4D2058	2D42414E	442E2020	20202020
(480)	202C2020	50524F47	52414D3A	2020564F	59414745	52205245	44522052	45464F52	4D415420	20202020
(520)	20202020	20202020	20202020	20202020	20202020	20202020	20202020	20202020	20202020	20202020
(560)	20202020	56455253	494F4E3A	20204150	52203330	2C202737	39202020	20324C52	2F505220	20202020
(600)	20202020	20202020	20202050	524F4752	414D4D45	523A2020	53484552	52592044	5943 4520	20202020
(640)	20494E50	55542054	4150453A	20205643	31333420	20202020	4D4F4445	20202031	202C2020	20202020
(680)	20202020	20202020	20202049	4E505554	20444154	453A2020	342F3236	2F373920	20202020	20202020
(720)	4F555450	55542054	415C453A	20205652	46445231	33344120	20202020	50415254	20202031	20202020
(760)	20202020	20202020	20202020	2052554E	20444154	453A2020	31333A30	33204D41	59203034	2C273739
(800)	00002710	00000000	00000001	00000001	00000001	00000001	00000002	00000000	00000000	00000006
(840)	00000006	00000000	00000000	00000008	00000000	00000000	00000000	00000000	00000000	0000004F
(880)	00000072	00000011	00000016	0000002A	0000001F	0000003F	0000004F	00000040	00000010	00000003
(920)	00000000	00000000	00000000	00000000	00000000	00000000	00000056	00000047	00000031	00000033
(960)	0001004F	00090018	00090017	00154655	41840000	000000B9	00E74370	4E00441A	5248419C	40000000
(1000)	00000000	00000000	00000000	00000000	00000000	00000000	00000000	00000000	00000000	00000000
(1040)	20202020	50524F47	52414D3A	2020564F	59414745	52204649	4C544552	20414E44	20444543	494D4154
(1080)	494F4E2C	20564552	53494F4E	20322020	20202020	50524F47	52414D4D	45523A20	20532E20	44594345
(1120)	4F555450	55542054	4150453A	20205646	44445231	33344120	20205441	50454E4F	3A202031	20202020
(1160)	20202020	20202020	23202020	52554E20	44415445	3A202020	392F3237	2F373920	2020393A	32333A32
(1200)	54415045	20464F52	4D41543A	20204120	47454E45	52414C20	48454144	45522046	4F4C4C4F	57454420
(1240)	42592046	494C5445	52454420	414E4420	44454349	4D415445	4420434F	4D504C45	58204441	54412000
(1280)	20202020	20202020	20202020	20205245	434F5244	532C204F	46205349	5A452035	31322041	4E442053
(1320)	414D4520	4348414E	4E454C20	4F524445	52204153	20494E50	55543A20	20532C58	2C582C58	2E202000
(1360)	494E5055	54205041	52414D45	54455253	3A20204E	20203130	32343B20	20495352	20203130	30303039
(1400)	20204443	4D524154	494F2020	20383B20	20504846	52455120	20323130	302E3B00	00000000	00000000
(1440)	20202020	20202020	20202020	20202020	20202042	57202036	32352E20	20444C54	41202039	2E373635
(1480)	363B2020	484C4E47	54482020	2036343B	20204953	46304249	4E202031	38353B00	00000000	00000000
(1520)	20202020	20202020	20202020	20202020	20202049	58463042	494E2020	32333138	20205346	30465245
(1560)	51202031	3739362E	3837353B	20205846	30465245	51202036	37333B2E	32383100	00000000	00000000
(1600)	49454E54	52593A20	2020313B	20202020	20524543	4F524454	494D453A	20204441	59202020	36343B20
(1640)	20484F55	52202031	363B2020	4D494E55	54452020	20333820	20534543	4F4E4420	2020202E	30300000
(1680)	53544152	5454494D	45203D20	5245434F	52445449	4D45202B	20284945	4E545259	202D2031	292F4953
(1720)	52202020	20202020	20202020	20202020	53544152	5454494D	45205345	434F4E44	2020202E	30303030

FILE 1 RECORD 3909 LENGTH 4096BYTES

(0)	00000000	00000000	00000000	00000000	00000000	00000000	00000000	00000000	00000000	00000000
(40)	00000000	00000000	00000000	00000000	00000000	00000000	00000000	00000000	00000000	00000000
(80)	00000000	00000000	00000000	00000000	00000000	00000000	00000000	00000000	00000000	00000000
(120)	00000000	00000000	00000000	00000000	00000000	00000000	00000000	00000000	00000000	00000000
(160)	00000000	00000000	00000000	00000000	00000000	00000000	00000000	00000000	00000000	00000000
(200)	00000000	00000000	00000000	00000000	00000000	00000000	00000000	00000000	00000000	00000000
(240)	00000000	00000000	00000000	00000000	00000000	00000000	00000000	00000000	00000000	00000000
(280)	00000000	00000000	00000000	00000000	00000000	00000000	00000000	00000000	00000000	00000000
(320)	00000000	00000000	00000000	00000000	00000000	00000000	00000000	00000000	00000000	00000000
(360)	00000000	00000000	00000000	00000000	00000000	00000000	00000000	00000000	00000000	00000000
(400)	00000000	00000000	00000000	00000000	00000000	00000000	00000000	00000000	00000000	00000000
(440)	00000000	00000000	00000000	00000000	00000000	00000000	00000000	00000000	00000000	00000000

D-92318 6/1979
16:16:19.94 - 16:26:20
3/6/1979

DUMP OF TAPE X409

INPUT TAPE X409 ON MT3
DATA INPUT H0 FL 1 2 2

DATA INPUT H9 FL 1 2 2

FILE 1 RECORD 0 LENGTH 1760BYTES

(0)	54434E20	434F4D4D	414E4420	41544520	20564F59	32204644	44522054	41504520	48455245	57495448
(40)	20544153	20504F4E	4E544345	442E4259	20437A4E	4E462753	20585A2E	32204E45	32204F52	4E4D4154
(80)	45414154	4D4E4520	53544F47	524A4D2E	20525A4E	20444154	45202620	54494D45	20414E44	20444350
(120)	20484541	44455220	46464F4F	4E573A20	3B1F2E3A	3E2F3C3E	2C2C2020	3131413A	383A3838	2E202020
(160)	20205441	50452041	4E4E4F3A	20205647	59474745	52205245	464F524D	41545445	44204441	54412052
(200)	45544552	44204E4E	4E574F20	41532056	52454D4F	20202020	20202020	20202020	20202020	20202020
(240)	5441504F	20464F52	4D415443	20204120	52454E45	4441204	4E5A4144	4E532045	4F4C4F4F	57455220
(280)	42592041	204C4F43	414C2048	45414445	52204647	52204541	43482047	52415550	20474552	4641552E
(320)	20202020	20202020	20202020	20204441	54412052	45532E20	20564143	48204441	54412052	45532E20
(360)	45434152	42204348	4E544149	4E532031	30323420	504F4E45	54532E20	20524543	4F524420	31204953
(400)	20202020	20202020	20202020	20205532	42414E44	2E202052	45434F52	44532E32	20332034	20415245
(440)	2054494D	45205345	51554554E	5449414C	20444154	41204652	4F4D2058	20424148	442E2020	20202020
(480)	20202020	50524F47	52414D3A	20205647	59414745	52205245	44522052	45464F52	4D415420	20202020
(520)	20202020	20202020	20202020	20202020	20202020	20202020	20202020	20202020	20202020	20202020
(560)	20202020	56455253	494F4E3A	20204155	47203139	37392029	20203220	4C522F50	5220202C	20202020
(600)	20202020	20202020	20205052	45475241	4D4D4552	3A202053	48455252	59204459	43452020	20202020
(640)	20494E50	55542054	4150453A	20205643	31333841	45202020	204D4F44	45202020	33202020	20202020
(680)	20202020	20202020	2020494E	50555420	44415445	3A202037	392F2036	34203136	3A31363A	32303630
(720)	4F555450	55542054	4150453A	20205652	46445231	33384145	20202020	50415254	20202031	20202020
(760)	20202020	20202020	20202020	52554E20	44415445	3A202020	392F3130	2F373920	31333A32	3A3A2032
(800)	00002710	00000000	00000001	00000001	00000001	00000001	00000002	00000000	00000000	00000006
(840)	00000006	00000000	00000000	00010000	00000000	00000000	00000100	00000000	00000000	0000004F
(880)	00000065	00000013	0000003B	00000036	0000001F	0000003F	0000004F	00000040	00000010	00000010
(920)	000000D0	00000000	00000000	00000000	00000000	00000000	00000056	00000047	00000031	00000033
(960)	0001004F	0009001B	001A0026	001E4655	44D3F2E4	8E8A00B9	00E74370	4E00441A	52434190	40000050
(1000)	00000000	00000000	00000000	00000000	00000000	00000000	00000000	000000 0	00000000	00 00000
(1040)	20202020	50524F47	52414D3A	20205647	59414745	52204649	4C544552	20414E44	20444543	494D4154
(1080)	494F4E2C	20564552	53494F4E	20322020	20202020	50524F47	52414D4D	45523A20	20532E20	44594345
(1120)	4F555450	55542054	4150453A	20205646	44445231	33384145	20205441	50454E4F	3A202031	20202020
(1160)	20202020	20202020	20202020	52554E20	44415445	3A202020	392F3237	2F373920	20313303A	33303A33
(1200)	54415045	20464F52	4D41543A	20204120	47454E45	52414C20	48454144	45522046	4F4C4C4F	57454420
(1240)	42592046	494C5445	52454420	414E4420	44454349	4D415445	4420434F	4D504C45	58204441	54412000
(1280)	20202020	20202020	20202020	20205245	434F5244	53202C4F	46205349	5A452035	31322041	4E442053
(1320)	414D4520	4348414E	4E454C20	4F524445	52204153	20494E50	55543A2C	20532C58	2C582C58	2E202020
(1360)	494E5055	54205041	52414D45	54455253	3A20204E	20203130	32343B20	20495352	20203130	30303038
(1400)	20204443	4D524154	494F2020	20383B20	20514846	52455120	20323130	302E3800	00000000	00 00001
(1440)	20202020	20202020	20202020	20202020	20202042	57202036	32352E20	20444C54	41202039	25373635
(1480)	363B2020	484C4E47	54482020	20363438	20204953	46304249	4E202031	38353B20	00000000	00 00000
(1520)	20202020	20202020	20202020	20202020	20202049	58463042	494E2020	32333135	20205346	30465245
(1560)	51202031	3739362E	33373538	20205846	30465245	51202036	37333226	32383100	00000000	00 00000
(1600)	494454E54	52593A20	20383938	20202020	20524543	4F524454	494D453A	20204D41	54202020	3A3A3520
(1640)	20484F55	52202031	35382020	4D494E55	54452020	31353820	20534543	4F4E4420	20313926	00 00000
(1680)	53544152	5454494D	45203D20	52454346	52445449	4D452028	20284945	4E545259	20202031	2925 4953
(1720)	52202020	20202020	20202020	20202020	53544152	5454494D	45205345	434F4E44	20313926	39343836

FILE 1 RECORD 2 LENGTH 4096BYTES

(0)	00000000	00000000	00000000	00000000	00000000	00000000	00000000	00000000	00000000	00000000
(40)	00000000	00000000	00000000	00000000	00000000	00000000	00000000	00000000	00000000	00000000
(80)	00000000	00000000	00000000	00000000	00000000	00000000	00000000	00000000	00000000	00000000
(120)	00000000	00000000	441F4538	C39E6165	C41D7439	44104053	441D2BE8	C4173116	C41AB1E9	441B5D16
(160)	44139E39	C4137D59	C38ED7A8	442215BE	42F0D7F0	C425C8F5	436F1526	4423BE55	C33053C4	C427DF83
(200)	44135AFB	441FF5D6	C4190558	4418ECC2	43F6CD78	C422256F	C39FFE5C	44236BF3	436 1E0	
(240)	C421ED5D	433370DF	44219683	C3852B01	C42C66BF	4410CFC3	44216D93	C414C1C6	C4139A73	4417F862
(280)	4412B8C8	C42794A3	C3D172A3	44243B8C	4337D5C7	C4247AE9	433DC792	4429B4DC	C410BE74	C4217135
(320)	4411F1FD	4420436E	C4180603	C41C59AA	441A3CD5	44135A74	C41EABE3	C41236D9	44257535	4385 3C7
(360)	C41F523D	435083BE	4422ACB8	C3A3EA3B	C4284604	4414A80F	441C3499	C412B2D1	C41976F2	441A510F

D-42323
3/5/79
18:39:3994 - 18:52:60

DUMP OF TAPE X407

INPUT TAPE X407 ON MT2
DATA INPUT H9 FL 1 1 STOP

FILE 1 RECORD 1 LENGTH 1760BYTES

(0)	54484520	434F4E43	4154454E	41544544	20564F59	32204644	44522054	41504520	48455245	57495448	
(40)	20574153	20546524F	44554345	442044259	2043494E	44592753	20383025	30322E32	35204346	4E434154	
(80)	454E4154	494F4E20	50524F47	52414D2E	20525546	20444154	45202620	54494D45	20414E44	204F4C44	
(120)	20484541	44455220	464F4C4C	4F573A20	38302F20	392E3136	20202020	31353A20	393A3531	2E202020	
(160)	20205441	50452046	414D453A	20205646	59414745	52205245	464F524D	41545445	44204441	54412052	
(200)	45434F52	44204B4E	4F574E20	41532056	52464452	20202020	20202020	20202020	20202020	20202020	
(240)	54415045	20464F52	4D41543A	20204120	47454E45	52414C20	48454144	45522046	4F4C4C4F	57454420	
(280)	42592041	204C4E43	414C2048	45414445	5220464F	52204541	43482047	524F5550	204F4620	464F5552	
(320)	20202020	20202020	20202020	20204441	54412052	45434F52	44532E20	20454143	48204441	54412052	
(360)	45434F52	4420434F	4E544149	4E532031	30323420	504E494E	54532E20	20524543	4F524420	31204953	
(400)	20202020	20202020	20202020	20205320	42414E44	2E202052	45434F52	44532032	2C332C34	20415245	
(440)	20544940	45205345	5155454E	5449414C	20444154	41204652	4F4D2058	2D42414E	442E2020	20202020	
(480)	20202020	50524F47	52414D3A	20205646	59414745	52205245	44522052	45464F52	4D415420	20202020	
(520)	20202020	20202020	20202020	20202020	20202020	20202020	20202020	20202020	20202020	20202020	
(560)	20202020	56455253	494F4E3A	20204150	52203330	20202737	39202020	20324C52	2F505220	20202020	
(600)	20202020	20202020	20202050	524F4752	414D4D45	523A2020	53484552	52592044	59434520	20202020	
(640)	20494E50	55542054	4150453A	20205643	31363120	20202020	4D4F4445	20202032	20202020	20202020	
(680)	20202020	20202020	20202049	4E505554	20444154	453A2020	332F3235	2F373920	20202020	20202020	
(720)	4F555450	55542054	4150453A	20205652	46445231	38312020	20202020	50415254	20202031	20202020	
(760)	20202020	20202020	20202020	2052554E	20444154	453A2020	30333A30	352D4D41	59203136	20273739	
(800)	00002710	00000000	00000001	00000001	00000001	00000001	00000002	00000000	00000000	00000006	
(840)	00000006	00000000	00000000	00000008	00000000	00000000	00000000	00000000	00000000	0000004F	
(880)	00000046	00000013	0000002F	00000036	0000001F	0000003F	0000004F	00000040	00000012	0000001D	
(920)	FFFFFFA0	00000000	00000000	00000000	00000000	00000000	00000056	00000047	00000031	00000033	
(960)	0001004F	00090019	000F0033	00284655	666BF2E4	8E8A0CC3	00F54376	6880441B	EC70419C	40000000	
(1000)	00000000	00000000	00000000	00000000	00000000	00000000	00000000	00000000	00000000	00000000	
(1040)	20202020	50524F47	52414D3A	20205646	59414745	52204649	4C544552	20414E44	20444543	494D4154	
(1080)	494F4E2C	20564552	53494E4E	20322020	20202020	50524F47	52414D4D	45523A20	20532E20	44594345	
(1120)	4F555450	55542054	4150453A	20205646	44445231	38312020	20205441	50454E4F	3A202031	20202020	
(1160)	20202020	20202020	20202020	52554E20	44415445	3A2D2020	392F3235	2F373920	2031353A	35313A34	
(1200)	54415045	20464F52	4D41543A	20204120	47454E45	52414C20	48454144	45522046	4F4C4C4F	57454420	
(1240)	42592046	494C5445	52454420	414E4420	44454349	4D415445	4420434F	4D504C45	5820444 1	54412000	
(1280)	20202020	20202020	20202020	20205245	434F5244	532C204F	46205349	5A452035	31322041	4E442053	
(1320)	414D4520	4348414E	4E454C20	4F524445	52204153	20494E50	55543A20	20532C58	2C582C5E	2E2 2000	
(1360)	494E5055	54205041	52414D45	54455253	3A20204E	20203130	32343B20	20495352	20203130	30303038	
(1400)	20204443	4D524154	494F2020	20383B20	20534846	52455120	20323230	302E3B00	00000000	00000000	
(1440)	20202020	20202020	20202020	20202020	20202042	57202036	32352E20	20444C54	41202039	2E373635	
(1480)	363B2020	484C4E47	54482020	2036343B	20204953	46304249	4E202031	39353B00	00000000	00000000	
(1520)	20202020	20202020	20202020	20202020	20202049	58463042	494E2020	3234353B	20205346	30465245	
(1560)	51202031	3839342E	35333133B	20205846	30465245	51202037	31343E2E	34333800	00000000	00000000	
(1600)	49454E54	52593A20	20383938B	20202020	20524543	4F524454	494D453A	20204441	59202020	36343B20	DAY
(1640)	20484F55	52202031	383B2020	4D494E55	54452020	33393B20	20534543	4F4E4420	20333920E	39340000	
(1680)	53544152	5454494D	45203D20	5245434F	52445449	4D45202B	20264945	4E545259	202D2031	292F4953	
(1720)	52202020	20202020	20202020	20202020	53544152	5454494D	45205345	434F4E44	20333920E	39343838	

EOJ STOP REQUESTED IN FILE 1

EOJ DUMP STOPPED AFTER FILE 1 # OF PERMANENT READ ERRORS 0

START TIME 03/30/81 15:54:07 STOP TIME 03/30/81 15:54:15

$$
$EXE TPDUMP BS

D-42324
19:50:57-19:57:37

```
$JOB  11:24:36
$ASS IN MT1
$NOP ************* ASCII LISTING OF 1ST. RECORD, TAPE X933 ******************
$EXE TPLIST BS                                        303

INPUT PARAMETERS ARE:  AS SR=1=1

 TAPE NO.   1              FILE NO.   1
 RECORD   1                LENGTH   1760
THE CONCATENATED VOY2 FDDR TAPE HEREWITH WAS PRODUCED BY CINDY'S 80/02/21 CONCATENATION PROGRAM. RU
N DATE & TIME AND OLD HEADER FOLLOW: 80/ 2/21,   15:42:23.     TAPE NAME:  VOYAGER REFORMATTED DATA
 RECORD KNOWN AS VRFDR                    TAPE FORMAT:  A GENERAL HEADER FOLLOWED BY A LOCAL HEADER
 FOR EACH GROUP OF FOUR                DATA RECORDS.  EACH DATA RECORD CONTAINS 1024 POINTS.  RECORD
1 IS              S-BAND.  RECORDS 2,3,4 ARE TIME SEQUENTIAL DATA FROM X-BAND.          PROGRAM:  V
OYAGER REDR REFORMAT5                                                  VERSION:  OCT 1979    5 LR/PR
                PROGRAMMER:  SHERRY DYCE        INPUT TAPE:  VP097       MODE   1                  INP
UT DATE:  79/191 19:50:57000UTPUT TAPE:  VRFDP097       PART   1                RUN DATE:  10/18/79
11:19:58  '                                                                                  0
                0
D
ION 2       PROGRAMMER:  S. DYCEOUTPUT TAPE:  VFDDP097    TAPENO:  1                RUN DATE:  11/13
/79  11: 3:4TAPE FORMAT:  A GENERAL HEADER FOLLOWED BY FILTERED AND DECIMATED COMPLEX DATA
        RECORDS, OF SIZE 512 AND SAME CHANNEL ORDER AS INPUT:  S,X,X,X.   INPUT PARAMETERS:  N  1024
; ISR  10000;  DCMRATIO   8;  PKFREQ  2075.;                                BW  625.  DLTA  9.7656;  H
LNGTH   64;  ISFOBIN  181;                          IXFOBIN  229;  SFOFREQ  1757.813;  XFOFREQ  6
679.688          IENTRY:   1;     RECORDTIME:  DAY  191;  HOUR  19;  MINUTE  50;  SECOND  57.00  STA
RTTIME = RECORDTIME + (IENTRY - 1)/ISR                 STARTTIME SECOND 57.0000

***** JOB DONE.
$EXE TPDUPC BS
```

DUMP OF TAPE X-407

INPUT TAPE X-407 ON MT2
DATA INPUT H9 NF 1 SR 1 1950 5

FILE 1 RECORD 1950 LENGTH 4096BYTES

(0)	C336D8E2	43410A8B	4363E528	C32AD9B2	C34F4D6D	C322D684	4364CAB2	4226D5E0	C3335C1E	C348CB8D
(40)	43142317	43732B18	C3114601	C34E1E49	C33457BA	434DF592	433D29A0	C3436D9B	C34C49DE	435B8AE2
(80)	43421570	C32F1E65	C32AEF16	431318A6	434121A8	C3317FCE	C32C936A	C32D8B0A	4334FDB6	43478284
(120)	C3387103	C3313823	431E3263	4379DE9E	C32C6844	C336EA76	C242D3E0	432B896E	43470F8E	C35E285A
(160)	C363DF97	43430219	434BE06D	C343DE37	C3231A48	43243D5D	433F5AB1	431A31BB	C35615F4	C319AE95
(200)	433D71EC	4327EA90	C334FBDA	C38663AF	4340A7B6	438BD59D	C3132EEC	C3456639	C3137F2F	4360804C
(240)	42D29F90	C36DB824	C3437171	432F9D56	4355AD1C	C329F7AB	C34CB815	C3242944	43490F83	43127F89
(280)	C3464215	429F265E	434F59E9	435CC657	C32BDD6F	C373EE35	431C8102	434B8B25	4317D972	C33028DB
(320)	C3371ECD	435C4F73	4380B491	C3780E8E	C34EB8A3	435A44AC	4337D5C4	C259EB24	C38A8497	C2FF39F0
(360)	4371191B	43108E97	C37C65E7	C35847C4	43550BDF	4372FC63	C335077B	C34DC12D	431DDA00	43676147
(400)	431F4B94	C367E40A	C3304717	4374969A	4333C0A4	C370B612	C368EC42	43160A3F	43546744	C3389384
(440)	C3645E3D	431B66BE	43C14929	4331F57D	C391DF97	C3452531	433D86B2	43532AB4	C2AE6F80	C3874191
(480)	C3299D60	43AEC453	43320B0D	C3651CEE	C3506BC3	4323BE02	4381D758	C3363F79	C35B1513	4338F76A
(520)	4377D686	42FC23BD	C3644E03	C3286498	4317057B	43136A6D	C32D3131	C3223CEC	431C3C73	43474A91
(560)	C320E9B8	C358FD60	C2C0235E	435D6597	43362273	C35429FE	C310D174	43692971	434CC825	C340F24D
(600)	C3427390	431F7F7B	434C2722	C3487BD1	C393D318	C2BC2A8A	435E0510	43331F19	C34E42E2	C333F92B
(640)	43451BBE	43697481	C3301DA7	C3456BE1	4321CC4D	4383F312	429A36F0	C37CC0BF	C34564CD	43384459
(680)	438AAAC8	C3390795	C37007C9	432B89E8	43567587	C27F1ED7	C37A1A92	C33D60BC	434901ED	C31658EB
(720)	C3375BF8	C34CB3E1	4343A88E	43A164E2	C3497C6E	C340DF8B	428D312E	435002FC	432B3849	C35BAE0E
(760)	C3461554	43468123	437104F8	C330B432	C365BAE3	43158DD6	43752523	C223E030	C3896E7A	C3462205
(800)	4362C578	437653FE	42DD33A0	C36A2059	4326B337	43409AD7	C2641112	C34702CA	C34489CE	4373C2DE
(840)	C22320CB	C3465909	C31CDBFE	C2E2DE60	435933B9	C26CDC60	C357A423	42C637D0	43617829	42B8BFBE
(880)	C3701976	C2BA6F00	4357C0C4	43416453	C3284E51	C32F69FD	4272CA99	436F88FC	41638080	C3613C25
(920)	C330DC4E	432C3447	4371DB4A	C354B9C8	C3565DFB	43476436	434CA76E	C34C59DD	C3853E80	4320A779
(960)	4396F4F5	431D907D	C36D4762	C34B5134	43325DEE	435F1727	C31587E8	C332FE55	4280905A	433443DC
(1000)	426804E6	C35E62B1	C310DA92	434AB4B6	4348C3F8	C317CAB3	C3715E31	43200F90	436EE8E1	C3366E72
(1040)	C37A2E1A	C2B4DCC3	4338BF26	434E2A7B	C35A3A5F	C36E8317	43672D12	4354FB46	C31F555F	C340D536
(1080)	4315911E	434E3D7F	432AA7EB	C37CE983	C31C3A82	435D0CEC	435DF202	C32BD385	C357A2D9	43464D88
(1120)	4352E103	C319ED9C	C39FC03A	434833D9	4331D6A4	42561A42	C35A46A6	C34A6A0A	434B0872	43223EFC
(1160)	C22B3CF4	C353F95E	42227F79	434CFBB7	434D1461	C35C420F	C346776B	43745C2B	43532A0E	C33EED5E
(1200)	C34E2B15	C29A0CD0	436888EC	43187301	C3780519	C2CA4DA0	4328CCB9	43217682	C336FD2F	C344297B
(1240)	432A47B2	43606FF8	42772960	C352F364	C31C85B7	4339B1FA	432EB65F	C33CC199	C31C7668	43568637
(1280)	432AB616	C34A89E9	C364468A	431A05E8	43604778	C2C86A7D	C3393813	C31B2062	4340SB6F	431AC5E3
(1320)	C37FA9EB	C33653DE	4373E111	437A16B9	426E8425	C365F7CC	C33B0393	4363ED52	431C6507	C3612559
(1360)	C32C52D6	434E4743	435C1F97	C332067A	C3640836	4324C497	4355BBD6	C321012F	C347F17E	C332E3AC
(1400)	433F5F1D	434EB933	C31F3682	C3378737	431AD95E	43570198	C26FD9B5	C35CDEBA	C3455050	43685D9B
(1440)	4365FEA8	C35C8D12	C37B43FC	43300396	4369CBAF	C320807E	C36FDEBB	43173339	434CC520	C317AE54
(1480)	C3460130	C3338A75	435B72AB	43431DBC	C346B6F7	C325DB83	432852ED	436E8688	4341D979	C3912E07
(1520)	C316142D	43742F28	432120DB	C34E1B08	C37DBB8F	431AC8F8	435934DE	C2960CB3	C3573397	C25F7E03
(1560)	436F2EED	434BBB48	C35160D7	C37B1081	4337478A	436CCB1F	C3152C69	C35C5BA4	C2B3CC4A	4368EE37
(1600)	C31945F7	C36304A6	C31799BB	434058CB	433DFB8B	C324630D	C366415F	434D4A53	43A3C818	C31F1F84
(1640)	C34F4BCF	C3180F19	4340203A	43160B95	C32A173A	C3583F1A	4350B7FA	4343D990	C2D7A816	C352FE39
(1680)	C31FB6AF	435C261C	C325B318	C36B8ADE	C3514955	436C9FDC	43252862	C325F4F9	C3338789	42F7EA92
(1720)	4351A27A	C2282656	C33BAED9	42BA1E00	4384DCDA	433C9C3B	C36F2E64	C3679121	43372632	43688BC5
(1760)	426641DE	C3A0A1E4	C2989BD0	43765FB6	43228A49	C33F9D98	C33AE095	4341D55A	433EA09B	C33ADF2A
(1800)	C36D4056	4285074F	4346186D	4310E50B	C344A0EC	C2ED92E0	435A7413	4345982E	C31AC665	C35EE63C
(1840)	42F9EDDF	435DA423	425A7C3A	C368C1C1	C326C320	4339C3A6	432B5161	C3362346	C3641185	434C0B0E
(1880)	43628390	C3265C03	C36E8E7D	43551913	43A350EE	C32E8FA2	C35A2D19	C32D2C75	43783E32	4356ABDB
(1920)	C346A40E	C36A3B72	427580F0	435509A5	422984B0	C382449C	C34E77E7	435AF7BE	43318209	C32E247B
(1960)	C33D3075	432FBE1A	435D414A	C32D97B8	C34D6952	431C9EDF	4358C020	43613357	C366AC55	C32A6D86
(2000)	4331DFA0	431B797D	C337A51F	C368D15F	424086E0	43403361	C2BD3CE0	C33BEFC5	41DBD000	4359DEAD
(2040)	4350E9C3	C3720C7F	C34634B4	43374786	436C482F	C327B67E	C3798069	4317D2C2	43734C43	434C3401
(2080)	C35F4083	C336C31C	43504E1D	42EB23A0	C31F8942	C36A9053	432598A3	43918C6A	C33F2C05	C37079DF
(2120)	C329DA1F	4359E9D2	435B6DF4	C32E3D5E	C35BEA60	431A8E11	4363C761	C31D81DA	C35070E9	431C6362
(2160)	4348F99C	43351B3A	C31DBD51	C360FE62	43384366	432C6695	C352B84F	C34D70EA	C324099F	4352B7AF
(2200)	431FF711	C3785732	C32159F9	436AB7A2	434EFA53	C3432364	C3404525	432BAABF	438362BF	C3136134
(2240)	C3597887	43127268	434B33AC	4327D5E3	C36871C7	C3327D8C	431B19B6	4383CC10	C31D3A5B	C37DE7A6
(2280)	431D486C	434D1D8B	4369DAC4	C35E5FBE	C3583307	43682DC2	436DAEC0	C360878C	C37EA11E	424797E0

Requesters receive Ascii List of 1st Record & Hex dump the Last 4 records

REQ.AGENT	RD#	ACQ. AGENT
LDM	VOO73	JLJ

VOYAGER 2 RADIO OCCULTATION BY NEPTUNE/TRITON

77-076A-02G

THIS DATA SET CONSIST OF 10 NINE TRACK, 6250 BPI, MULTI FILE TAPES. EACH TAPE CONTAINS ASCII DOCUMENTATION FILES FOLLOWED BY SEVERAL BINARY FILES. THE TIME SPANS AND NUMBER OF FILES ARE LISTED BELOW.

D#	C#	FILES		TIME SPANS
D-82438	C-27863	23	8/25/89	06:56:02 - 09:44:02
D-82439	C-27864	23		06:56:02 - 09:44:02
D-82440	C-27865	14		13:24:02 - 14:12:02
D-82441	C-27866	17		07:40:01 - 09:20:01
D-82442	C-27867	10		13:23:21 - 14:16:41
D-82443	C-27868	5		07:06:00 - 08:36:00
D-82444	C-27869	5		08:36:00 - 10:06:00
D-82445	C-27870	5		11:00:00 - 12:30:00
D-82446	C-27871	5		12:30:00 - 14:00:00
D-82447	C-27872	4		14:00:00 - 15:00:00

Voyager Radio Science Experiment

Voyager 2
Radio Occultations by Neptune and Triton (25 August 1989)

Archival Data Set:
Filtered and Decimated (FND) Time Samples
from Canberra, Parkes, and Usuda

10 magnetic tapes plus documentation
9-track
6250 bpi

Forwarded to NSSDC
6 September 1990
revised: 24 Sept 90

Prepared by:
Richard A. Simpson
Center for Radar Astronomy
Stanford University
Stanford, CA 94305-4055
415-723-3525

VOYAGER - RADIO SCIENCE TEAM
Neptune Radio Occultation Data Set
(5 September 1990)

Voyager 2 was occulted by Neptune, its rings, and atmosphere on 25 August 1989 and by Neptune's satellite Triton a few hours later. During that period the spacecraft telecommunication system was used for active, remote probing of the planet and its environment at radio frequencies (wavelengths of 3.6 and 13 cm).

This documentation describes the Voyager radio science data set provided to NSSDC for archiving. These data have been partially processed (to reduce data volume, but without compromising the science value). The documentation explains how the data were acquired and how that processing has been conducted. Also included are notes which explain particular aspects of the data and calibrations/corrections which the user may wish to apply.

This documentation is included as file 0 on archive data tapes. Since some of the material (e.g., graphics) cannot be transferred electronically, hard-copy documentation is also being provided to NSSDC. The hard-copy material may also be slightly more up-to-date, so users are encouraged to use that if it is available.

The archive data set includes data from three radio receiving sites - the Canberra Deep Space Communications Complex, the Parkes Radio Astronomy Observatory, and the Institute of Space and Aeronautical Science antenna (Usuda, Japan). Canberra data are from a 70-meter antenna at both 3.6 and 13 cm wavelengths; Parkes data are from a 64-m antenna at 3.6 cm; Usuda data are from a 64-m antenna at 13 cm. All data are in the form of complex time samples with leading header records.

The data are provided after partial processing. The data have been reduced by a factor of 8 in the number of samples from the original data set by digital "filtering and decimation."

Data Acquisition and Distribution:

Radio Science data were obtained during the Neptune encounter using two antennas in Australia and one in Japan. At the Canberra Deep Space Communications Complex, data were acquired at 13 cm wavelength (S-band) using the newly upgraded 70-m diameter antenna (DSS43). Data were also acquired at 3.6 cm wavelength (X-band) using DSS43. At the Parkes Radio Astronomy Observatory (designated DSS49) data were acquired at 3.6 cm wavelength using a 64-m diameter antenna. At Usuda (designated DSS48) data were acquired at 13 cm using a 64-m diameter antenna. All receptions were in right-circular polarization, the "expected" sense.

Canberra data were acquired coherently at both wavelengths. Local oscillators referenced to a common, highly-stable time/frequency standard were used to mix all signals to 0-25 kHz baseband outputs, where they were coherently sampled and digitized. One computer-driven local oscillator (POCA) was used to track the drifting signal during the observation period. Data from the two Canberra receivers were redundantly sampled, providing a total of FOUR channels to the recording instrumentation at 50000 8-bit

samples per second each. These data were recorded on computer-compatible digital tape and shipped to JPL for distribution to Radio Science Team investigators. For logging purposes, these have been assigned tape numbers in the NC-nnnn series, where nnnn is a four-digit number. Each NC-series tape contains 8 minutes of data from all four Canberra channels; tape density is 6250 bpi. POCA data are included in header records.

The signal at Parkes was mixed to a 0-40 kHz baseband using local oscillators referenced to a highly stable time/frequency standard. One local oscillator (POCA) was computer-driven to compensate for Doppler drift during the observation period. The baseband signal was sampled and digitized. The data rate to computer-compatible tapes was 80000 8-bit samples per second. Each tape contains 400 seconds of data; tape density is 1600 bpi. POCA data are included in header records. Parkes tapes were shipped to JPL, where they were assigned numbers in the NL-nnnn series; they were then distributed to Radio Science investigators.

The signal at Usuda was mixed to a 0-40 kHz baseband using local oscillators referenced to a highly stable time/frequency standard. One local oscillator (POCA) was computer-driven to compensate for Doppler drift during the observation period. The baseband signal was sampled and digitized. The data rate to computer-compatible tapes was 80000 8-bit samples per second. Each tape contains 1800 seconds of data; tape density is 6250 bpi. POCA data are included in header records. Usuda tapes were shipped to JPL, where they were assigned numbers in the NS-nnnn series; they were then distributed to Radio Science investigators.

At each receiving site at least one backup data acquisition system was also in operation, to provide coverage in case the primary data taking equipment failed. Since the primary systems appear to have worked perfectly in all cases, the backup data have not been processed and are not discussed further here.

Filtering and Decimation (FND8 data set):

POCA tracking was sufficiently accurate that Voyager signals remained within a 10% segment of the recorded passband. It was thus possible to apply simple digital filtering techniques to reduce the number of data samples by a factor of 8 without fear of compromising science results.

Stanford implemented the digital "filtering and decimation" (FND) algorithm as follows:

1) Fourier transform 8-bit samples #0 through #1023; this provides a spectrum with 512 complex voltage values
2) In the frequency domain, extract a window of 64 consecutive values which brackets the desired signal
3) Compute the inverse transform of these 64 values; this provides a time series of 64 complex voltage values
4) Save the center 32 complex time samples
5) Fourier transform 8-bit samples #512 through #1535 and repeat the process

The frequency window (step 2) must remain fixed so long as coherent samples are desired; for Neptune the same window was used for processing the entire observing period. Processing parameters (including window definitions) are described in Appendix D. NFBIN is the processing parameter that identifies

the first frequency bin to be retained in the spectrum; for the data described here

NFBIN =	219	for Canberra S-band (13 cm) data
	201	for Canberra X-band (3.6 cm) data
	209	for Parkes data
	225	for Usuda data

DECR indicates the length of the window (DECR=8, for 1/8 of the original spectrum width in all data described here).

Computation of the inverse transform (step 3) presumes the window has been shifted to zero frequency. Parameters FFREQ and LFREQ give the first and last frequencies (respectively) -- as the window appeared in the original spectrum -- in Hz. For Canberra with NFBIN=201, the filtered time samples have undergone a frequency shift of FFREQ=9765.625 Hz compared with the original NC-series data. With Parkes data (NFBIN=209) the shift is by FFREQ=16250.0 Hz compared with data on the NL-series tapes.

Filtering introduces artifacts. The inverse transform of the windowed data includes large transients near the beginning and end of the recovered complex time series. To minimize these effects, the filtering algorithm retains only the center 32 data points (step 4). Since the second Fourier transform overlaps the first by 50% (step 5), no subsequent data are lost so long as the pattern of 50% retention and 50% overlap continues. 16 points are lost at the very beginning (reflected in parameter TREF, which is cumulative since succeeding stages of digital filtering will result in more lost data at the beginning), and at least 16 points will be lost at the end. TFIRST is also adjusted; it gives exactly the time of the first point which actually appears in the data record.

The data which appear on archival FND8 tapes are thus complex time samples starting from TFIRST. They are a filtered version of the original 8-bit samples acquired at the receiving site. Their frequency has been shifted downward by an amount FFREQ as a result of the FND process AND they represent a bandwidth only 1/8 as large as that of the original 8-bit samples. The original frequency (as seen at the antenna) may be reconstructed from knowledge of the receiver configuration and POCA values (see documentation by D.L. Gresh appended; see also Appendix H). FND8 data are fully continuous and coherent to limits set by the spacecraft ultra-stable oscillator (USO), which has an Allan variance on the order of a few parts in 10**12 [FND8 data are NOT continuous, however, between Neptune and Triton; for purposes of processing, those were treated as separate events].

Three tapes containing FND8 data from Canberra (two tapes for Neptune and one for Triton), two tapes containing FND8 data from Parkes (one each for Neptune and Triton), and five tapes containing FND8 data from Usuda (two tapes for Neptune and three for Triton) are included in the archival data set. The user wishing to focus on only the actual encounters may be able to work with a subset of these tapes; for example, only the second of the three Usuda Triton tapes may be needed to study the Triton occultation (compare Appendices A and B).

Amplitude Corrections:

No attempt has been made to correct FND8 data for amplitude variations introduced by spacecraft or ground equipment. Both could be important. As of this writing, the Radio Science Team has not received data on spacecraft attitude during the encounter, likely to be the largest source of amplitude variation. Also, during the Triton part of the encounter an apparent severe ionospheric storm was observed at Usuda, causing strong signal fluctuations; there may be no way to correct for this effect. Ground antennas are believed to have operated well, contributing only small errors.

Further Information:

For further information or clarification, see the references below or contact Dick Simpson (415-723-3525) or G. Leonard Tyler (415-723-3535) at Center for Radar Astronomy, Stanford Electronics Laboratories, Stanford University, Stanford, CA 94305-4055.

BIBLIOGRAPHY

Tyler, G.L., et al., "Voyager Radio Science Observations of Neptune and Triton," SCIENCE, 246, 1466-1473, 1989.

Voyager Radio Science Support Team, "Voyager 2 Radio Science: Neptune Encounter Operations Plan," Project Document 618-862 Volume 1, JPL Document D-5686, 17 July 1989.

Tyler, G.L., et al., "Voyager 2 Radio Science Observations of the Uranian System: Atmosphere, Rings, and Satellites," SCIENCE, 233, 79-84, 1986.

Simpson, R.A., et al., "Saturn's Rings: Voyager 1 Occultation Experiment Results," IEEE TRANSACTIONS, GE-22, 656-665, 1984.

APPENDIX A
Data Track

The charts which follow provide a table of contents to the archive data set. Shown down the left side are tape:file numbers for the tapes in the data set. Middle columns indicate the source of the data -- in terms of time and original tape numbers. The right column gives the corresponding archive data tape at Stanford (not of much interest to the general user).

The first three tapes contain FND8 data from Canberra -- one tape containing DSS43 Neptune S-band data, one tape containing DSS43 Neptune X-band data, and one tape containing Triton S- and X-band data. The next tape contains Parkes Neptune X-band data, and the fifth tape contains Parkes Triton X-band data. The next two tapes contain Usuda Neptune S-band data; Usuda Triton S-band data are stored in the last three tapes.

Column Headings:

"These Data" refer to the present set of archival tapes; entries are given in tape:file format. Note that file numbers start from zero.

"Nominal Sample Times" denote the approximate time of the first and last sample in each file. The user should obtain the exact times (processing parameter TFIRST; see Appendix D) from the header record in each file. "Start (sec)" is given in seconds from 0 h on 25 August 1989; times in UTC are given with respect to a 24-hour clock. All times are earth receive times.

"Orig Tape Number" gives the corresponding NC-, NL-, or NS-series tape containing the original data samples as distributed to Radio Science Team investigators.

The final column lists the Stanford archival tape from which these data were derived. PREPFND is the program which generates FND8 data. Information in this column will be of interest primarily to Stanford archivists. PREPFND output tapes are in Data General DUMP_II format; consult Stanford personnel regarding data in the more portable COPY format, if needed.

General Tape Format:

File 0 of each tape contains a partial copy of this documentation (see Appendix C for format). Some of the material was not available in a format suitable for transfer in this way (graphics, and text produced elsewhere), so could not be included. The user is encouraged to obtain the hard-copy documentation, if that is available. In addition to being more nearly complete, it will have the advantage of being slightly more up-to-date, as late errors will have been detected and corrected.

The bulk of the tape will be data files. A data file consists of a header record followed by many data records, each containing complex time samples from FND8 processing. Appendix D describes the header record, while Appendix E covers the data records. Note that header and data records have been "packed" into 8192-byte physical records for more efficient storage on tape; see Appendices D and E for specifics.

At the end of each tape will be a file of POCA data; the complete POCA file (essentially 24 hours of POCA values) for the appropriate station will be included. See Appendix F for more information on POCA file format.

Formats of character, integer, and floating point numbers are described in Appendix G.

TAPES 1-3: FND8 Data from Canberra

DSS43 Neptune S-band data (70-meter antenna; 13 cm wavelength)

These Data (tape:file)	Nominal Sample Times Start (sec)	Start (UTC)	End (UTC)	Orig Tape Number (NC)	PREPFND Output # (SCRA)
1:0	This documentation file				
:1	24962	06:56:02	07:04:02	0596	0877:0
:2	25442	07:04:02	07:12:02	0597	:1
:3	25922	07:12:02	07:20:02	0598	:2
:4	26402	07:20:02	07:28:02	0599	:3
:5	26882	07:28:02	07:36:02	0600	:4
:6	27362	07:36:02	07:44:02	0601	:5
:7	27842	07:44:02	07:52:02	0602	:6
:8	28322	07:52:02	08:00:02	0603	:7
:9	28802	08:00:02	08:08:02	0604	:8
:10	29282	08:08:02	08:16:02	0605	:9
:11	29762	08:16:02	08:24:02	0606	:10
:12	30242	08:24:02	08:32:02	0607	0878:0
:13	30722	08:32:02	08:40:02	0608	:1
:14	31202	08:40:02	08:48:02	0609	:2
:15	31682	08:48:02	08:56:02	0610	:3
:16	32162	08:56:02	09:04:02	0611	:4
:17	32642	09:04:02	09:12:02	0612	:5
:18	33122	09:12:02	09:20:02	0613	:6
:19	33602	09:20:02	09:28:02	0614	:7
:20	34082	09:28:02	09:36:02	0615	:8
:21	34562	09:36:02	09:44:02	0616	:9
:22	DSS43 POCA data (file NC.NEP)				

DSS43 Neptune X-band data (70-meter antenna; 3.6 cm wavelength)

These Data (tape:file)	Nominal Sample Times Start (sec)	Start (UTC)	End (UTC)	Orig Tape Number (NC)	PREPFND Output # (SCRA)
2:0	This documentation file				
:1	24962	06:56:02	07:04:02	0596	0877:0
:2	25442	07:04:02	07:12:02	0597	:1
:3	25922	07:12:02	07:20:02	0598	:2
:4	26402	07:20:02	07:28:02	0599	:3
:5	26882	07:28:02	07:36:02	0600	:4
:6	27362	07:36:02	07:44:02	0601	:5
:7	27842	07:44:02	07:52:02	0602	:6
:8	28322	07:52:02	08:00:02	0603	:7
:9	28802	08:00:02	08:08:02	0604	:8
:10	29282	08:08:02	08:16:02	0605	:9
:11	29762	08:16:02	08:24:02	0606	:10
:12	30242	08:24:02	08:32:02	0607	0878:0
:13	30722	08:32:02	08:40:02	0608	:1
:14	31202	08:40:02	08:48:02	0609	:2
:15	31682	08:48:02	08:56:02	0610	:3
:16	32162	08:56:02	09:04:02	0611	:4
:17	32642	09:04:02	09:12:02	0612	:5
:18	33122	09:12:02	09:20:02	0613	:6
:19	33602	09:20:02	09:28:02	0614	:7
:20	34082	09:28:02	09:36:02	0615	:8
:21	34562	09:36:02	09:44:02	0616	:9
:22	DSS 43 POCA data (file NC.NEP)				

DSS43 Triton S-band data
(70-meter antenna; 13 cm wavelength) (files 1-6)
DSS43 Triton X-band data
(70-meter antenna; 3.6 cm wavelength) (files 7-12)

These Data (tape:file)	Nominal Sample Times Start (sec)	Start (UTC)	End (UTC)	Orig Tape Number (NC)	PREPFND Output # (SCRA)
3:0	This documentation file				
:1	48242	13:24:02	13:32:02	0634	0879:0
:2	48722	13:32:02	13:40:02	0635	:1
:3	49202	13:40:02	13:48:02	0636	:2
:4	49682	13:48:02	13:56:02	0637	:3
:5	50162	13:56:02	14:04:02	0638	:4
:6	50642	14:04:02	14:12:02	0639	:5
:7	48242	13:24:02	13:32:02	0634	0879:0
:8	48722	13:32:02	13:40:02	0635	:1
:9	49202	13:40:02	13:48:02	0636	:2
:10	49682	13:48:02	13:56:02	0637	:3
:11	50162	13:56:02	14:04:02	0638	:4
:12	50642	14:04:02	14:12:02	0639	:5
:13	DSS43 POCA data (file NC.NEP)				

TAPES 4-5: FND8 Data from Parkes (Tape 4: Neptune; Tape 5: Triton)

These Data (t:f)	Nominal Sample Times Start (sec)	Start (UTC)	End (UTC)	Orig Tape Number (NL)	PREPFND Output # (SCRA)
4:0	This documentation file				
:1	27601	07:40:01	07:46:41	0582	0883:0
:2	28001	07:46:41	07:53:21	0583	:1
:3	28401	07:53:21	08:00:01	0584	:2
:4	28801	08:00:01	08:06:41	0585	:3
:5	29201	08:06:41	08:13:21	0586	:4
:6	29601	08:13:21	08:20:01	0587	:5
:7	30001	08:20:01	08:26:41	0588	:6
:8	30401	08:26:41	08:33:21	0589	:7
:9	30801	08:33:21	08:40:01	0590	:8
:10	31201	08:40:01	08:46:41	0591	:9
:11	31601	08:46:41	08:53:21	0592	:10
:12	32001	08:53:21	09:00:01	0593	:11
:13	32401	09:00:01	09:06:41	0594	:12
:14	32801	09:06:41	09:13:21	0595	:13
:15	33201	09:13:21	09:20:01	0596	:14
:16	DSS49 POCA data (file NL.NEPF)				
5:0	This documentation file				
:1	27601	13:23:21	13:30:01	0606	0879:0
:2	28001	13:30:01	13:36:41	0607	:1
:3	28401	13:36:41	13:43:21	0608	:2
:4	28801	13:43:21	13:50:01	0609	:3
:5	29201	13:50:01	13:56:41	0610	:4
:6	29601	13:56:41	14:03:21	0611	:5
:7	30001	14:03:21	14:10:01	0612	:6
:8	30401	14:10:01	14:16:41	0613	:7
:9	DSS49 POCA data (file NL.NEPF)				

TAPES 6-10: FND8 Data from Usuda
(Tapes 6,7: Neptune; Tapes 8-10: Triton)

These Data (t:f)	Nominal Sample Times Start (sec)	Start (UTC)	End (UTC)	Orig Tape Number (NS)	PREPFND Output # (SCRA)
6:0	This documentation file				
:1	25560	07:06:00	07:36:00	0121	0880:0
:2	27360	07:36:00	08:06:00	0122	:1
:3	29160	08:06:00	08:36:00	0123	:2
:4	DSS48 POCA file (file NS.NEP.1SEC)				
7:0	This documentation file				
:1	30960	08:36:00	09:06:00	0124	:3
:2	32760	09:06:00	09:36:00	0125	0873:0
:3	34560	09:36:00	10:06:00	0126	:1
:4	DSS48 POCA file (file NS.NEP.1SEC)				
8:0	This documentation file				
:1	39600	11:00:00	11:30:00	0129	0881:0
:2	41400	11:30:00	12:00:00	0130	:1
:3	43200	12:00:00	12:30:00	0131	:2
:4	DSS48 POCA file (file NS.NEP.1SEC)				
9:0	This documentation file				
:1	45000	12:30:00	13:00:00	0132	0881:3
:2	46800	13:00:00	13:30:00	0133	0882:0
:3	48600	13:30:00	14:00:00	0134	:1
:4	DSS48 POCA file (file NS.NEP.1SEC)				
10:0	This documentation file				
:1	50400	14:00:00	14:30:00	0135	0882:2
:2	52200	14:30:00	15:00:00	0136	:3
:3	DSS48 POCA file (file NS.NEP.1SEC)				

APPENDIX B
Significant Events

The chart below shows significant events for Radio Science in the Voyager Neptune encounter timeline, extracted from the encounter Sequence of Events. Times are earth receive time (UTC), 25 August 1989, and are for the PREDICTED event (no attempt has been made to correct to OBSERVED times).

07:01:02	S-band telemetry modulation off (-4.8 dB signal change)
07:02:02	X-band telemetry modulation off(-12.3 dB signal change)
07:14:52	Begin mini-ASCAL
07:22:53	End mini-ASCAL
07:26:03	Two-way non-coherent (TWNC) off
07:42:03	TWNC on
08:01:38	Start ring/earth occultation (71000 km boundary)
08:01:42	Neptune closest approach
08:07:57	Begin HGA limbtrack maneuver
08:08:06	End inbound ring occultation
08:08:06	Begin Neptune/earth occultation
08:56:52	End Neptune/earth occultation
08:56:52	Start Ring/earth occultation (outbound)
08:56:54	End HGA limbtrack maneuver
09:05:56	End ring/earth occultation (71000 km boundary)
09:20:59	Outbound ring plane crossing
09:24:30	Begin mini-ascal maneuver
09:32:30	End mini-ascal maneuver
09:38:04	X-band telemetry modulation on (-12.3 dB signal change)
09:39:04	S-band telemetry modulation on (-4.8 dB signal change)
09:39:54	Start IMC
09:43:42	End IMC
	...
13:27:17	TWNC on
13:28:17	S-band telemetry off (+4.8 dB signal change)
13:29:17	X-band telemetry off (+12.3 dB signal change)
13:45:26	Start Triton/earth occultation (predicted)
13:48:25	End Triton/earth occultation (predicted)
14:05:18	X-band telemetry on (-12.3 dB signal change)
14:06:18	S-band telemetry on (-4.8 dB signal change)

APPENDIX C
Documentation File

This documentation is reproduced as a text file in file 0 of each archival data tape. The text is packed as variable length card images, separated by ASCII line feed <LF> characters (hex 0A), in physical records that are 8192 bytes long. Characters are coded according to ASCII conventions.

NB: Although the documentation included in file 0 provides the basic information needed to use and understand the data on the tape, more complete (and, possibly, more up to date) documentation will be provided NSSDC in hard-copy form. The user is encouraged to use the hard-copy data, if that is available.

APPENDIX D
Header Record

Each data file comprises one header record followed by many data records. All records have LOGICAL record length IRECL, which for present purposes is 2048 bytes. Four logical records are packed into one physical record (8192 bytes) on the tape. Data identification and processing parameters are defined as below, with reference to the logical record.

Byte count starts from 0 in each record. "Parameter" is the mnemonic which appears in the processing program(s). "Data type" may be

C*n	Character	ASCII representation
I*n	Integer	Fixed-point representation
R*n	Real	Floating-point representation

Number of 8-bit bytes is appended to the data type. Hence, R*8 denotes 64-bit floating point numbers (double precision) and C*16 denotes a 128-bit character string (16 ASCII characters). Bit assignments for integer and real numbers are explained in Appendix G.

Bytes	Parameter	Data Type	Explanation
0- 11	DATE_EXP(3)	I*4	Experiment date (1989, 08, 25)
12- 27	OTAPE	C*16	Name of original tape (NC-, etc series)
28- 31	DSS	I*4	Antenna (Canberra = 42 or 43) (Parkes = 49)
32- 35	FREQBD	C*4	Frequency band ('S' or 'X')
36- 39	POLN	C*4	Polarization ('R' for RCP)
40- 47	FTX	R*8	Nominal transmit frequency (e.g., near 2296481018. Hz at S-band)
48- 63	PROGRAM	C*16	Program which produced present data
64- 79	VERSION	C*16	Version of that program
80- 91	DATE_PROG(3)	I*4	Date program was executed (yr, mon, dy)
92-103	TIME_PROG(3)	I*4	Time program was executed (hr, min, sc)
104-111	TREF	R*8	Reference time for processing (secs)
112-119	TFIRST	R*8	Time of first data sample in file (sec)
120-127	TLREC	R*8	Time of first sample in last record in file (sec)
128-135	DELT	R*8	Sample spacing (sec)
136-143	ASCALE	R*8	Scale factor (multiply values in file) to recover true amplitude (relative to original data samples)
144-151	FFREQ	R*8	First frequency in passband represented by data values in file (not valid after steering)
152-159	LFREQ	R*8	Last frequency in passband (not valid)
160-163	DECR	I*4	Decimation ratio from original data
164-167	NFBIN	I*4	Number of first frequency bin retained in previous digital filtering step
168-171	IRECL	I*4	Record length (bytes)
172-175	NBITS	I*4	Number of bits per complex data sample
176-255	COMMENT	C*80	Comment entered by operator (optional)
256-2047			not used

HEADER RECORD FORMAT

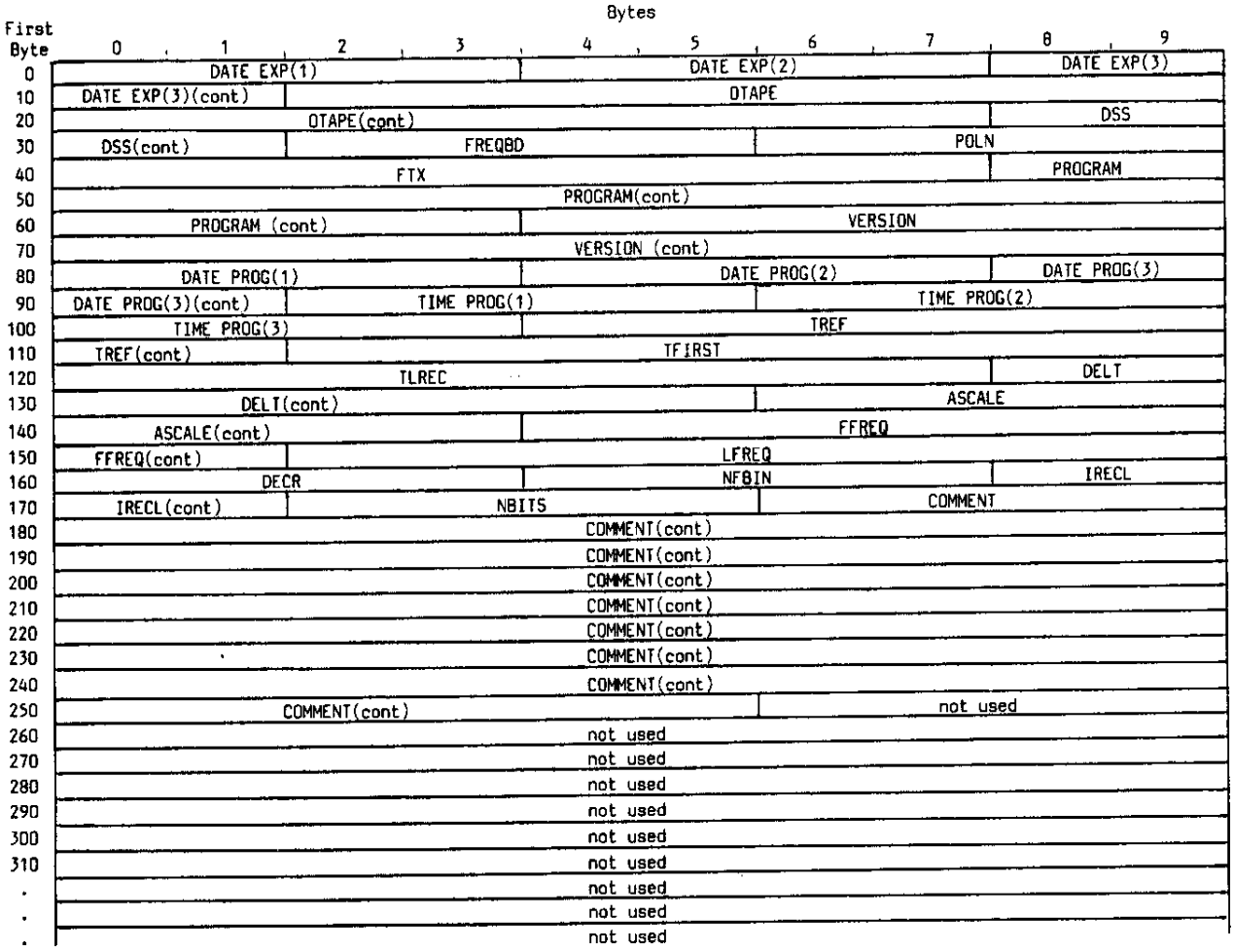

Single header record precedes data records in each data file

File Headers - Examples

```
Experiment Date                                1989/ 8/25
Original Tape                                      NC0635
Data Channel                                       43 S R
Transmit Frequency                        2296481018.000
Program Name                                 APPREPFND.PR
Version                                   APPREP 1.11, 7/8
 Executed on                         1989/11/ 1  23:33:14
Reference Time                                   .005120
Time of First Sample in First Record        48722.088960
       First Sample in Last Record          49201.976320
Sample Spacing                                   .000320
Amplitude Scale Factor                        3.906E-03
First Frequency                           10644.531250
Last Frequency                            13769.531250
Decimation Ratio                                     8
First Bin Number                                   219
Record Length (bytes)                             2048
Bits per Complex Sample                             32
Comment:
Array Plus BLOCK I/O version of V2UFND, output is fixed point
complex
```

```
Experiment Date                                1989/ 8/25
Original Tape                                      NL0607
Data Channel                                       49 X R
Transmit Frequency                        8420430461.667
Program Name                                 APPREPFND.PR
Version                                   APPREP 1.11, 7/8
 Executed on                         1989/11/ 7  14:21:55
Reference Time                                   .003200
Time of First Sample in First Record        48601.091200
       First Sample in Last Record          49000.963200
Sample Spacing                                   .000200
Amplitude Scale Factor                        3.906E-03
First Frequency                           16250.000000
Last Frequency                            21250.000000
Decimation Ratio                                     8
First Bin Number                                   209
Record Length (bytes)                             2048
Bits per Complex Sample                             32
Comment:
Array Plus BLOCK I/O version of V2UFND, output is fixed point
complex
```

Hexadecimal Dump

Early part of NL0607

(Tape 5, File 2 on NSSDC tape set)

Word number refers to 16-bit words, and the number corresponds to the first entry in the "Hex Contents" row which follows. Note that the word number is itself given in hexadecimal.

Actual header data occupy Word Nos. 0-7F. The first record is then padded out to Word No. 3FF with rather arbitrary values. Data values (16-bit real, 16-bit imaginary) begin at Word No. 400 and continue to the end of the file (not shown here).

Word No.	Hex Contents								ASCII Conversion (where possible)
0	0000	07C5	0000	0008	0000	0019	4E4C	3036	.....NL06
8	3037	2020	2020	2020	2020	2020	0000	0031	07 ...1
10	5820	2020	5220	2020	491F	5E59	27DA	AA99	X R I.^Y'...
18	4150	5052	4550	464E	442E	5052	2020	2020	APPREPFND.PR
20	4150	5052	4550	2031	2E31	312C	2037	2F38	APPREP 1.11, 7/8
28	0000	07C5	0000	000B	0000	0007	0000	000E	.....
30	0000	0015	0000	0037	3ED1	B717	58E2	1964	.....7>...X..d
38	44BD	D917	58E2	1968	44BF	68F6	9446	7385	D...X..hD.h..Fs.
40	3DD1	B717	58E2	1968	3F10	0020	00E6	712D	=...X..h?.. ..q-
48	443F	7A00	0000	0000	4453	0200	0000	0000	D?z.....DS.....
50	0000	0008	0000	00D1	0000	0800	0000	0020	.....
58	4172	7261	7920	506C	7573	2042	4C4F	434B	Array Plus BLOCK
60	2049	2F4F	2076	6572	7369	6F6E	206F	6620	I/O version of
68	5632	5546	4E44	2C20	6F75	7470	7574	2069	V2UFND, output i
70	7320	6669	7865	6420	706F	696E	7420	636F	s fixed point co
78	6D70	6C65	7820	2020	2020	2020	2020	2020	mplex
80	8000	0004	7006	6C00	0000	05CD	0000	0001	....p.l.....
88	7006	738A	F00F	8F93	700F	BA12	0000	0000	p.s.....p.....
90	7007	F9A0	003D	0000	0000	0003	7006	7472	p....=.....p.tr
98	0000	0017	7006	739C	0002	0000	7006	7338	....p.s.....p.s8
A0	E00C	E6E8	0041	7358	E00F	F484	7007	F9D4	.....AsX....p...
A8	0000	0800	0000	0001	E00C	E5F4	0000	0044	.....D
B0	8000	0000	7006	73F0	700F	5F2A	7006	732E	....p.s.p._*p.s.
B8	0000	0001	700F	BA12	FFFF	8000	7006	6C00	....p.....p.l.
C0	8000	0000	700F	5F2A	700F	5F2A	7007	F9A0	....p._*p._*p...
C8	7006	732E	F00F	5F0F	7006	6C0A	7006	732E	p.s..._.p.l.p.s.
D0	F00F	5F0B	8000	0000	700F	3FCC	7007	F2D8	.._.....p.?.p...
D8	7007	F2D8	7006	732A	700F	4650	7006	74A2	p...p.s*p.FPp.t.
E0	7007	F2D8	7007	F2A4	E00F	E68D	8000	0002	p...p.....
E8	0000	05C7	0000	0001	7006	732E	7006	741C	.....p.s.p.t.
F0	7007	F2A4	7006	740C	F00F	C550	7007	F2D8	p...p.t....Pp...
F8	7006	41AE	0089	740C	F00F	C530	700F	C5BF	p.A...t....0p...
100	0000	0006	7006	741E	7006	741C	8000	0002	....p.t.p.t.....
108	0000	0002	0000	003B	7007	F2A4	7006	7418	.....;p...p.t.
110	F00F	921B	0000	0000	0000	0000	0000	0000	.....
118	0000	0000	0000	0000	0000	0000	0000	0000	.....
120	0000	0000	0000	0800	0040	FFFF	0001	FFFF	.....@.....
128	0003	0000	FFFF	0003	0001	0001	FFFF	0000	.....

```
130  0000  FFFF  0000  FFFF  0000  6C0A  0000  0003  .........l.....
138  7006  734A  0000  0000  0000  0000  00C3  C7C9  p.sJ............
140  8789  A739  0004  B409  700F  E99B  7006  747C  ...9....p...p.t|
148  0000  0000  0000  0000  0000  0000  0000  0000  ................
150  8000  0000  8000  4000  3A44  4953  4B32  3A44  ......@.:DISK2:D
158  3234  305F  5632  4E3A  4E4C  3036  3037  0000  240_V2N:NL0607..
160  000F  BA16  7006  7418  0000  0000  0000  0001  ....p.t.........
168  8000  0000  0000  0001  700F  BA16  7006  41B8  ........p...p.A.
170  7006  7418  700F  BA16  7006  6C0A  7006  41B8  p.t.p...p.l.p.A.
178  7006  7418  700F  BA12  0000  0000  0000  0000  p.t.p...........
180  0000  0000  0000  0000  0000  0000  0000  0000  ................
188  0000  0000  0000  0000  7006  744C  0000  0000  ........p.tL....
190  7006  74C6  7006  74CA  7006  74A2  7006  44C2  p.t.p.t.p.t.p.D.
198  8000  0004  0000  0000  700F  BA16  7006  744C  ........p...p.tL
1A0  7006  74B6  F00F  C593  700F  C5BF  8000  0000  p.t.....p.......
1A8  7006  6C00  FFFF  8000  7006  6C00  7006  74B2  p.l.....p.l.p.t.
1B0  F00F  C48E  7006  6C0A  7006  41B8  7006  74B2  ....p.l.p.A.p.t.
1B8  F00F  C481  700F  C5BF  0000  0000  0000  0000  ....p...........
1C0  0000  0000  0000  0000  0000  0000  0000  0000  ................
1D0  0000  0000  0000  0000  0000  0001  0000  0000  ................
1D8  700F  3182  7006  73B6  0000  0000  700F  3182  p.1.p.s.....p.1.
1E0  7006  73B6  0000  003C  7007  FE46  7007  F9A0  p.s....<p..Fp...
1E8  8000  0001  0000  6002  0000  0001  7007  F9A0  ......`.....p...
1F0  7006  73B6  F00F  3182  7006  73B6  F00F  316B  p.s...1.p.s...1k
1F8  F00F  315B  0000  000C  7007  FE46  7006  752C  ..1[....p..Fp.u,
200  0000  0000  0000  0000  0000  0000  0000  0000  ................
```

**** (padding to end of logical record) ****

```
400  0E09  0C57  EF82  E774  FE06  2034  0EB3  E6B6  ...W...t.. 4....
408  F130  0243  1C28  FFFB  EE54  F839  0DE8  1C61  .0.C.(...T.9...a
410  F0C8  E0D7  F889  1998  0CBD  F607  EF2D  00E5  .............-..
418  115B  01C0  EFB7  EF5E  0307  17EC  1483  E650  .[.....^.......P
420  ED66  119E  1041  EDDC  EF54  02B4  0EE5  15EC  .f...A...T......
428  03AC  E54C  F6B3  18FF  0AD4  EFAA  E1E1  08BF  ...L............
430  20A8  09D9  F26F  E7F9  F9F7  17AE  04E2  EF00   ....o..........
438  F324  13D4  1DB6  FFF6  F201  FB0F  0CAF  0085  .$..............
440  FE4D  EB2A  ED62  139A  0A4F  F264  ED39  029A  .M.*.b...O.d.9..
448  1965  FE5A  E9EB  FEA6  0771  0A7A  F74B  F601  .e.Z.....q.z.K..
450  02C6  1A8B  135A  F047  E51A  F56D  17FF  0E75  .....Z.G...m...u
458  F8F3  E4E6  0097  1966  03C7  EA6E  F2DB  0B99  .......f...n....
460  1682  02B3  E2E7  F1B9  0CB4  0F16  FE04  E59D  ................
468  FCFC  2A59  1076  F2A0  F3DB  0390  160C  0EBE  ..*Y.v..........
470  F39B  EE80  F5AB  1669  068C  E2E6  F093  11E9  .......i........
478  0D32  EF86  F008  F73B  0B64  07B0  F9E8  ED6B  .2.....;.d.....k
480  00E0  0A9F  0DB7  F759  E93C  03D2  1B3A  085A  .......Y.<...:.Z
488  E885  022B  1189  18CE  059F  E6F7  F1B6  1D07  ...+............
490  0DCF  F5B1  EA4D  04D4  1647  F2D9  FD4A  EDE2  .....M...G...J..
498  F2BB  1409  1600  E759  E7DE  0E9E  1414  01D4  .......Y........
4A0  EEAD  F446  108F  0D33  FD61  F130  EF4F  2438  ...F...3.a.0.O$8
4A8  0F4D  F367  F37D  037E  1736  0732  F38E  E778  .M.g.}.~.6.2...x
4B0  FC72  1117  FE99  E853  F38A  136A  21A8  EAC9  .r.....S...j!...
4B8  EBB5  FF02  044B  04A2  F64F  ED6A  01BB  15B4  .....K...O.j....
4C0  02C7  F92A  E7F3  06D8  1A6E  0BFB  F5A6  F754  ...*.....n.....T
4C8  0AB3  18EB  04B9  E333  EDF2  144F  2357  F3E1  .......3...O#W..
4D0  E8C1  006D  0E33  0858  E9B9  EC76  FDF9  0BD5  ...m.3.X...v....
4D8  0BF2  F693  E1F5  FAA8  1C2B  0FC8  FB9E  FA0A  .........+......
4E0  127F  1740  F831  E37A  EE9D  17EA  1A68  ED56  ...@.1.z.....h.V
```

```
4E8  E2A0  FD79  1BCC  0792  F7FD  ED15  F829  12A4  ...y.........)..
4F0  0532  F202  F562  1202  15EA  F3F8  EDF9  046A  .2...b.........j
4F8  05BC  0DB0  FDA9  EBBF  F52D  1109  0704  EDE5  .........-......
500  ED34  13AD  0D16  F9B6  F08E  F7E5  0D6E  07DA  .4...........n..
508  0687  EAD0  F8BF  22AD  1818  F9D2  E9C2  034B  ......".........K
510  1417  FCB1  F959  F086  FF13  12D2  106B  E04E  .....Y.......k.N
518  E5F9  0824  14B0  FBB1  EC1F  F3CA  126D  1E8C  ...$.........m..
520  FB02  F27B  F2AA  1D63  0FD2  F999  E491  00A7  ...{...c........
528  1005  FC7F  FA52  F175  0BE1  1476  0E32  E35C  .....R.u...v.2.\
530  EC56  0F52  0B9F  F96D  E832  F490  0CAA  0E83  .V.R...m.2......
538  FC0A  E59C  FE61  1897  0A09  F5D5  EA70  0929  .....a.......p.)
540  1721  0BBC  E816  EE72  11AD  0CE3  0C2C  E8EC  .!.....r.....,..
548  ECFB  177A  1597  F815  E8B1  F9E7  1375  0C1C  ...z.........u..
550  EE2E  EBC2  010B  1C12  1517  EB4D  DF43  0DB7  ...........M.C..
558  271F  007C  E95F  F187  10DB  12AB  F9DF  EE1E  '..|._..........
560  F5E5  157E  055E  F0DA  F1DF  028D  0A4F  04DC  ...~.^.......O..
568  F52B  FA45  FADC  1678  076A  E232  F440  0A1B  .+.E...x.j.2.@..
570  2638  F11F  D740  FD20  1425  0727  FE66  F36B  &8...@. .%.'.f.k
578  F911  2564  117A  F92E  F945  02F8  0990  FF59  ..%d.z...E.....Y
580  F660  EE11  1234  2015  0115  E23D  E219  11EB  .`...4 ....=....
588  1343  ED3A  E7AD  00A2  0C51  04CA  FCFF  EEAD  .C.:.....Q......
590  F7F6  14BC  132D  F76B  EAB3  09F8  1892  FF57  .....-.k.......W
598  F2D7  E8B2  0348  1A5B  07F3  EA29  FD26  14A7  .....H.[...).&..
5A0  120F  EF2C  E4AA  F99C  04CC  18CE  F5D4  E345  ...,...........E
5A8  0C2D  1E27  FDD8  F2A1  F345  0CC2  1C59  FAE4  .-.'.....E...Y..
5B0  EAC6  F615  11A5  0D5A  F38A  E931  FDA2  1384  .......Z...1....
5B8  0C24  F227  E3C7  0F7F  1796  0762  EF68  E785  .$.'.......b.h..
5C0  1339  165E  FCE0  E68F  EE8C  1571  1CE3  FF47  .9.^.......q...G
5C8  EE5E  FEB4  0DDE  0D96  F2F7  E3BC  036A  1799  .^...........j..
5D0  0B78  EDE2  ECA4  0ABD  1484  FD9E  EE95  EFB0  .x..............
5D8  09AC  16E6  FA65  DF05  FA72  1C94  04AF  F2CC  .....e...r......
5E0  F65E  049D  1371  0BDB  F10A  E81B  F793  22FE  .^...q........".
5E8  0569  E7E2  F592  02B7  1B15  FC18  E779  F6C8  .i...........y..
5F0  13AC  0F0C  09E8  ED7A  F5A9  20A2  0F61  EA4B  .......z.. ..a.K
5F8  EF98  03F3  0D85  FDBA  E7FB  ED0D  FA53  2115  .............S!.
600  0771  EBA8  F3C4  1597  2398  F82C  EB96  EDD6  .q......#..,....
608  0AF8  1197  F3CD  F047  FADE  23B2  12FC  EAA8  .......G..#.....
610  DEC1  0266  0FDA  030B  044C  F91C  1551  08BD  ...f.....L...Q..
618  F9E1  EBCD  EE80  13DA  1508  F102  E2B6  0558  ...............X
620  1A58  08F7  FAA2  FB8D  FB67  114F  0823  DF1E  .X.......g.O.#..
628  EC9E  134B  13C1  FE33  EB18  F638  0C81  09D9  ...K...3...8....
630  FB3E  EE35  EE7B  12FA  0FD6  F24E  FBB4  06C6  .>.5.{.....N....
638  1BAE  FAF0  F3FB  F228  FA01  2199  097B  F4AD  .......(..!..{..
640  ECA7  0EBB  15EA  F6B1  EB67  FDDE  1998  091E  .........g......
648  F381  E4DE  FF99  1700  08D8  F280  EDF7  FFD1  ................
650  0D81  018D  EBC1  F2DE  098D  14F5  06EA  E862  ...............b
658  EC5E  153A  189D  0310  EC1C  F80D  1F01  0D1C  .^.:............
660  F3A0  E8D8  FA37  1812  0507  E026  EC05  05F6  .....7.....&....
668  120B  00AF  EB8A  0470  15AF  0F38  F412  F06A  .......p...8...j
670  F2B9  19BD  17D7  F4C3  F2CF  0000  0E7A  08ED  ...........z....
678  F6F2  EDFA  05CD  1218  FCAE  DE4A  02D2  1539  ...........J...9
680  0CEF  F6E4  E1E1  F694  132C  0D83  F9DF  F227  .........,.....'
688  FBB2  150F  0A60  F0C5  ED94  04C0  12D6  0A3B  .....`.........;
690  F464  FA58  07C2  0570  06D7  ED01  E8C6  157E  .d.X...p.......~
698  1B98  F1B8  E711  0753  1113  0960  F94B  F0A1  .......S...`.K..
6A0  F858  1345  0E4D  E795  EA85  0B88  1B7B  FDC5  .X.E.M.......{..
```

**** (data values continue to end of file) ****

APPENDIX E
Data Records

Each data file on an archive data tape begins with a header record (Appendix D). All remaining records are data records. All records have LOGICAL record length IRECL=2048 bytes; four logical records have been packed into one physical record (8192 bytes) on the tape. The discussion below is with regard to the LOGICAL record only.

Each data record contains 1024 16-bit integers (I*2; see Appendix G for format). Pairs of integers comprise complex samples of signal voltage, uniformly spaced in time (DELT in the header gives the spacing; see Appendix D). There are thus 512 complex time samples per record, with the real and imaginary parts of each sample occupying 2 successive bytes.

Data samples are continuous across record boundaries; data are continuous across file boundaries except that Neptune and Triton data are not continuous with respect to each other.

APPENDIX F
POCA File

The computer-driven local oscillator (POCA) at Canberra provided a time varying signal at about 43 MHz (46 MHz at Parkes). This was multiplied and mixed so that the spacecraft signal would appear near the center of a 25 kHz (40 kHz at Parkes) baseband spectrum. Instantaneous POCA frequency and frequency rate-of-change were recorded on data tapes at integral seconds (note that only linear changes in frequency with time were permitted). The Parkes POCA file here has been "fixed," to correct artifacts of the data recording process which offset the POCA entries by up to two seconds from their nominal positions; this makes their interpretation consistent with the interpretation which applies to Canberra and Usuda values. See separate documentation by D.L. Gresh for more information on interpretation and use of POCA values. See also Appendix H for equations relating "antenna frequency" and POCA frequency.

POCA values at Usuda were recorded at 50 msec intervals. Since changes in POCA rate occurred only at even second marks, the original POCA file has been edited to include only entries at even second marks.

See Appendix A for the file which contains these POCA values. Each tape contains POCA data for the full observation period.

The POCA file is made up of 28-byte logical records, packed into 8192-byte physical records on the tape. Each file begins with a 224-byte header; the remaining approximately 2.4 Mbytes contain times, POCA frequencies, and POCA frequency rates of change.

Assignments in the POCA record header are as follows (see Appendix G for conversion of binary formats):

Bytes	Parameter	Data Type	Explanation
0- 27	TITLE	C*28	Title
28- 39	EXP_DATE(3)	I*4	Experiment date (1989, 08, 25)
40- 55			not used
56- 71	TAPE_NAME	C*16	Original tape name (NC-, etc. series)
72- 83			not used
84-111	PROGRAM	C*28	Source program name (e.g., PREP88C)
112-139	VERSION	C*28	Version of source program
140-151	DATE_RUN(3)	I*4	File creation date (yr, mon, day)
152-167			not used
168-179	TIME_RUN(3)	I*4	File creation time (hr, min, sec)
180-195			not used
196-199	TMAX	R*4	Seconds in full file (86400. sec)
200-223			not used

Most entries in the POCA header will not be of value to the general user; they simply provide documentation on when and how the POCA file was created. Part of the first tape record from the Usuda POCA file is reproduced here to illustrate the structure:

Record 0 8192 (2000 Hex) bytes

Addr (bytes)	HEX Contents								ASCII Translation
0000	504F	4341	4649	4C45	2049	4E49	5449	414C	POCAFILE INITIAL
0016	495A	4154	494F	4E3A	2020	2020	0000	07C5	IZATION: ....
0032	0000	0008	0000	0019	0000	0000	0000	0000	.....
0048	0000	0000	0000	0000	4E53	3031	3233	2020	.....NS0123
0064	2020	2020	2020	2020	2020	2020	2020	2020	
0080	2020	2020	5052	4550	3838	4920	2020	2020	PREP88I
0096	2020	2020	2020	2020	2020	2020	2020	2020	
0112	2031	2D4D	4152	2D38	3920	2020	2020	2020	1-MAR-89
0128	2020	2020	2020	2020	2020	2020	0000	07C5	....
0144	0000	000A	0000	0013	2020	2020	2020	2020	.....
0160	2020	2020	2020	2020	0000	000A	0000	0039	9
0176	0000	0016	2031	2D4D	4152	2D38	3920	2020	.... 1-MAR-89
0192	2020	2020	0001	5180	2031	2D4D	4152	2D38	..Q. 1-MAR-8
0208	3920	2020	2020	2020	2020	2020	2020	2020	9
0224	0000	0000	4729	F6AC	FFFF	FFFF	0000	0000	....G).....
0240	0000	0000	0000	0000	0000	0000	FFFF	FC18	.....
0256	0000	0000	0000	0000	0000	0000	0000	0000	.....
0272	0000	0000	0000	0000	FFFF	F830	0000	0000	.....0....
0288	0000	0000	0000	0000	0000	0000	0000	0000	.....
0304	0000	0000	FFFF	F448	0000	0000	0000	0000	.....H.....
0320	0000	0000	0000	0000	0000	0000	0000	0000	.....
0336	FFFF	F060	0000	0000	0000	0000	0000	0000	...`.....

The remaining 2.4 Mbytes of each POCA file contain data values. The assignments are as follows (see Appendix G for conversion of binary formats):

224-227	TIME_1	I*4	Time of POCA readings (msec)
227-235	FREQUENCY_1	R*8	POCA frequency at TIME_1
236-243	FREQUENCY_1C	R*8	Calculated POCA frequency at TIME_1
244-251	RATE_1	R*8	POCA rate at TIME_1
252-259	TIME_2	R*8	Time of next POCA readings
260-267	FREQUENCY_2	R*8	POCA frequency at TIME_2
268-275	FREQUENCY_2C	R*8	Calculated POCA frequency at TIME_2
276-283	RATE_2	R*8	POCA rate at TIME_2
282-291	TIME_3	R*8	Time of next POCA readings
...	...	...	...

For example the 169th record in the Usuda tape file begins as follows:

Tape Record 168 (starting count from record 0): 8192 (2000 Hex) bytes

Addr (bytes)	HEX Contents								ASCII Translation
0000	02ED	E0C0	472A	5981	9F9F	0802	0000	0000	....G*Y.....
0016	0000	0000	0000	0000	0000	0000	02ED	E4A8	.....
0032	472A	5981	9F1A	F188	0000	0000	0000	0000	G*Y.....
0048	0000	0000	0000	0000	02ED	E890	472A	5981	.....G*Y.

```
0064    9E96  DA01  0000  0000  0000  0000  0000  0000    ................
0080    0000  0000  02ED  EC78  472A  5981  9E12  C386    .......xG*Y.....
0096    0000  0000  0000  0000  0000  0000  0000  0000    ................
0112    02ED  F060  472A  5981  9D8E  ABFF  0000  0000    ...`G*Y.........
0128    0000  0000  0000  0000  0000  0000  02ED  F448    ..............H
0144    472A  5981  9D0A  9585  0000  0000  0000  0000    G*Y.............
0160    0000  0000  0000  0000  02ED  F830  472A  5981    ..........0G*Y.
0176    9C86  7DFE  0000  0000  0000  0000  0000  0000    ..}.............
0192    0000  0000  02ED  FC18  472A  5981  9C02  6783    ........G*Y...g.
0208    0000  0000  0000  0000  0000  0000  0000  0000    ................
0224    02EE  0000  472A  5981  9B7E  4FFC  0000  0000    ....G*Y..~O.....
0240    0000  0000  0000  0000  0000  0000  02EE  03E8    ................
0256    472A  5981  9AFA  3981  0000  0000  0000  0000    G*Y...9.........
0272    0000  0000  0000  0000  02EE  07D0  472A  5981    ............G*Y.
0288    9A76  21FA  0000  0000  0000  0000  0000  0000    .v!.............
0304    0000  0000  02EE  0BB8  472A  5981  99F2  0B80    ........G*Y.....
0320    0000  0000  0000  0000  0000  0000  0000  0000    ................
0336    02EE  0FA0  472A  5981  996D  F3F9  0000  0000    ....G*Y..m......
```

The first four bytes (hex 02ED E0C0) can be translated as the time 49144000 msec. The corresponding POCA value is hex 472A 5981 9F9F 0802. Note that "calculated" and "rate" values have been set to zero in this example. Calculated POCA frequencies were used diagnostically to check data taking software, and have no use in data reduction; they are typically not included in POCA files. Rates are produced by some data taking equipment and not by others; in this case, no rates have been provided. The POCA header and the section of the Usuda POCA file around 49144 seconds have been translated below:

```
POCAFILE INITIALIZATION:
 Experiment data   1989: 8:25
 Input tape        NS0123
 Program           PREP88I
 Version            1-MAR-89
 This file created 1989:10:19
                    10:57:22
 Seconds in this file:    86400
 Time spacing between entries:     1000 msec
```

File contents -- Null records will not be listed:

Record	Time	POCAREAD	POCACALC	POCARATE
49141	49140000	44406810.105320	.000000	.000000
49142	49141000	44406810.073072	.000000	.000000
49143	49142000	44406810.040823	.000000	.000000
49144	49143000	44406810.008575	.000000	.000000
49145	49144000	44406809.976326	.000000	.000000
49146	49145000	44406809.944078	.000000	.000000
49147	49146000	44406809.911829	.000000	.000000
49148	49147000	44406809.879581	.000000	.000000
49149	49148000	44406809.847332	.000000	.000000
49150	49149000	44406809.815084	.000000	.000000
49151	49150000	44406809.782835	.000000	.000000

APPENDIX G
Data Formats

Archive tapes were generated on a Data General MV/10000 computer using Data General conventions for representing character, integer, and floating point numbers. These are explained below

Character Data:

Character data are represented using 8-bit bytes per character. Characters are coded using conventional ASCII assignments.

Integer Data:

Fixed point data are two's complement binary numbers in either 16-bit (I*2) or 32-bit (I*4) format. The range of the two types is -32768 to +32767 and -2,147,483,648 to +2,147,483,647, respectively. Integer numbers consist of a sign bit S (bit 0) and a value V (bits 1-15 or bits 1-31).

The sign bit S is zero for positive numbers, one for negative.

The value bits V are the two's complement of the corresponding positive number if S=1.

Floating Point Data:

Floating point data are normalized, sign magnitude numbers. Floating point numbers consist of a sign bit S (bit 0), an exponent X (bits 1-7), and a mantissa M. For single precision numbers (R*4) the mantissa includes bits 8-31; for double precision (R*8) the mantissa includes bits 8-63. If the mantissa is zero, the sign bit and exponent should also be zero (true zero). Floating point numbers lie within the magnitude range (5.4 10**-78) to 7.2 10**75.

The sign bit S is zero for positive numbers, one for negative.

The exponent X is an unsigned 7-bit integer in excess 64 representation. That is, X is 64 larger than the true value of the exponent. X is applied to the base 16.

The mantissa is a binary fraction. For single precision it lies in the range (1/16) to (1-2**-24); for double precision it lies in the range (1/16) to (1-2**-56).

Floating point numbers can be reconstructed by calculating

$$[-1]^{**}S * [16^{**}(X-64)] * M$$

Examples:

Hexadecimal 4512 AD50 = decimal 76501.00
Hexadecimal 472B AB11 8BE6 516E = decimal 45789462.440930

16-bit Fixed-Point Two's Complement Format

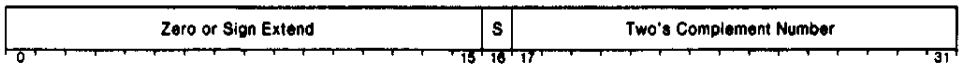

32-bit Fixed-Point Two's Complement Format

Single Precision Format

Single Precision Format

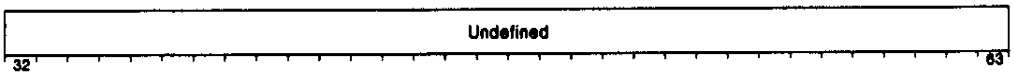

Double Precision Format (First Half)

Double Precision Format (Second Half)

APPENDIX H
POCA Equations

The following equations may be used to relate the frequency which would have been observed at the antenna (f_ant) to the frequency of a signal as it was recorded from receiver output (f_rec). To obtain the frequency as seen in a data spectrum derived from FND8 archival data the "first frequency" (FFREQ) value described in the text (see also Appendix D) must be subtracted. Appropriate FFREQ values are:

```
FFREQ = 10644.53125 Hz  (Canberra S-band; NFBIN = 219)
         9765.625   Hz  (Canberra X-band; NFBIN = 201)
        16250.      Hz  (Parkes; NFBIN = 209)
        17500.      Hz  (Usuda; NFBIN = 225)
```

These equations have been adapted from "Voyager 2 Radio Science: Neptune Encounter Operations Plan" Appendix E.

Canberra S-band (13 cm):

```
f_ant = 3*f_POCA + (790/11)*3E6 + 1.95E9 - f_rec
```

Canberra X-band (3.6 cm):

```
f_ant = 11*f_POCA - 1.1E8 + 8.05E9 - f_rec -1E5
```

Parkes:

```
f_ant = 7*f_POCA + 8.1E9 + f_rec
```

Usuda:

```
f_ant = 2*f_POCA + 2.385E9 + f_rec
```

Dick Simpson
5 September 1990

End of Documentation

Appendices I and J

The following two appendices, by D.L. Gresh and P.A. Rosen, were written to describe computations needed for reduction of Voyager data from the Uranus and Saturn encounters, respectively. With some minor modifications, they apply equally well to the case at Neptune. The discussion of how to obtain "steering" coefficients from POCA data may be particularly useful.

Documentation for First Order Steering

D. L. Gresh
Center for Radar Astronomy
Stanford University
Stanford, CA 94305-4055

July 24, 1987

First order steering removes frequency drift in radio occultation data which results from Doppler and relativistic effects.

A preliminary frequency correction is applied to the data during reception through the POCA (Programmable Oscillator Control Assembly). The reference frequency mixed with the received data is derived from the POCA, which is continuously changed to keep the signal approximately in the center of the passband. POCA frequency may, at most, be a linear function of time; at various times, its rate is changed to match more closely the drift rate of the actual signal.

First order steering removes residual drift after the POCA correction stage. The diagram below shows this process schematically; the diagram on the next page shows the shape of the residual frequency fluctuations following the reception of the data, but *before* steering has been applied.

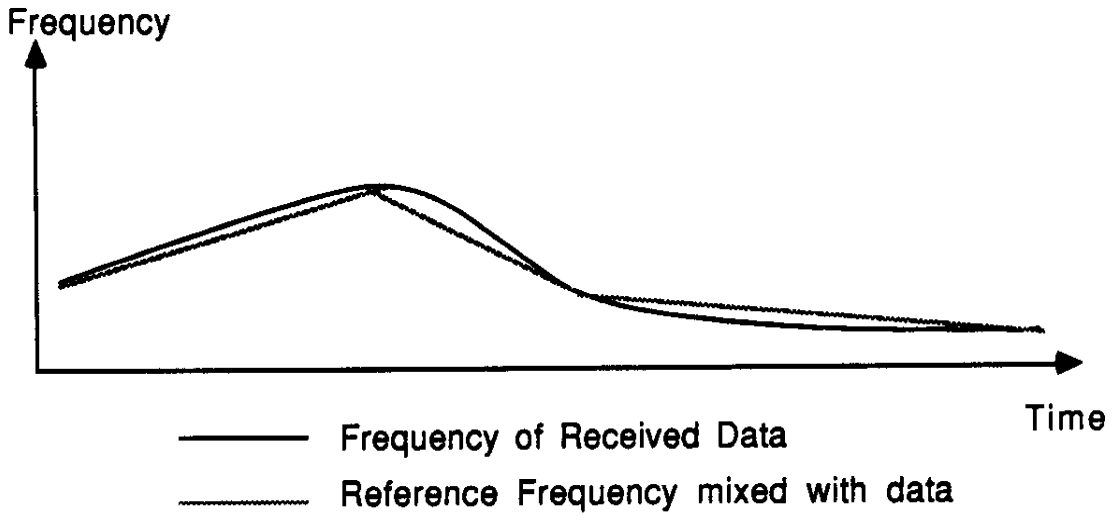

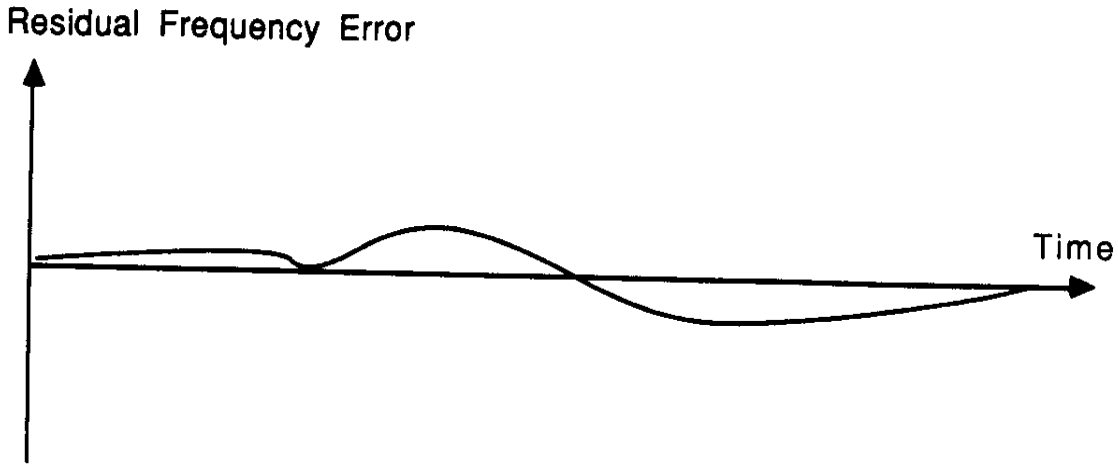

Steering, if properly accomplished, can correct for all known sources of frequency drift. It will thus reduce frequency residuals (such as those shown above) to zero. Perturbations to the propagation path, such as passage through ring material or an atmosphere, then are more easily identified and studied. If desired, even these can be removed if an accurate model for the effects is available.

The frequency of the steering signal is approximated by a polynomial over a short interval of time, typically tens to hundreds of seconds. Polynomial coefficients are changed between intervals, but without introducing discontinuities in frequency.

The first step in computing steering coefficients is calculation of the expected frequency of the received signal. The transmitted signal frequency is controlled by the spacecraft Ultra Stable Oscillator (USO); we have assumed the X-band value $f_{USO} = 8420430456.1$ Hz for the Uranus encounter period, based on Voyager engineering data. Computation of the expected signal frequency at receiving antennas on earth includes effects due to the relative motion of the spacecraft with respect to earth (Doppler effects) as well as the General and Special Relativity shifts in the signal frequency due to potential wells of the sun and planets and the velocity of the spacecraft . The current position and velocity of the spacecraft relative to other relevant bodies in the solar system are extracted from the CRS (Celestial Reference Set) tape supplied by the Navigation team at JPL (the trajectory used for first order steering was the "final" trajectory of May, 1986). A brief description of how vectors are computed from the CRS tape is given in the accompaning memo by P.A. Rosen entitled "Encounter Geometry Calculations for Ring Occultations". The observed frequency when the classical Doppler shift is taken into account is

$$f_{class}=f_{USO}(1+|V_{relobs}|/c) / (1+|V_{relsrc}|/c)$$

where c is the speed of light and $V_{relobs}=V_{ad}\bullet U_{dds}$ and $V_{relsrc}=V_{as}\bullet U_{dds}$, these vectors being defined in the PAR memo referenced above. The frequency after accounting for the combined effects of Special and General Relativity may be written as

$$f_{REL}=f_{USO}(1 + 2\phi_{src}/c^2 - v_{src}/c^2)^{1/2} / (1 + 2\phi_{obs}/c^2 - v_{obs}/c^2)^{1/2}$$

where ϕ_{src} and ϕ_{obs} are the gravitational potentials at the spacecraft and observing point, respectively, and $V_{src}=V_{as}$ and $V_{obs}=V_{ad}$. (See Gravitation and Cosmology:Principles and Applications of the General Theory of Relativity by Steven Weinberg, John Wiley and Sons, New York, 1972). Thus the observed ratio of observed to emitted frequency is given by

$$f_{obs}/f_{USO}=(f_{class}/f_{USO})(f_{REL}/f_{USO})$$

The second step in calculating steering coefficients is to determine the frequency change applied to the data by the receiving system, including the POCA. The POCA frequency and the rate of frequency change at one-second intervals were stored with the data samples on the original computer tapes generated in Australia. The POCA ramp rate was changed infrequently and then only on even seconds. For Canberra X-band data (DSS 43), the signal recorded on tape is at a frequency of

$$f_{rec}= f_{USO} + f_{DOP} -16.5 f_{POCA}-7.7GHz-150kHz$$

where $f_{DOP}=f_{obs}-f_{USO}$, and includes all Doppler and Relativity correction terms. f_{POCA} is the instantaneous POCA frequency; the constant terms result from mixing with fixed frequency local oscillators. A block diagram of the Canberra receiver system is shown below.

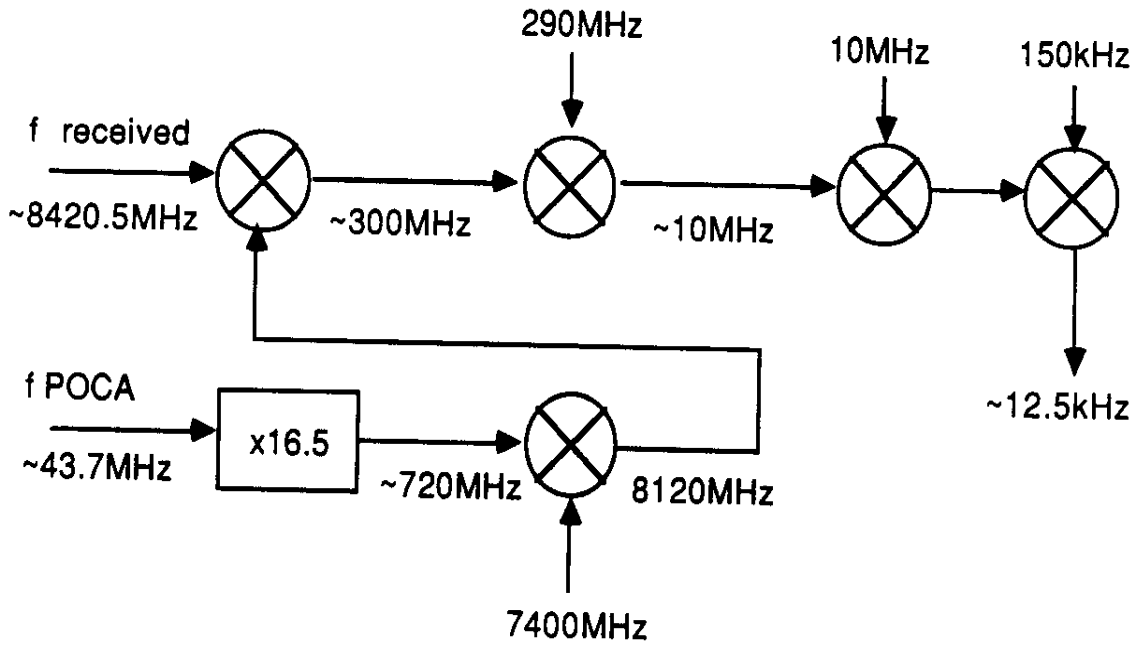

Canberra X-Band Receiver Oscillator System

For Canberra S band data, the signal recorded has a frequency of

$$f_{rec}=(3/11)f_{USO}+f_{DOP}-4.5f_{POCA}-2.1GHz-150kHz$$

The block diagram is shown below.

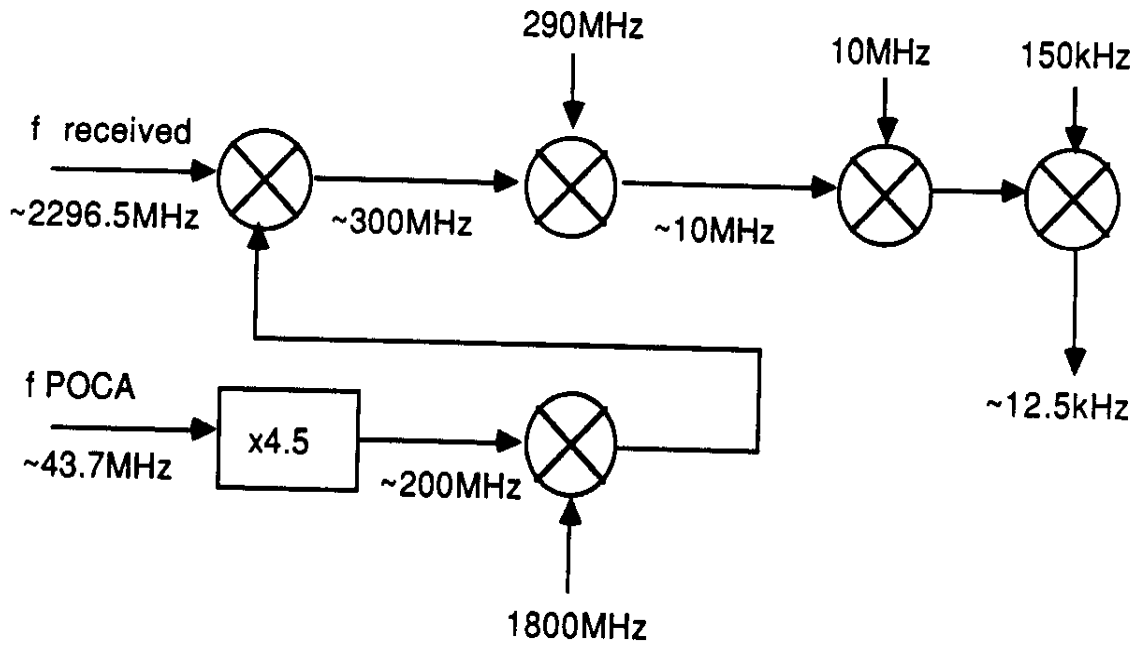

Canberra S-Band Receiver Oscillator System

The mixing system for the Parkes data is slightly different. The signal recorded has a frequency given by the equation

$$f_{rec} = f_{USO} + f_{DOP} - 7f_{POCA} - 8.1\ GHz$$

A block diagram for the Parkes receiving system is shown below.

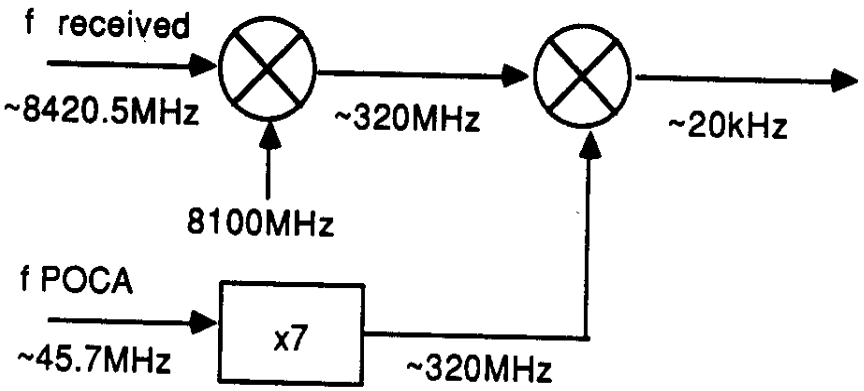

Parkes Receiver Oscillator System

At this stage we have a prediction for the frequency of the recorded signal at all times based on the transmitted frequency, Doppler shifts, and receiving system conversions. Over time intervals during which the POCA ramp rate is constant, we may approximate the recorded frequency by a third order polynomial

$$f_{rec} = C0 + C1*t + C2*(t^2) + C3*(t^3)$$

where t is the time in seconds from the last change in the value of the coefficients.

---

* Note concerning Parkes POCA values: Data acquisition systems at Parkes and Canberra differed in how POCA frequencies and ramp rates were buffered before being written to tape. The Parkes POCA values were "delayed" with respect to Canberra values. So that POCA data from the two systems could be handled in a consistent fashion we created a "corrected" POCA file for Parkes after reading the original data from tape. The corrected file was used for Parkes steering calculations, it has been included in Parkes archival data sets, and it is consistent with the documentation here.

The corrections were as follows:

1) POCA values on Parkes data tapes are always one second late; that is, if the POCA frequency is f_1 at t_1, the frequency f_1 does not appear in the tape record until t_1+1. This was corrected simply by shifting the Parkes POCA values one second earlier.

2) Regardless of the actual POCA rate at the start time, the tape record shows rate=0 until the *next* rate change. This was corrected by substituting the value $f(t_1+1)-f(t_1)$ until correct rate values appeared in the tape record.

3) After corrections 1) and 2) the rate values (but not the POCA values) are *still* delayed by one second. This was corrected by shifting the Parkes POCA rate values an additional one second earlier.

A file of steering coefficients has the following format:

C0	C1	C2	C3	t1	t2
C0	C1	C2	C3	t1	t2
C0	C1	C2	C3	t1	t2

.
.
.

where t1 and t2 are the beginning and end times over which the associated coefficients are valid. Thus each t1 is the same as the previous t2 . The frequency given by the equation above should be continuous at each time interval boundary.

Because the X- and S-band frequencies are related exactly by the factor 11/3, S- band coefficients were computed directly from the X-band coefficients.

The primary source of error in the removal of frequency residuals from the data is drift of the USO. This source of error is much larger than any due to uncertainty in velocities or positions of the spacecraft, planet and receiver. It was assumed that the USO had a constant frequency with the value given above. In fact the USO is continuously drifting in frequency. Following first order steering, typical frequency offsets from the center of the passband were on the order of a few hundreths of a hertz.

ENCOUNTER GEOMETRY CALCULATIONS FOR RING OCCULTATIONS

Processing of radio occultation data requires the use of very precise values of certain distances and angles. These geometric quantities include, among others, the point at which the radio beam intercepts the planet's equatorial (and ring) plane, the distance of the spacecraft from the ring plane measured along the spacecraft- earth line, and the angle of incidence of the radio beam on the ring plane.

To compute these quantities as functions of time, the positions and velocities of the Earth, Sun, occulting planet, and occulted spacecraft must be known to high precision. For Voyager encounters, the JPL Voyager Navigation Team provides this information. The purpose of this document is to describe how the necessary radio occultation geometric parameters are subsequently derived. It is based on existing software and serves to document the software as well as the derivation.

The CRS Tape

The Celestial Reference System (CRS) tape which is provided by the JPL NAV team contains the position and velocity vectors of an arbitrary number of celestial bodies with respect to another body, as a discrete function of time. The number of bodies and the designated reference body depends on the version of the tape. The sampling rate of the vectors can also vary. Usually close to encounter, each time step ranges from 10 seconds to 2 minutes, and time is measured from epoch **1950.0** in **Ephemeris Seconds (ET)**. Since encounter events are logged in **Universal Time (UT)**, the correction factor ΔT must be applied to all encounter event times to reconcile them with body motions (see below). The vectors on the tape are usually given relative to the spacecraft. For occultation calculations, heliocentric or planetocentric calculations are preferred so the reference body is usually changed immediately to be the occulting planet. These vectors are stored in a disk file on a computer.

Symbol Conventions

The symbol $\mathbf{R}_{ab}(t)$ represents a position vector measured *from* point a *to* point b, where both a and b are celestial bodies moving in time with respect to some inertial frame and distance is measured from the center of mass of the bodies. In this representation, the positions of both a and b correspond to time t. For a and b measured each at a different time, the representation $\mathbf{R}_{ab}(t_1, t_2)$ obtains, where a is at time t_1 in its orbit and b at t_2. Velocities are represented similarly with **R** replaced by **V**, unit vectors with **R** replaced by **U**.

Specific letters are used for the subscripts a and b to represent the encounter celestial bodies. They are as follows:

e = Earth

a = Sun

s = Spacecraft

o = Occulting Planet

p = Point of Photon – Ringplane Intersection

d = Receiving Antenna

All vectors are represented in the EME 1950.0 coordinate system unless otherwise stated. Vectors in a planet-date system will have a superscript o as well as subscripts. As an example of the worst possible case, the unit vector which represents the direction from the planet at transmit time t_x to the earth at receive time t_r, in the planet-date coordinate system, would be $\mathbf{U}^o_{oe}(t_x, t_r)$. The cartesian component of this vector along the x-axis of this coordinate system would be $\mathbf{U}^o_{x\ oe}(t_x, t_r)$. Usually the full notation is not required. The matrix which transforms a vector from EME 1950.0 coordinates to planet-date coordinates is notated by $\mathbf{T}_{eo}$. The matrix is easily computed from the planet's rotation pole which is defined in the EME 1950.0 system. Before an encounter, the best possible estimate of the pole is used. After an encounter, refined estimates can be obtained from a variety of methods (*v., e.g.* Simpson *et al.* 1983).

Receive Time Vectors

Events are logged at a receiving station as a function of the receive time t_{rv} in UTC. Ephemeris time, which is used as the time base for the CRS vectors, is given by $t_{re} = t_{rv} + \Delta T$. Corresponding to ground events are spacecraft events which occurred some time before this, differing by the time for light to travel between the transmitter and the receiver. Crucial vectors at t_{rv} are the position and velocity of the Earth receiving station(s) relative to Earth's center. Vectors returned from the CRS file are $\mathbf{R}_{oe}$, $\mathbf{V}_{oe}$, $\mathbf{R}_{oc}$, $\mathbf{V}_{oc}$, $\mathbf{R}_{oa}$, and $\mathbf{V}_{oa}$, labeled in t_{re}.

Receiving Station Vectors

The positions of the receiving stations are given in terms of latitude β, west longitude Λ, and distance ρ from the antenna perpendicular to the rotation axis of the Earth. The vector positions and velocities are obtained in two steps. The first step utilizes formulas in the Explanatory Supplement to the AENA to compute the position and velocity in

EME-date coordinates. Define the hour angle of the antenna at the receive time instant as γ. Then

$$\mathbf{R}_{ed}^{d} = (\rho\cos\gamma\,,\ \rho\sin\gamma\,,\ \rho\tan\beta)$$

and

$$\mathbf{V}_{ed}^{d} = (-|\mathbf{V}_{ed}|\sin\gamma\,,\ |\mathbf{V}_{ed}|\cos\gamma\,,\ 0)$$

where the superscript d signifies that the vectors are in EME-date coordinates. The hour angle is derived as follows.

The Julian day number of January 0.5, 1900 is $J_0 = 2415020$ and is used as a reference day. The day number of the encounter is denoted J. The Greenwich mean sidereal time of 0^{h} UT on encounter day is

$$T_{gms}(0^{\mathrm{h}}\mathrm{U.T.}) = 6^{\mathrm{h}}38^{\mathrm{m}}45^{\mathrm{s}}.836 + 8640184^{\mathrm{s}}.542D + 0^{\mathrm{s}}.0929D^2$$

where $D = (J - J_0)/36525$. Note that 0^{h} U.T. corresponds to a half-integral day (*e.g.* 2522222.5). The local sidereal time T_{ls} at midnight U.T. is

$$T_{ls}(0^{\mathrm{h}}\mathrm{U.T.}) = T_{gms}(0^{\mathrm{h}}\mathrm{U.T.}) - \Lambda$$

where longitude is positive in the west direction and is measured in hours, minutes and seconds at a time rate of 1 hour to 15°. The amount of sidereal time T_S corresponding to U.T. measure past midnight T_U on encounter day is

$$T_S = \frac{T_U T_{SD}}{86400}$$

where T_U, T_S, and T_{SD} are measured in seconds and T_{SD} is the second equivalent of the time $24^{\mathrm{h}}3^{\mathrm{m}}56^{\mathrm{s}}.55536$ of U.T. measure. Finally, γ is equivalent to the local sidereal time at encounter

$$\gamma = T_{ls}(T_U) = T_{ls}(0^{\mathrm{h}}\mathrm{U.T.}) + T_S$$

The magnitude of the velocity vector of the antenna $|\mathbf{V}_{ed}| = 2\pi\rho/T_{sd}$ where T_{sd} is the rotation period of the earth (*i.e.* mean sidereal day) in U.T. measure and is the second equivalent of $23^{\mathrm{h}}56^{\mathrm{m}}4^{\mathrm{s}}.09054$ very nearly.

These EME-date vectors are transformed to EME 1950.0 coordinates by applying the transformation

$$\mathbf{R}_{ed}(t_{ru}) = \mathbf{T}^{\mathbf{d}^{-1}}\mathbf{R}_{ed}^{d}(t_{ru})$$
$$\mathbf{V}_{ed}(t_{ru}) = \mathbf{T}^{\mathbf{d}^{-1}}\mathbf{V}_{ed}^{d}(t_{ru})$$

where the matrix $\mathbf{T^d}$ transforms a vector in EME 1950.0 coordinates to EME-date coordinate and is given on the bottom of page 34 of the Explanatory Supplement to the AENA (1977 edition). Note the time since reference epoch for this matrix is in terms of Julian days and is computed in a similar manner to D above in the computation of T_{gms}. It is assumed to be constant over the entire occultation interval.

Transmit Time Vectors

To determine positions and velocities at transmit time t_{xe}, the time for transmitted photons to travel to the Earth is computed by leaving the Earth's position fixed at t_{re} and iteratively moving the spacecraft along its trajectory to the point where the time for light to travel from that point to the earth is commensurate with the distance between the spacecraft and the earth, *i.e.*, $\mathbf{R}_{as}$ and t_{xe} are allowed to vary in order to satisfy

$$|\mathbf{R}_{as}(t_{xe}) - \mathbf{R}_{ad}(t_{re})| = c(t_{re} - t_{xe})$$

where

$$\mathbf{R}_{as}(t_{xe}) = \mathbf{R}_{os}(t_{xe}) - \mathbf{R}_{oa}(t_{xe})$$
$$\mathbf{R}_{ad}(t_{re}) = \mathbf{R}_{oe}(t_{re}) - \mathbf{R}_{oa}(t_{re}) + \mathbf{R}_{ed}(t_{ra}).$$

The velocity of light is c. The sun is used as a reference since it is stationary in a reference frame moving with the velocity of the center of mass of the solar system. This determination assumes that a photon travels in a straight line during its journey across the solar system. Gravitational bending of light by a planet has been shown (Gresh, 1986) to cause an error in the estimate of positions on the order of a few meters for radio occultations and has been ignored.

Also from the CRS vectors at t_{xe},

$$\mathbf{V}_{as}(t_{xe}) = \mathbf{V}_{os}(t_{xe}) - \mathbf{V}_{oa}(t_{xe})$$

and

$$\mathbf{R}_{ds}(t_{re}, t_{xe}) = \mathbf{R}_{da}(t_{re}) - \mathbf{R}_{as}(t_{xe})$$
$$\mathbf{V}_{ds}(t_{re}, t_{xe}) = \mathbf{V}_{da}(t_{re}) - \mathbf{V}_{as}(t_{xe})$$

Intercept Time Vectors and Radial Location

Given these vectors, it is possible to compute the time δt it takes for a photon leaving the spacecraft to reach the ring plane and its rate of change. A photon in the direct signal

travels along $\mathbf{U}_{sd} = \mathbf{R}_{sd}(t_{xe}, t_{re})/|\mathbf{R}_{sd}(t_{xe}, t_{re})|$ with velocity c. The point of intersection of the ring plane and this ray with respect to the sun is

$$\mathbf{R}_{ap}(t_{ie}) = \mathbf{R}_{as}(t_{xe}) + c\delta t\mathbf{U}_{sd}$$

where $t_{ie} = t_{xe} + \delta t$ and δt is to be determined. Further, assuming the velocity of the planet is constant in its orbit,

$$\begin{aligned}\mathbf{R}_{op}(t_{ie}) &= \mathbf{R}_{ap}(t_{ie}) - \mathbf{R}_{ao}(t_{ie}) \\ &= \mathbf{R}_{as}(t_{xe}) - \mathbf{R}_{ao}(t_{ie}) + c\delta t\mathbf{U}_{sd} \\ &= \mathbf{R}_{as}(t_{xe}) - \mathbf{R}_{ao}(t_{xe}) - \delta t\mathbf{V}_{ao}(t_{xe}) + \delta tc\mathbf{U}_{sd} \\ &= \mathbf{R}_{os}(t_{xe}) + \delta t(\mathbf{V}_{oa}(t_{xe}) + c\mathbf{U}_{sd})\end{aligned}$$

By definition, in the planet-date coordinate system, $\mathrm{R}^o_{z\ op}(t_{ie}) = 0$, which implies

$$\delta t = -\frac{\mathrm{R}^o_{z\ os}(t_{xe})}{\mathrm{V}^o_{z\ oa}(t_{xe}) + c\mathrm{U}^o_{z\ sd}}$$

Having determined δt, $\mathbf{R}_{op}$ is obtained from the above formula. The velocity of the intercept point is

$$\mathbf{V}_{op}(t_{ie}) = \mathbf{V}_{os}(t_{xe}) + \dot{\delta t}(\mathbf{V}_{oa}(t_{xe}) + c\mathbf{U}_{sd}) + c\delta t\dot{\mathbf{U}}_{sd}$$

where

$$\dot{\mathbf{U}}_{sd} = \frac{1}{|\mathbf{R}_{sd}|}(\mathbf{V}_{sd} - \mathbf{U}_{sd}(\mathbf{R}_{sd} \cdot \mathbf{V}_{sd})/|\mathbf{R}_{sd}|)$$

and

$$\dot{\delta t} = -\frac{\mathrm{V}^o_{z\ os}}{\mathrm{V}^o_{z\ oa} + c\mathrm{U}^o_{z\ sd}} + \frac{c\dot{\mathrm{U}}^o_{z\ sd}\mathrm{R}^o_{z\ os}}{(\mathrm{V}^o_{z\ oa} + c\mathrm{U}^o_{z\ sd})^2}$$

The radial location $|\mathbf{R}_{op}|$ can now be directly related to t_{rx} through t_{xe}, t_{re}, δt, and ΔT.

Other Parameters

A number of other important geometric parameters are now easily defined. The sine of the direct ray incidence angle is $\mu_0 = \mathrm{U}^o_{z\ sd}$. The velocity of the intercept point in the radial direction is $\mathbf{U}^o_{op} \cdot \mathbf{V}^o_{op}$. Define $\mathbf{U}^o_{sd\perp}$ as the projection of $\mathbf{U}^o_{sd}$ on the ring plane, renormalized to be a unit vector. Then the angle between this direction and the radial direction is $\phi = \cos^{-1}(\mathbf{U}^o_{op} \cdot \mathbf{U}^o_{sd\perp})$. The magnitude of the mixed vector $\mathbf{R}_{sp}(t_{xe}, t_{ie}) =$

$\mathbf{R}_{op}(t_{ie}) - \mathbf{R}_{os}(t_{xe}) - \delta t \mathbf{V}_{os}(t_{xe})$ gives the distance to the ringplane. The Fresnel scale F is defined in terms of these quantities

$$F = \sqrt{\left(\frac{\lambda|\mathbf{R}_{sp}|}{2}\right)\frac{\cos^2\phi + \mu^2\sin^2\phi}{\mu^2}}$$

where λ is the wavelength of the coherent microwaves.

The matrix $\mathbf{T}_{eo}$ rotates the coordinate system such that the x-axis of the planet-date system is aligned with the direction of ascending node of the ringplane on EME 1950.0. The angles formed by $\mathbf{R}_{op}$ and this direction, the projected Earth direction, and the projected Sun direction are

$$\alpha = \tan^{-1}\frac{\mathrm{R}^o_{y\ op}}{\mathrm{R}^o_{x\ op}}$$

$$\alpha_e = \alpha - \tan^{-1}\frac{\mathrm{R}^o_{y\ oe}}{\mathrm{R}^o_{x\ oe}}$$

$$\alpha_s = \alpha - \tan^{-1}\frac{\mathrm{R}^o_{y\ os}}{\mathrm{R}^o_{x\ os}}$$

respectively. The angles are measured counterclockwise looking down on the ring plane from the direction of the rotational pole.

Acknowledgements

Original formulation of this problem and preliminary solution can be traced to a memo by G.L. Tyler sometime in the 1970s. Software on which this documentation is based was written by H. Zebker and R. Simpson, with later modifications by the author, P. Rosen. The bending of light calculation was performed by D. Gresh. Please direct comments and questions to

Paul A. Rosen
Durand 211
(415) 723 3597

References

Her Majesty's Stationery Office (1977). *Explanatory Supplement to the American Ephemeris and Nautical Almanac*

Gresh, D.L., Personal Communication

Simpson R.A., G.L. Tyler, and J.B. Holberg (1983). Saturn's pole from combined ring occultation data. *Bull. Amer. Astron. Soc.* **14**, 731.

Voyager Navigation Team (1986). Trajectory solution of 2/6/86. Jet Propulsion Laboratory.

INITIAL CRS VECTORS AT SOME TIME INSTANT

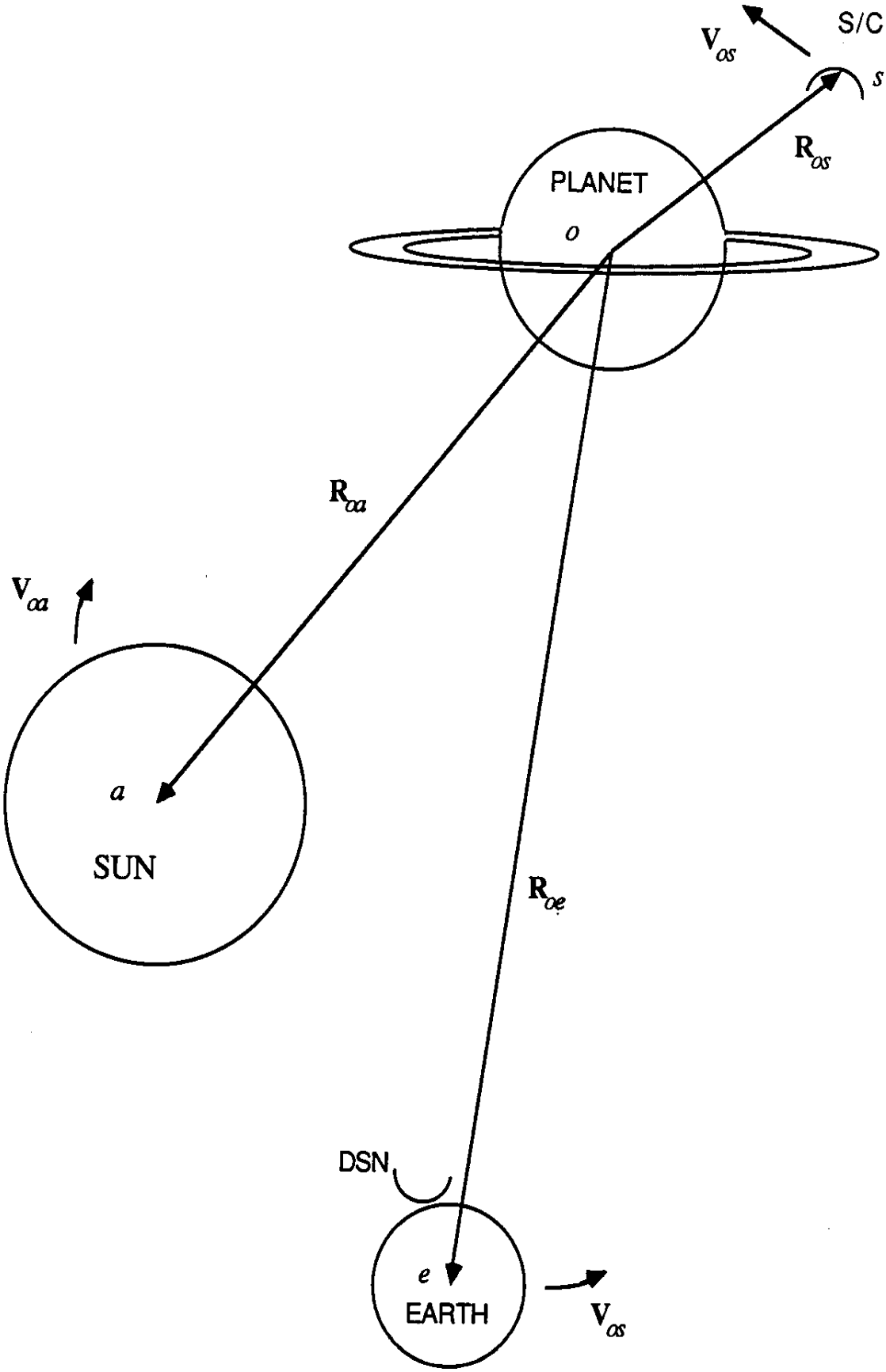

HELIOCENTRIC GEOMETRY AND TIMES FOR RADIAL LOCATION DETERMINATION

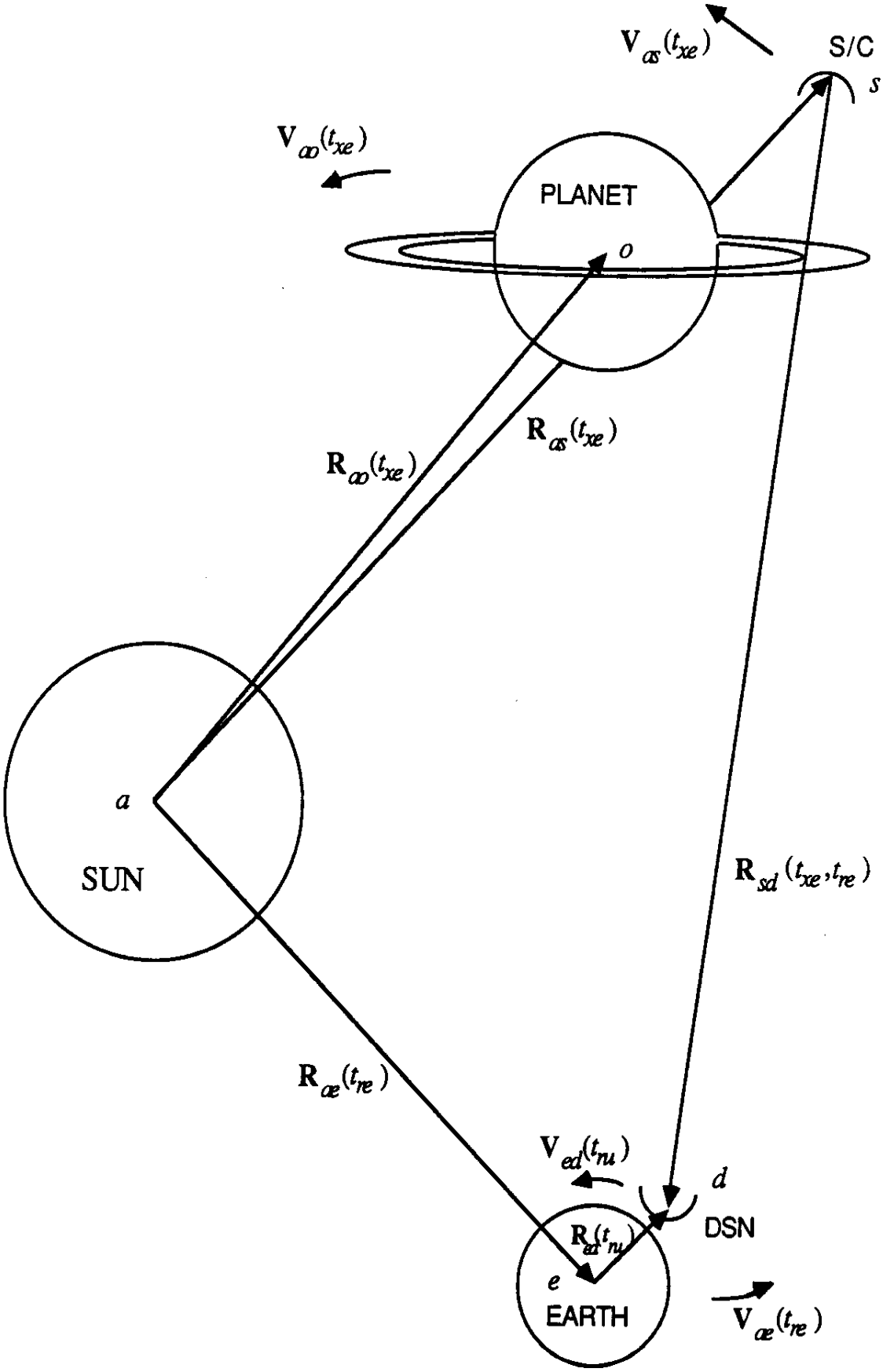

MOTIONS OF BODIES DURING LIGHT TRAVEL TIME

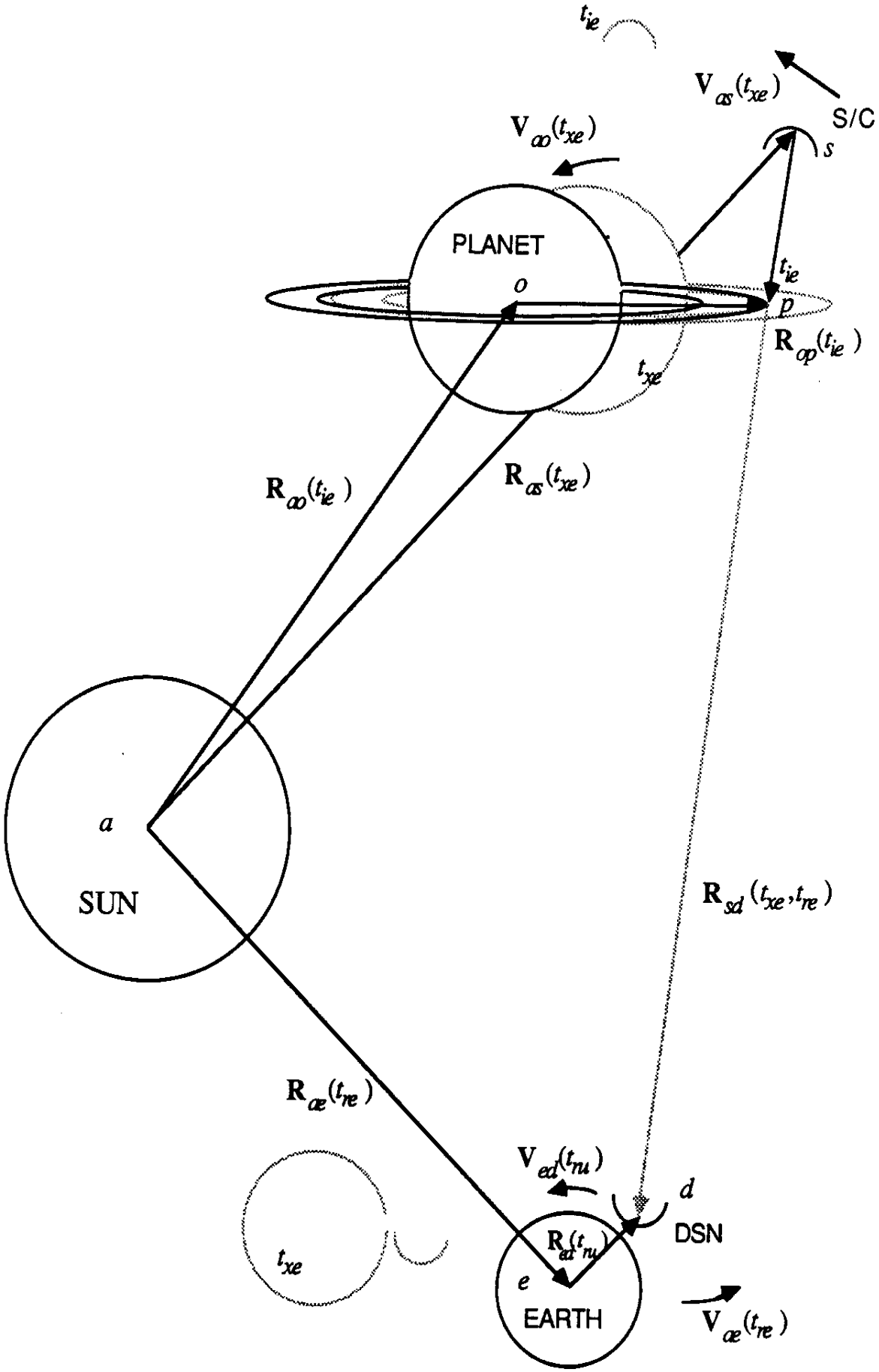

```
$ASS IN HT1
$EXE TPDUMP BS

                                DUMP OF TAPE VOY3

INPUT TAPE  VOY3     ON  HT1
DATA INPUT    FS NF 2 SR 2 1 1

          FILE   INPUT      DATA RECORDS      MAX.          READ ERROR SUMMARY          INPUT RETRIES
                 RECS.        INPUT           SIZE      PERM  ZERO B   SHORT  UNDEF.  #RECS.  TOTAL#
                   1            5              8912        0      0        0      0       0       0
                                1989  05
FILE      2  RECORD      1  LENGTH 25  8192BYTES
(    0)  000007C5  00000008  00000019  4E433036  33342020  20202020  20202020  00000023  53202020  52202020
(   40)  4888E184  FA000000  41505052  4550464E  442E5052  20202020  41505052  45502031  2E31312C  20372F38
(   80)  000007C5  0000000B  00000001  00000014  0000000B  00000006  3F14F8B5  88E368F1  44BC7209  AAA3AD1D
(  120)  44BF51EC  D4AA10E4  3E14F8B5  88E368F1  3F100020  00E6712D  44295487  FFFFFFFF  4435C987  FFFFF66F
(  160)  00000008  000000DB  00000800  00000020  41727261  7920506C  75732042  4C4F4343  20492F4F  20766572
(  200)  73696F6F  206F6620  56325546  4E442C20  6F757470  75742069  73206669  78656420  706F696E  7420636F
(  240)  6D756C65  78202020  20202020  20202020  80000004  70066C00  000005CD  00000001  7006738A  F00F8F93
(  280)  700FBA12  00000000  7007F9A0  003D0000  00000003  70067472  00000017  7006735C  00020000  70067338
(  320)  E00CE6E8  00417358  E00FF484  7007F9D4  00000800  00000001  E00CE5F4  00000044  80000000  700673F0
(  360)  700F5F2A  7006732E  00000001  700FBA12  FFFF8000  70066C00  80000000  700F5F2A  700F5F2A  7007F9A0
(  400)  7006732E  F00F5F0F  70066C0A  7006732E  F00F5F0B  80000000  700F3FCC  7007F2D8  7007F2D8  7006732A
(  440)  700F4650  700674A2  7007F2D8  7007F2A4  E00FE68D  80000002  000005C7  00000001  7006732E  7006741C
(  480)  7007F2A4  70067400  F00FC550  7007F2D8  700641AE  0089740C  F00FC530  700FC5BF  00000006  7006741E
(  520)  7006741C  80000002  00000002  00000002  0000003B  7007F2A4  70067418  F00F521B  00000000  00000000
(  560)  00000000  00000000  00000000  00000000  00000000  00000800  0040FFFF  0001FFFF  00030000  FFFF0003
(  600)  00010001  FFFF0000  0000FFFF  0000FFFF  00006C0A  00000003  700673AA  00000000  00000000  00C3C7C9
(  640)  8789A739  0004B409  700FE99B  7006747C  00000000  00000000  00000000  00000000  80000000  80004000
(  680)  3A444953  4B323A44  32343A5F  56324E3A  4E433036  33342E34  33535200  00007418  00000000  00000001
(  720)  80000000  00000001  700FBA16  70064138  70067418  700FBA16  70066C0A  700641B8  70067418  700FBA12
(  760)  00000000  00000000  00000000  00000000  00000000  00000000  00000000  00000000  7006744C  00000000
(  800)  700674C6  700674CA  700674A2  700644C2  80000004  00000000  700FBA16  7006744C  700674B6  F00FC593
(  840)  700FC5BF  80000000  70066C10  FFFF8000  70066C00  70067482  F00FC48E  70066C0A  700641B8  70067482
(  880)  F00FC481  700FC5BF  00000000  00000000  00000000  00000000  00000000  00000000  00000000  00000000
(  920)  00000000  00000000  00000000  00000000  00000001  00000000  700F3182  700673B6  00000000  700F3182
(  960)  700673B6  0000003C  7007FE46  7007F9A0  80000001  00006002  00000001  7007F9A0  700673B6  F00F3182
( 1000)  700673B6  F00F3168  F00F315B  0000000C  7007FE46  7006752C  00000000  00000000  00000000  00000000
( 1040)  00000000  00000000  00000000  00000000  00000000  00000000  00000000  00000000  00000000  00000000
( 1080)  00000000  00000000  00000000  00000000  00000000  00000000  00000000  00000000  00000000  00000000
( 1120)  00000000  00000000  00000000  00000000  00000000  00000000  00000000  00000000  00000000  00000000
( 1160)  00000000  00000000  00000000  00000000  00000000  00000000  00000000  00000000  00000000  00000000
( 1200)  00000000  00000000  00000000  00000000  00000000  00000000  00000000  00000000  00000000  00000000
( 1240)  00000000  00000000  00000000  00000000  00000000  00000000  00000000  00000000  00000000  00000000
( 1280)  00000000  00000000  00000000  00000000  00000000  00000000  00000000  00000000  00000000  00000000
( 1320)  00000000  00000000  00000000  00000000  00000000  00000000  00000000  00000000  00000000  00000000
( 1360)  00000000  00000000  00000000  00000000  00000000  00000000  00000000  00000000  00000000  00000000
( 1400)  00000000  00000000  00000000  00000000  00000000  00000000  00000000  00000000  00000000  00000000
( 1440)  00000000  00000000  00000000  00000000  00000000  00000000  00000000  00000000  00000000  00000000
( 1480)  00000000  00000000  00000000  00000000  00000000  00000000  00000000  00000000  00000000  00000000
( 1520)  00000000  00000000  00000000  00000000  00000000  00000000  00000000  00000000  00000000  00000000
( 1560)  00000000  00000000  00000000  00000000  00000000  00000000  00000000  00000000  00000000  00000000
( 1600)  00000000  00000000  00000000  00000000  00000000  00000000  00000000  00000000  00000000  00000000
( 1640)  00000000  00000000  00000000  00000000  00000000  00000000  00000000  00000000  00000000  00000000
( 1680)  00000000  00000000  00000000  00000000  00000000  00000000  00000000  00000000  00000000  00000000
( 1720)  00000000  00000000  00000000  00000000  00000000  00000000  00000000  00000000  00000000  00000000
( 1760)  00000000  00000000  00000000  00000000  00000000  00000000  00000000  00000000  00000000  00000000
( 1800)  00000000  00000000  00000000  00000000  00000000  00000000  00000000  00000000  00000000  00000000
( 1840)  00000000  00000000  00000000  00000000  00000000  00000000  00000000  00000000  00000000  00000000
( 1880)  00000000  00000000  00000000  00000000  00000000  00000000  00000000  00000000  00000000  00000000
( 1920)  00000000  00000000  00000000  00000000  00000000  00000000  00000000  00000000  00000000  00000000
( 1960)  00000000  00000000  00000000  00000000  00000000  00000000  00000000  00000000  00000000  00000000
( 2000)  00000000  00000000  00000000  00000000  00000000  00000000  00000000  00000000  00000000  00000000
( 2040)  00000000  00000000  FDBD0C3B  043CF267  FEA6F0E7  040806D5  FE0FF974  FBBCFFC0  00C904C1  FD780BCC
( 2081)  04E5F8F4  0831EDAE  FEEDFD65  F8DBF7A8  F2610FE7  003E0B4E  076802BD  FDFBFCD7  09D804FA  09FBF8F8
( 2121)  FB2D0185  F93B0995  0F980484  F64CF856  040DFC9C  F5C7096B  F5A5EC9C  017C043A  FB00F88D  FBF902DC
```

```
(  744 )  FE2AF4?C  JSR...  ...  ...  ...  ...  ...  ...  ...  ...  ...
(  748 )  FB25?6D1  FC2DFDC1  FD8E?767  ?E3605CF  06BAF833  F4CFFC78  FD8?0219  FC6F0326  02A107CB  F70008F4
(  752 )  015AFBA5  FBAAEAAD  1011FF36  F6ABF790  00F1F833  01581015  FE3DED02  F4570D2C  092EFD78  070905FD
(  756 )  FC10F868  0D14009E  FC80FAF0  F9FB01A8  0A57F6B6  0C2C0292  F43C0850  F8FD03CA  F9300C96  054502BB
(  760 )  F9E9FA96  04D6F540  FEF2FED2  01D1FC6C  0A9301C7  EFA1F887  F5D60AD8  FA9100A7  07860420  05FAFE07
(  764 )  0E07F867  F5C5F822  FA720461  FDCD0790  06DFF15F  FA360C07  0BF9FF9B  FCF00083  00CE00B8  03F90237
(  768 )  0334F313  F12A0F3A  0000FF86  FF060326  0170FD0C  0C3A081B  F3DBF538  FE34F7A5  0945035E  F6500454
(  772 )  FA130265  083AF730  FD95FCC3  01A6062A  0DA804F1  FFDDFCEF  FA7C0E40  F581F589  F950FE9B  FF60002F
(  776 )  05B60381  0745F8BF  0270FF12  F33C08EF  00CBFDB7  F93CEFA6  0BFB080F  03F5040A  02A2F7D6  FB6EFB8E
(  780 )  007307CB  0019FE5C  F4C1FD69  CAA6F392  FA3B077B  040E01FC  FBF6FC77  032EF4D1  FC620DC0  0B23FD90
(  784 )  F862FDA9  F5C1151D  F6430306  072DEE6F  0989F6CA  FEF6F054  F36E0C90  F05A0B88  04E7F49C  05A8F6D0
(  788 )  FA790577  090FF4D3  0C300A14  FE6E06B4  0C24F440  FEC60F5A  EE6801CC  FFD4FDAD  0318F9F3  F718F78D
(  792 )  04B9F925  FEDAFB51  0645C9A7  05EC0897  F345012C  07E3FD78  F7340625  0274F419  FA9502DA  092C01FC
(  796 )  F802FB08  F2C408D8  07430BBD  02F500DC  0045F729  05E2F6E0  0AACFEC2  F5AF0509  F8BA0020  F954F7E1
(  800 )  04CF05A0  0080FE9E  0FF70406  02F5FA54  FDE5FB11  F9B2FC81  0254FDD4  03F50C50  01510248  029EFFB4
(  804 )  02D5FAC3  F0F507C5  F6A5FADB  FF000006  FD97FC1E  157202F1  F4F0FBEB  05CFFE1D  F4630408  0909F795
(  808 )  04A80589  FFD8FD6E  EC191334  00C5F586  009C0C4D  F4F2056B  982901FD  12A1F5E1  0A450200  F816FA8E
(  812 )  050CFD93  F74A010F  FFBA01DA  04C3F3E7  07EDEBC5  FA150176  0181FA22  FA6E1793  F80BEDB3  FD580541
(  816 )  FADD05C3  FC151073  03F1F8CB  0EACFBFD  FAEAFD0C  088B0D5D  F1B00115  028FFF01  FEE80440  0B48FFB3
(  820 )  F55CFC9A  105AF28C  EDACFCD1  0FA4FA77  F7600474  0387F585  FCE10A2C  FB9A020B
```

FILE	INPUT RECS.	DATA RECORDS INPUT	MAX. SIZE	READ ERROR SUMMARY PERM	ZERO B	SHORT	UNDEF.	INPUT RETRIES #RECS.	TOTAL#
2	733	733	8192	0	0	0	0	0	0

```
EOJ         DUMP STOPPED AFTER FILE   2          # OF PERMANENT READ ERRORS  0

START TIME 11/14/90  11:13:44        STOP TIME 11/14/90  11:14:16

$$
$ASS IN HT1
$EXE TPDUMP BS
```