#311

IMP-D

82 SEC. AVGD. VECTORS

5.12 SEC. MAG. VECTORS

82 SEC. AVGD. VECTORS, (REBLOCKED)

66-058A-03C

66-058A-03D
66-058A-03F

IMP-D

82 SEC. AVERAGED VECTORS, DSC TAPES

66-058A-03C

This data set has been restored. There were originally 20 Binary 7-Track, 556 BPI tapes. The orignial tapes were padded. There are two restored tapes. The DR tapes are 3480 cartridges and the DS tapes are 9-track, 6250 BPI. The original tapes were created on an IBM 7094 computer, and restored on the MODCOMP computer. The DR and DS numbers along with the corresponding D numbers and the time spans are as follows:

DR#	DS#	D#	FILES	TIME SPAN
DR03109	DS03109	D18961	1-10	07/01/66 - 09/09/66
		D19862	11-20	09/10/66 - 11/19/66
		D19863	21-32	11/19/66 - 01/28/67
		D18964	33-42	01/28/67 - 04/08/67
		D18965	43-52	04/08/67 - 06/17/67
		D18966	53-65	06/17/67 - 08/26/67
		D18968	66-76	11/04/67 - 01/13/68
		D18967	77-86	08/26/67 - 11/04/67
		D18969	87-96	01/13/68 - 03/23/68
		D18970	97-106	03/24/68 - 06/01/68
DR03110	DS03110	D18971	1-10	06/02/68 - 08/10/68
		D18972	11-20	08/11/68 - 10/19/68
		D18973	21-31	10/20/68 - 12/28/68
		D18974	32-41	12/29/68 - 03/08/69
		D18975	42-51	03/08/69 - 05/17/69
		D18976	52-61	05/17/69 - 10/04/69
		D18977	62-71	07/26/69 - 10/04/69
		D18978	72-81	10/04/69 - 12/13/69
		D18979	82-87	12/13/69 - 01/13/70
		D18980	88-96	02/23/70 - 09/14/70

REQ. AGENT	RAND NO.	ACQ. AGENT
VJP	RC3750	JHK

IMP-D

82 SEC. AVGD. VECTORS

5.12 SEC. MAG. VECTORS

66-058A-03C

66-058A-03D

This data set catalog contains 20 82 Second Averaged Vectors and 195 5.12 Second Magnetic Field Vectors data tapes. The tapes are 556 BPI, Binary, 7-track. The 82 Sec. data are multi-filed and the 5.12 Sec. data are 1 file each. These tapes were written on an IBM 7094 computer. In determining the start and stop times consider Jan. 1 = day 0.

Time spans are as follows:

82 Second Averaged Vectors

D#	C#	FILES	TIME SPAN
D-18961	C-15261	10	07/01/66 - 09/09/66
D-18962	C-15262	10	09/10/66 - 11/19/66
D-18963	C-15263	12	11/19/66 - 01/28/67
D-18964	C-15264	11	01/28/67 - 04/08/67
D-18965	C-15265	10	04/08/67 - 06/17/67
D-18966	C-15266	13	06/17/67 - 08/26/67
D-18968	C-15268	11	08/26/67 - 11/04/67
D-18967	C-15267	11	11/04/67 - 01/13/67
D-18969	C-15269	10	01/13/68 - 03/23/68
D-18970	C-15270	10	03/23/68 - 06/01/68
D-18971	C-15271	10	06/01/68 - 08/10/68
D-18927	C-15272	10	08/10/68 - 10/19/68
D-18928	C-15273	11	10/19/68 - 12/28/68

D#	C#	FILES	TIME SPAN
D-18929	C-15274	11	12/28/68 - 3/08/69
D-18930	C-15275	10	3/08/69 - 5/17/69
D-18931	C-15276	11	5/17/69 - 7/26/69
D-18932	C-15277	10	7/26/69 - 10/04/69
D-18933	C-15278	10	10/04/69 - 12/13/69
D-18934	C-15279	6	12/13/69 - 1/13/69
D-18935	C-15280	9	2/23/70 - 9/14/70

5.12 Second Magnetic Field Vectors

D#	C#	WEEK	TIME SPAN
D-19171	C-15589	01	7/01/66 - 7/09/66
D-19172	C-15590	02	7/09/66 - 7/16/66
D-19173	C-15591	03	7/16/66 - 7/23/66
D-20485	C-16393	04	7/23/66 - 7/30/66
D-20487	C-16395	05	7/30/66 - 8/07/66
D-19608	C-16005	06	8/06/66 - 8/13/66
D-19607	C-16004	07	8/13/66 - 8/20/66
D-19606	C-16003	09	8/27/66 - 9/03/66
D-19605	C-16002	10	9/03/66 - 9/09/66
D-19604	C 16001	11	9/10/66 - 9/17/66
D-19603	C-15947	12	9/17/66 - 9/23/66
D-19602	C-15946	13	9/24/66 - 10/01/66
D-19610	C-16007	14	10/01/66 - 10/08/66
D-19174	C-15592	15	10/08/66 - 10/15/66
D-19175	C-15593	16	10/15/66 - 10/22/66
D-19176	C-15594	17	10/22/66 - 10/29/66
D-19177	C-15595	18	10/29/66 - 11/05/66

D#	C#	WEEK	TIME SPAN
D-19178	C-15596	19	11/05/66 - 11/12/66
D-19179	C-15597	20	11/12/66 - 11/19/66
D-19609	C-16006	21	11/19/66 - 11/26/69
D-19180	C-15598	23	12/03/66 - 12/10/66
D-19550	C-15872	24	12/10/66 - 12/17/66
D-19181	C-15599	25M	12/21/66 - 12/22/66
D-19182	C-15600	26	12/24/66 - 12/31/66
D-19184	C-15602	27	12/31/66 - 1/06/67
D-19187	C-15605	28	1/07/67 - 1/14/67
D-19185	C-15603	29A	1/14/67 - 1/21/67
D-19186	C-15604	29B	1/18/67 - 1/21/67
D-19188	C-15606	30	1/21/67 - 1/28/67
D-19189	C-15607	31A	1/28/67 - 2/02/67
D-19183	C-15601	31B	2/02/67 - 2/04/67
D-19190	C-15608	32	2/04/67 - 2/11/67
D-19191	C-15609	33	2/11/67 - 2/18/67
D-19192	C-15610	34	2/18/67 - 2/25/67
D-19193	C-15611	35	2/25/67 - 3/01/67
D-19194	C-15612	36	3/04/67 - 3/11/67
D-19195	C-15613	37	3/11/67 - 3/18/67
D-19196	C-15614	38	3/18/67 - 3/25/67
D-19197	C-15615	39	3/25/67 - 4/01/67
D-19198	C-15616	44	4/29/67 - 5/06/67
D-19199	C-15617	45	5/06/67 - 5/13/67
D-19200	C-15618	46	5/13/67 - 5/20/67
D-19201	C-15730	47	5/20/67 - 5/27/67
D-19202	C-15731	48	5/27/67 - 6/03/67
D-19203	C-15732	49	6/03/67 - 6/10/67
D-19204	C-15733	50	6/10/67 - 6/17/67

D#	C#	WEEK	TIME SPAN
D-19205	C-15734	51	6/17/67 - 6/24/67
D-19206	C-15735	52A	6/24/67 - 6/29/67
D-20492	C-16400	52B	6/30/67 - 6/30/67
D-19207	C-15736	53A	7/01/67 - 7/06/67
D-19208	C-15737	53B	7/06/67 - 7/08/67
D-19209	C-15738	54	7/08/67 - 7/15/67
D-19210	C-15739	55	7/15/67 - 7/22/67
D-19211	C-15240	56A	7/22/67 - 7/26/67
D-19212	C-15741	57	7/29/67 - 8/05/67
D-19213	C-15742	58	8/05/67 - 8/12/67
D-19214	C-15743	59	8/12/67 - 8/19/67
D-19215	C-15744	60	8/19/67 - 8/26/67
D-19216	C-15745	61	8/26/67 - 9/02/67
D-19217	C-15746	62	9/02/67 - 9/09/67
D-19560	C-15882	63A	9/09/67 - 9/11/67
D-19559	C-15881	63B	9/11/67 - 9/16/67
D-19558	C-15880	64	9/16/67 - 9/23/67
D-19557	C-15879	65	9/23/67 - 9/30/67
D-19556	C-15878	66	9/30/67 - 10/07/67
D-19555	C-15877	67	10/07/67 - 10/14/67
D-19554	C-15876	68	10/14/67 - 10/21/67
D-19553	C-15875	69	10/21/67 - 10/28/67
D-19552	C-15874	70	10/28/67 - 11/04/67
D-19551	C-15873	71	11/04/67 - 11/11/67
D-19600	C-15944	72	11/11/67 - 11/18/67
D-19549	C-15871	73	11/18/67 - 11/25/67
D-19548	C-15870	74	11/25/67 - 12/02/67
D-120484	C-16391	75	12/02/67 - 12/09/67
D-19547	C-15869	76A	12/09/67 - 12/10/67

D#	C#	WEEK	TIME SPAN
D-19546	C-15868	76B	12/10/67 - 12/16/67
D-19545	C-15867	77	12/16/67 - 12/23/67
D-19544	C-15866	78	12/23/67 - 12/30/67
D-19570	C-15892	79	12/30/67 - 1/06/68
D-19569	C-15891	80	1/06/68 - 1/13/68
D-19568	C-15890	81	1/13/68 - 1/20/68
D-19567	C-15889	82	1/20/68 - 1/27/68
D-19566	C-15888	83	1/27/68 - 2/03/68
D-19565	C-15887	84	2/03/68 - 2/10/68
D-19564	C-15886	85	2/10/68 - 2/17/68
D-19563	C-15885	86	2/17/68 - 2/23/68
D-19562	C-15884	87	2/24/68 - 3/02/68
D-19561	C-15883	88	3/02/68 - 3/09/68
D-19571	C-15893	89	3/09/68 - 3/16/68
D-19572	C-15894	90	3/16/68 - 3/23/68
D-19672	C-16088	91	3/23/68 - 3/29/68
D-19573	C-15895	92	3/30/68 - 4/06/68
D-19574	C-15918	93	4/06/68 - 4/13/68
D-19575	C-15919	94	4/13/68 - 4/20/68
D-19576	C-15920	95	4/20/68 - 4/27/68
D-19577	C-15921	96	4/27/68 - 5/04/68
D-19578	C-15922	97	5/04/68 - 5/11/68
D-19579	C-15923	98	5/11/68 - 5/18/68
D-19580	C-15924	99	5/18/68 - 5/25/68
D-19590	C-15934	100	5/25/68 - 6/01/68
D-19589	C-15933	101	6/01/68 - 6/08/68
D-20486	C-16394	102	6/08/68 - 6/15/68
D-19588	C-15932	103	6/15/68 - 6/22/68
D-19587	C-15931	104	6/22/68 - 6/29/68

D#	C#	WEEK	TIME SPAN
D-19586	C-15930	105	6/29/68 - 7/06/68
D-19585	C-15929	106	7/06/68 - 7/13/68
D-19584	C-15928	107	7/13/68 - 7/20/68
D-19583	C-15927	108	7/20/68 - 7/27/68
D-19582	C-15926	109	7/27/68 - 8/03/68
D-19581	C-15925	110	8/03/68 - 8/10/68
D-20488	C-16396	111	8/10/68 - 8/17/68
D-19601	C-15945	112	8/17/68 - 8/24/68
D-19673	C-16089	113	8/24/68 - 8/31/68
D-20489	C-16398	114	8/31/68 - 9/07/68
D-19674	C-16090	115	9/07/68 - 9/14/68
D-19675	C-16091	116	9/14/68 - 9/21/68
D-19676	C-16092	117	9/21/68 - 9/28/68
D-19677	C-16093	118	9/28/68 - 10/05/68
D-19678	C-16094	119	10/05/68 - 10/12/68
D-19679	C-16095	120	10/12/68 - 10/19/68
D-19599	C-15943	121	10/19/68 - 10/26/68
D-19651	C-16048	122	10/26/68 - 11/02/68
D-19652	C-16049	123	11/02/68 - 11/09/68
D-19653	C-16050	124	11/09/68 - 11/16/68
D-19654	C-16051	125	11/16/68 - 11/23/68
D-19655	C-16052	126	11/23/68 - 11/30/68
D-19656	C-16053	127	11/30/67 - 12/07/68
D-19657	C-16057	128	12/07/68 - 12/14/68
D-19658	C-16055	129	12/14/68 - 12/21/68
D-19659	C-16056	130	12/21/68 - 12/23/68
D-19660	C-16061	131A	12/23/68 - 12/28/68
D-19640	C-16037	132	1/04/69 - 1/11/69
D-19639	C-16036	133	1/11/69 - 1/18/69

D#	C#	WEEK	TIME SPAN
D-19638	C-16035	134	1/18/69 - 1/25/69
D-19637	C-16034	135	1/25/69 - 2/01/69
D-19636	C-16033	136	2/01/69 - 2/07/69
D-19671	C-16087	137	2/08/69 - 2/15/69
D-19635	C-16032	138	2/15/69 - 2/22/69
D-19634	C-16031	139	2/22/69 - 3/01/69
D-19633	C-16030	140A	3/01/69 - 3/03/69
D-19632	C-16029	140B	3/03/69 - 3/08/69
D-20483	C-16391	142	3/15/69 - 3/22/69
D-19631	C-16028	143	3/22/69 - 3/29/69
D-19644	C-16041	144	3/29/69 - 4/05/69
D-19645	C-16042	145	4/05/69 - 4/12/69
D-19646	C-16043	146	4/12/69 - 4/19/69
D-19647	C-16044	147	4/19/69 - 4/26/69
D-19648	C-16045	148	4/26/69 - 5/03/69
D-19649	C-16046	149	5/03/69 - 5/10/69
D-19650	C-16047	150	5/10/69 - 5/17/69
D-19630	C-16027	151	5/17/69 - 5/24/69
D-19629	C-16026	152	5/24/69 - 5/31/69
D-19598	C-15942	153	5/31/69 - 6/07/69
D-19596	C-15940	154B	6/07/69 - 6/14/69
D-19597	C-15941	154A	6/13/69 - 6/14/69
D-19595	C-15939	155	6/14/69 - 6/21/69
D-19594	C-15938	156	6/21/69 - 6/28/69
D-19593	C-15937	157	6/28/69 - 7/05/69
D-19592	C-15936	158	7/05/69 - 7/12/69
D-19591	C-15935	159	7/12/69 - 7/19/69
D-19670	C-16086	160	7/19/69 - 7/26/69

D#	C#	WEEK	TIME SPAN
D-19669	C-16085	161	7/26/69 - 8/02/69
D-19667	C-16083	163	8/09/69 - 8/16/69
D-19666	C-16082	164	8/16/69 - 8/23/69
D-19665	C-16081	165	8/23/69 - 8/30/69
D-19664	C-16080	166	8/30/69 - 9/06/69
D-19663	C-16060	167	9/06/69 - 9/12/69
D-19662	C-16059	168	9/13/69 - 9/19/69
D-19661	C-16058	169	9/20/69 - 9/26/69
D-19619	C-16016	170	9/27/69 - 10/04/69
D-19618	C-16015	171	10/04/69 - 10/11/69
D-19617	C-16014	172	10/11/69 - 10/17/69
D-19616	C-16013	173	10/18/69 - 10/25/69
D-19615	C-16012	174	10/25/69 - 11/01/69
D-19620	C-16017	175	11/01/69 - 11/08/69
D-19614	C-16011	176	11/08/69 - 11/15/69
D-19613	C-16010	177	11/15/69 - 11/22/69
D-20493	C-16401	178	11/22/69 - 11/28/69
D-19612	C-16009	179	11/29/69 - 12/06/69
D-19611	C-16008	180	12/06/69 - 12/13/69
D-20491	C-16399	181	12/13/69 - 12/20/69
D-19641	C-16035	182	12/20/69 - 12/27/69
D-19642	C-16039	183A	12/27/69 - 12/31/69
D-19643	C-16040	183B	1/01/70 - 1/03/70
D-19680	C-16096	184	1/03/70 - 1/10/70
D-19624	C-16021	185	1/10/70 - 1/13/70
D-19623	C-16020	200	2/23/70 - 2/28/70
D-19622	C-16019	201	2/28/70 - 3/03/70

D#	C#	WEEK	TIME SPAN
D-20489	C-16397	223	8/01/70 - 8/08/70
D-19621	C-16018	225	8/15/70 - 8/22/70
D-19628	C-16025	226	8/22/70 - 8/27/70
D-19627	C-16024	227	8/29/70 - 9/05/70
D-19626	C-16023	228	9/05/70 - 9/12/70
D-19625	C-16022	229	9/12/70 - 9/14/70

Project 1064-3 - Technical Note 122

Originator: Sharone Lathrop Date: March 8, 1972

Subject: Documentation of a FORTRAN Package to Read DCS Blocked Explorer Individual Vector Tapes

TABLE OF CONTENTS

			Page
Section	1	PROGRAM DESCRIPTION	1-1
	1.1	Purpose	1-1
	1.2	Input/Output	1-1
	1.3	Method	
Section	2	SUBROUTINE DESCRIPTION	2-1
	2.1	Subroutine IVREAD	2-1
	2.1.1	Purpose	2-1
	2.1.2	Calling Sequence	2-1
	2.1.3	Key Variables	2-2
	2.1.4	Method	2-3
	2.1.5	Comments	2-3
	2.2	Subroutine CNVTCP	2-8
	2.2.1	Purpose	2-8
	2.2.2	Calling Sequence	
	2.2.3	Key Variables	2-8
	2.2.4	Method	2-10
	2.2.5	Comments	2-10
	2.3	Function ALPHA	2-12
	2.3.1	Purpose	2-12
	2.3.2	Calling Sequence	2-12
	2.3.3	Key Variables	2-12
	2.3.4	Method	2-12
	2.3.5	Comments	2-12
Section	3	USAGE INSTRUCTIONS	3-1
	3.1	Description	3-1

3.2	System and Equipment	3-1
3.3	Control C	3-1
3.4	Calling the Routine	3-1
3.5	Restrictions	3-3
Appendix A	DESCRIPTION OF THE EXPLORER INDIVIDUAL VECTOR TAPE	A-1
Appendix B	AMES, IBM/360 RE-READ CAPABILITY	B-1
Appendix C	PROGRAM LISTING	C-1

Section 1

PROGRAM DESCRIPTION

1.1 PURPOSE

This set of three FORTRAN subprograms is used to read the Explorer 33 and Explorer 35 Magnetometer Individual Vector tapes on the IBM/360. The tapes are blocked for the IBM 7040/7094 DCS which makes them directly unreadable by other systems.

1.2 INPUT/OUTPUT

Input is an Explorer Magnetometer Individual Vector tape. A complete tape description is included as Appendix A. Output is one logical record, that is one individual vector for each call to the subroutine IVREAD. The exact amount of data returned depends on whether the vector is the first in a sequence as described under method.

1.3 METHOD

The program is written in FORTRAN IV for use on the IBM 360/67. The program makes use of a re-read capability which may not be available on other machines. The Ames write-up for this feature is included as Appendix B. Essentially, an array is defined to be also a buffer area. Each time a physical record is read it is placed in this array, starting at any desired place in the array. The array is then treated as an external device which may be read many times. The procedure is to read one physical record into the array in A format, then locate and read successive logical records in the appropriate integer and floating point formats.

The re-read approach is used because there are two vector formats. The first vector of each sequence contains time information, data and a count of the number of vectors in the sequence. The rest of the vectors in a sequence have blanks instead of time information and are six characters shorter because they do not have the vector count. The number of vectors in a sequence ranges from eight to fourteen. Each physical record contains a fixed number of characters, 2760, including control words. There are about twenty-one vectors then in a physical record.

Section 2

SUBROUTINE DESCRIPTION

2.1 SUBROUTINE IVREAD

2.1.1 Purpose

This subroutine reads standard Explorer Individual Vector tapes and returns one vector for each subroutine call.

2.1.2 Calling Sequence

CALL IVREAD (ITIME, L, VECTOR, NVEC)

All four quantities are output; NVEC is also input and should not be changed by the calling program.
ITIME is an integer array of dimension five containing sequence number, day, hour, minute, second.
L is vector position.
VECTOR is a real array containing the magnitude, angles and vector components in three coordinate systems. The dimension is sixteen.
The dimension is sixteen.
NVEC is the number of vectors in the sequence.
L and VECTOR are set on every call, but ITIME and NVEC are changed only when the first vector of a sequence is read.

2.1.3 Key Variables

Variable	Description
A	The array into which the data is read, and which serves as a buffer to be re-read, 721 words
BLANK	An integer containing four blank characters for resetting formats.
FIRST	A logical flag set to true before the first entry to IVREAD and false after
FMT	The format for reading all vectors except the first in a sequence (integer).
FMT1	The format for reading the first vector in a sequence (integer)
FMT3, FMT4	The integer words for initializing the third and fourth words of FMT and FMT1.
INDEX	The character position inside the word array A where the previous vector ended. The position of the last character of the six character control word
IREAD	A logical word set to true if a physical record will be read on the next subroutine call, i.e. if there is less than a complete vector left in the buffer
IVEC	A counter of the number of vectors read in this sequence
J	A counter of the number of words moved from the end to the start of the buffer
N1	The number of multiples of 255 characters to be skipped with format FMT or FMT1
N2	The number of remaining characters to skip, $0 < N2 \leq 255$.

2.1.4 Method

We start by declaring that A is a buffer area of 2884 characters. This size is one physical record, 2748 characters, (the twelve character control word is skipped) plus the longest vector, 132 characters, plus four characters.

Next, one physical record is read in A format skipping the twelve character control word. On the first read the data is placed at the beginning of the buffer. Before subsequent reads any partial vector at the end of the buffer is moved to the beginning of the buffer. This transfer is on a word basis. To avoid trying to move zero words an extra four characters (one word) are moved.

A vector is re-read from the buffer area using an execution time format. The format is referenced to the beginning of the buffer area, so a variable number of characters must be skipped. On the very first read the control word of six characters must be skipped. The second read skips 138 characters, the first vector and another control word. Soon more than 255 characters must be skipped. However Fortran limits you to 255X. Thus we code 2558x as 10(255X), 8X. The ten and eight are N1 and N2 listed under Key Variables. Likewise, 2550x would be coded 9(255x), 255x to avoid the error of reading 0x. The execution time formats are setup by determining N1 and N2 then using function ALPHA to obtain their character representation in the appropriate place in the format.

2.1.5 Comments

There is extensive use of the number four in this routine. There are four characters per word on the IBM/360. A machine such as a CDC 6600 which has ten characters per word would need to change these

fours to tens. Also, a CDC 6600 would probably not have the Read (99) feature, but the CDC DECODE routine is similar.

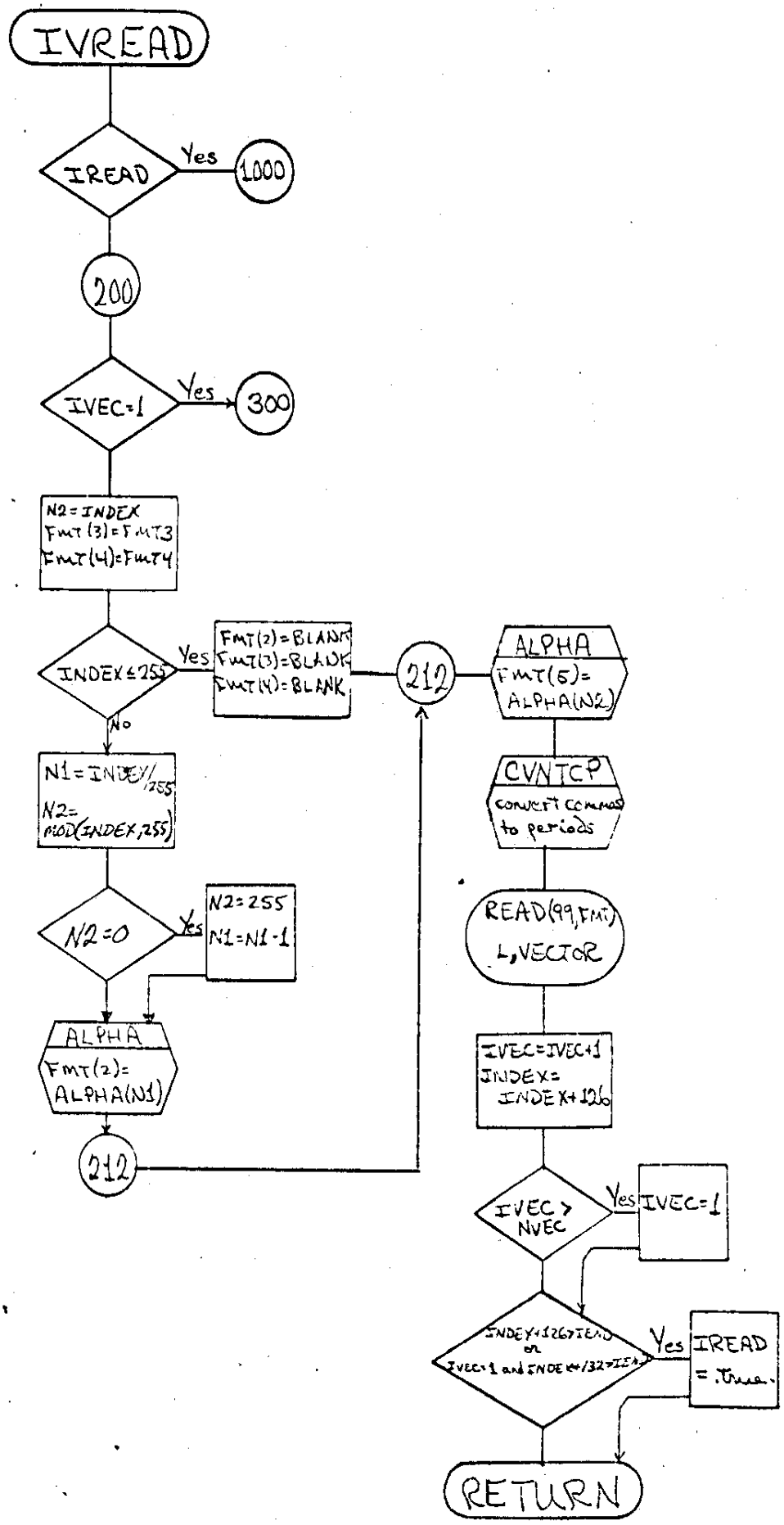
IVREAD
IREAD
Yes
1000
200
IVEC=1
Yes
300
N2=INDEX
FMT(3)=FMT3
FMT(4)=FMT4
INDEX≤255
Yes
FMT(2)=BLANK
FMT(3)=BLANK
FMT(4)=BLANK
212
ALPHA
FMT(5)=
ALPHA(N2)
No
N1=INDEX/255
N2=
MOD(INDEX,255)
CVNTCP
convert commas
to periods
N2=0
Yes
N2=255
N1=N1-1
READ(99,FMT)
L,VECTOR
ALPHA
FMT(2)=
ALPHA(N1)
IVEC=IVEC+1
INDEX=
INDEX+126
212
IVEC>
NVEC
Yes
IVEC=1
INDEX+126>IEND
or
IVEC=1 and INDEX+132>IEND
Yes
IREAD
= .true.
RETURN

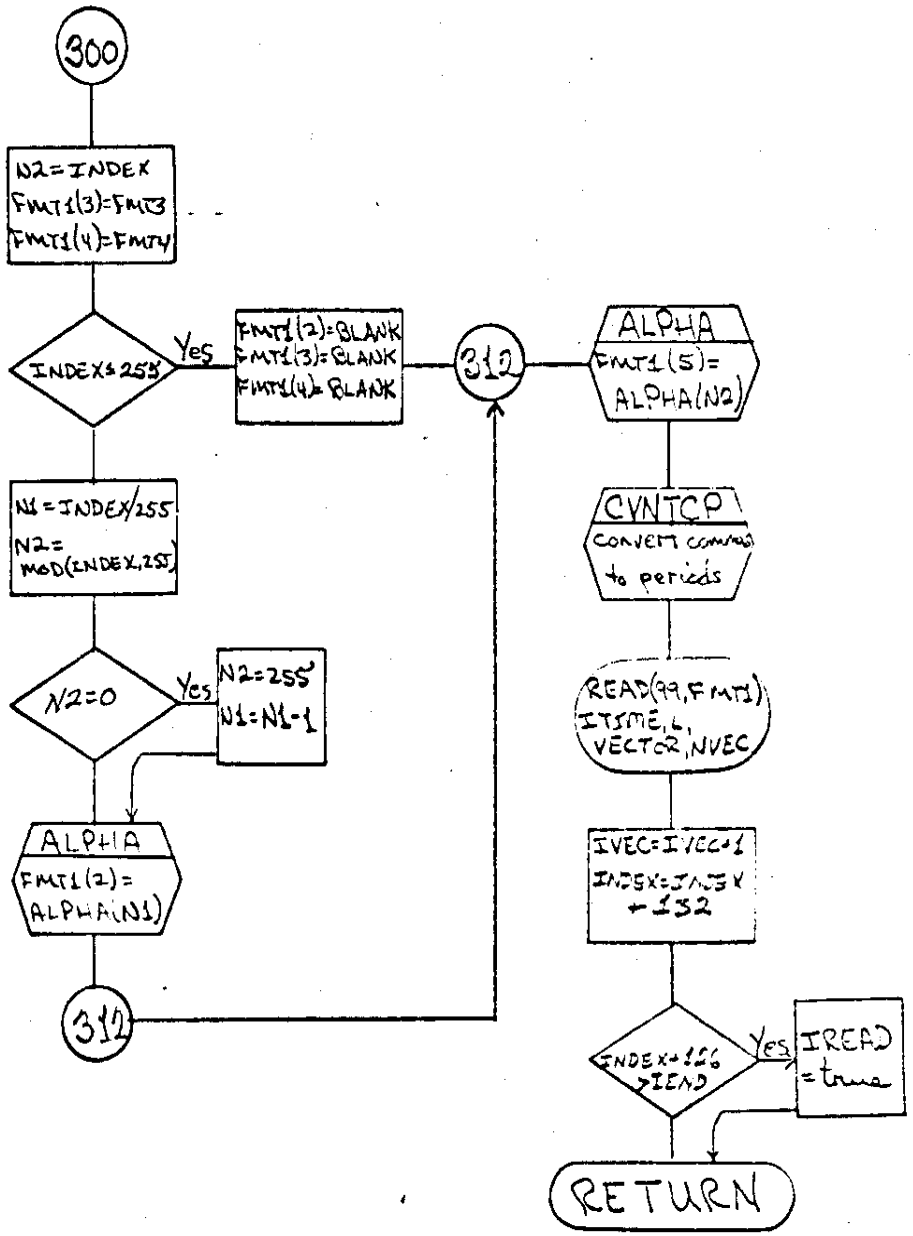
300
N2=INDEX
FMT1(3)=FMT3
FMT1(4)=FMT4
INDEX=255
Yes
FMT1(2)=BLANK
FMT1(3)=BLANK
FMT1(4)=BLANK
312
ALPHA
FMT1(5)=
ALPHA(N2)
N1=INDEX/255
N2=
MOD(INDEX,255)
CVNTCP
convert commas
to periods
N2=0
Yes
N2=255
N1=N1-1
READ(99,FMT1)
ITIME,L,
VECTOR,NVEC
ALPHA
FMT1(2)=
ALPHA(N1)
IVEC=IVEC+1
INDEX=INDEX
+132
312
INDEX+126
>IEND
Yes
IREAD
=true
RETURN

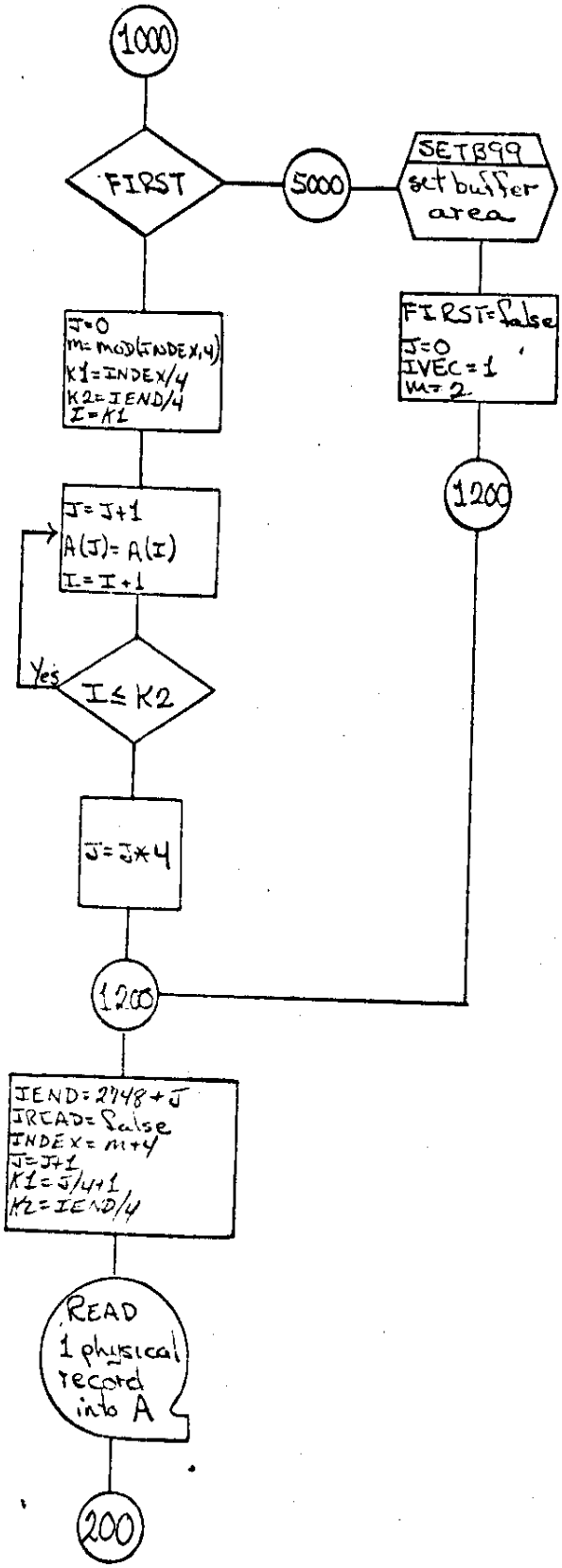
1000
FIRST
5000
SETB99
set buffer area
FIRST=false
J=0
IVEC=1
M=2
1200
J=0
m=MOD(INDEX,4)
K1=INDEX/4
K2=IEND/4
I=K1
J=J+1
A(J)=A(I)
I=I+1
Yes
I≤K2
J=J*4
1200
IEND=2748+J
IREAD=false
INDEX=m+4
J=J+1
K1=J/4+1
K2=IEND/4
READ 1 physical record into A
200

2.2 SUBROUTINE CNVTCP

2.2.1 Purpose

When the IBM 7040/7094 DCS writes a blocked tape it does not translate characters from internal Storage format to tape format (Table 2-1). Numbers have the same code, except for zero which seems to read satisfactorily. Blanks show up as ampersands, which read correctly, but periods show up as commas. This subroutine converts the commas to periods.

2.2.2 Calling Sequence

CALL CNVTCP (A, INDEX)

where A is the array containing the data, INDEX is the byte of A where the last vector ended.

2.2.3 Key Variables

CHAR	Array of masks to select one character from a word
COMMA	Array of masks to check for comma in any of the four character positions
I	Index of word in A being checked or changed
J	Position of character in word of A being checked or changed
K1	Index of first word of A to be checked
PERIOD	Array of masks to change comma to period in any of four character positions

APPENDIX B — TABLE OF SOURCE PROGRAM CHARACTERS

CHARACTER	CARD	BCD TAPE	STORAGE	CHARACTER	CARD	BCD TAPE	STORAGE	CHARACTER	CARD	BCD TAPE	STORAGE	CHARACTER	CARD	BCD TAPE	STORAGE
1	1	01	01	A	12 1	61	21	J	11 1	41	41	/	0 1	21	61
2	2	02	02	B	12 2	62	22	K	11 2	42	42	S	0 2	22	62
3	3	03	03	C	12 3	63	23	L	11 3	43	43	T	0 3	23	63
4	4	04	04	D	12 4	64	24	M	11 4	44	44	U	0 4	24	64
5	5	05	05	E	12 5	65	25	N	11 5	45	45	V	0 5	25	65
6	6	06	06	F	12 6	66	26	O	11 6	46	46	W	0 6	26	66
7	7	07	07	G	12 7	67	27	P	11 7	47	47	X	0 7	27	67
8	8	10	10	H	12 8	70	30	Q	11 8	50	50	Y	0 8	30	70
9	9	11	11	I	12 9	71	31	R	11 9	51	51	Z	0 9	31	71
blank	blank	20	60	+	12	60	20	-	11	40	40	0	0	12	60
=	8-3	13	13	.	12 8-3	73	33	$	11 8-3	53	53	,	0 8-3	33	73
-	8-4	14	14	)	12 8-4	74	34	*	11 8-4	54	54	(	0 8-4	34	74

NOTE: There are two - signs. Only the 11-punch minus sign can be used in FORTRAN source program cards. Either minus sign may be used in input data to the object program; object program output uses the 11-punch minus sign.

The character $ can be used in FORTRAN only as Hollerith text in a FORMAT statement.

Table 2-1

2.2.4 Method

The first word to be checked is the word containing the vector position (time words or blanks are skipped). The four characters in each word are checked until a comma is found. That character is changed to a period and every sixth character for fifteen more times is changed to a period.

The tests are performed on integers because the numbers are not really floating point and test as zero despite their bit configuration when floating point tests are used.

2.2.5 Comments

This method of course pre-supposes that the data is in core in EBCDIC. If the in core format is different, the masks at least must be different.

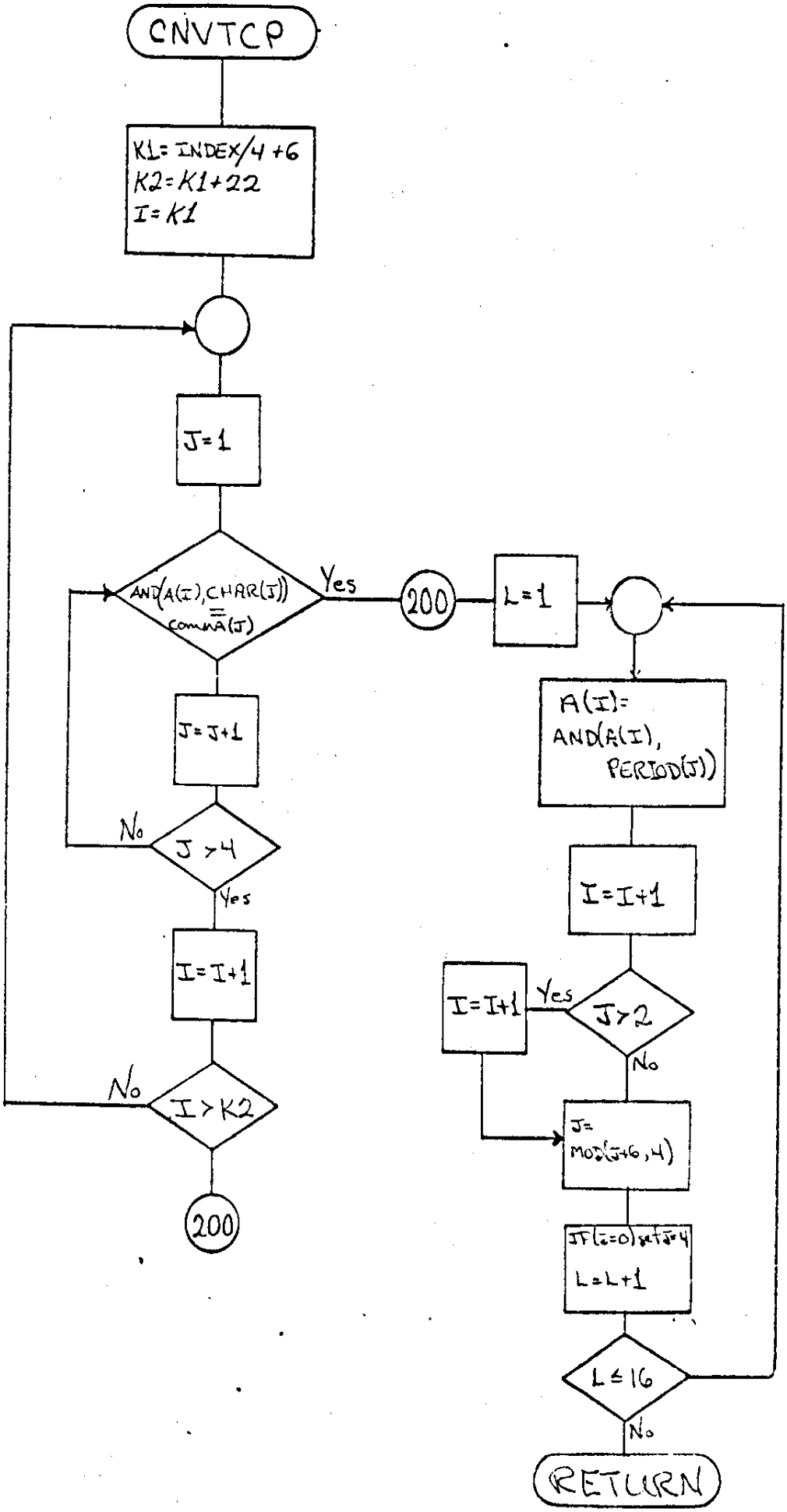
CNVTCP
K1= INDEX/4 +6
K2=K1+22
I=K1
J=1
AND(A(I),CHAR(J)) = COMMA(J)
Yes
200
L=1
J=J+1
No
J>4
Yes
I=I+1
No
I>K2
200
A(I)= AND(A(I), PERIOD(J))
I=I+1
I=I+1
Yes
J>2
No
J= MOD(J+6,4)
IF(J=0) set J=4
L=L+1
L≤16
No
RETURN

2.3 FUNCTION ALPHA

2.3.1 Purpose

This function generates the EBCDIC representation of an integer with four or fewer decimal digits.

2.3.2 Calling Sequence

KI = ALPHA(I)

where I is the integer to be converted and KI is the resulting characters right adjusted in the word.

2.3.3 Key Variables

J1	The left most digit
J2	The next digit
J3	The third digit from the left
ZONES	A mask to set the zone bits

2.3.4 Method

The digits are isolated by integer division. Then the characters are constructed by moving the digits to the appropriate positions (by multiplying by powers of two) and inserting the zone bits.

2.3.5 Comments

There is a faster way to accomplish the purpose of ALPHA. This alternate method is to make ALPHA an array of dimension 255 which is initialized with the character representations of the indices.

For example, ALPHA(10) would contain ' 10'.

Both methods are of course machine dependent.

Section 3

USAGE INSTRUCTIONS

3.1 DESCRIPTION

This set of three subprograms can be used to read logical records from a standard Explorer 33 or Explorer 35 Individual Vector tape.

3.2 SYSTEM AND EQUIPMENT

The program is written in FORTRAN IV for use on the IBM/360. The cards are punched in EBCDIC. As discussed elsewhere in this document, this program may not be usable on other machines. One seven-track tape drive is required.

3.3 CONTROL CARDS

The program expects the input tape to be mounted on FORTRAN logical unit 7. Thus for the IBM/360, data definition cards should have the form:

```
Col 1            Col 16                                                    Col 72
//GO.FT07F001    DD UNIT=TAPE,DISP=(OLD,KEEP),LABEL=(1,BLP),                X
//               DCB=(TRTCH=T,RECFM=F,DEN=1,LRECL=2760,BLKSIZE
                 =2760),                                                    X
//               VOLUME=SER=EXPIV
```

3.4 CALLING THE ROUTINE

The calling sequence is:

CALL IVREAD (ITIME, L, VECTOR, NVEC)

all of these variables are output from IVREAD.

ITIME is an integer array of size five which will contain the sequence number and time when return is made to the calling program after reading the first vector of a sequence. Reading other vectors does not reset ITIME.

L is the position of the vector in the original sequence (1-14). The first vector is not necessarily position 1, but positions are in ascending order.

VECTOR is a real array of size sixteen containing the data.

NVEC is the number of vectors in the sequence and is returned only by the first vector of a sequence. However it must have the correct value on subsequent calls since it is used internally by IVREAD. Figure 3-1 is the listing of a sample program which reads and prints thirty sequences.

```
0001          DIMENSION ITIME(5),VECTOR(16)
0002          DO 100 I=1,30
0003          CALL IVREAD(ITIME,L,VECTOR,NVEC)
0004          WRITE(6,10) ITIME,L,VECTOR,NVEC
0005     10   FORMAT(1X,I6,I4,3I3,I3,16F6.1,I6)
0006          N = NVEC
0007          DO 50 J=2,N
0008          CALL IVREAD(ITIME,L,VECTOR,NVEC)
0009          WRITE(6,11) L,VECTOR
0010     11   FORMAT(20X,I3,16F6.1)
0011     50   CONTINUE
0012    100   CONTINUE
0013          STOP
0014          END
```

Figure 3-1

Sample Program to Read and Print 30 Sequences

3.5 RESTRICTIONS

A complete tape descriptions is given in Appendix A. If the tape should develop a bad record (parity error, redundant record, etc.) the program will not detect it or compensate for it in any way. The exact treatment will depend on the computer operating system.

No test for end of data (end of file) is made in the reading routine.

Appendix A

DESCRIPTION OF THE EXPLORER INDIVIDUAL VECTOR TAPE

Box 8

TAPE S001D
EXPLORER 33
SEQUENCE AVERAGES
1968

Week	File	Decimal Days	# of Records
1	1	181.7-189.1	319
2	2	189.1-196.1	304
3	3	196.1-203.1	326
4	4	203.1-210.1	328
5	5	210.1-217.1	325
6	6	217.1-224.1	332
7	7	224.1-231.1	345
8	8	231.1-238.0	325
9	9	238.0-245.1	341
10	10	245.1-252.0	324

TAPE S011D
EXPLORER 33
SEQUENCE AVERAGES
1966

Week	File	Decimal Days	Records
11	1	252.0-259.1	343
12	2	259.1-266.1	330
13	3	266.3-273.0	308
14	4	273.0-280.1	316
15	5	280.1-287.1	333
16	6	287.1-294.1	345
17	7	294.1-301.1	345
18	8	301.1-308.1	341
19	9	308.1-315.0	351
20	10	315.0-322.1	353

TAPE S021D
EXPLORER 33
SEQUENCE AVERAGES
1966+1967

Week	File	Decimal Days	Records
21	1	322.1-329.2	360
22	2	~~336.1~~ 329.2-336.1	340
23	3	336.1-343.2	329
24	4	343.2-350.0	352
25	5	350.0-357.0	316
25A	6	354.1-355.1	70
26	7	357.0-364.0	306
27	8	364.0-005.9	348
28	9	006.4-014.0	177
29A	10	013.0-017.1	351
29B	11	017.8-020.2	118
30	12	020.2-027.1	354

TAPE S031D
EXPLORER 33
SEQUENCE AVERAGES
1967

Week	File	Decimal Days	Records
31A	1	027.1-032.1	252
31B	2	032.0-034.1	99
32	3	034.0-041.1	343
33	4	041.1-048.1	345
34	5	048.1-055.0	357
35	6	055.0-062.0	356
36	7	062.0-069.1	355
37	8	069.1-076.2	364
38	9	076.1-083.1	339
39	10	083.0-090.1	358
40	11	090.1-097.2	342

TAPE S041D
EXPLORER 33
SEQUENCE AVERAGES
1967

Week	File	Decimal Days	Records
41	1	097.2-104.1	334
42	2	104.0-111.0	355
43	3	111.0-118.0	348
44	4	118.0-125.1	357
45	5	125.0-132.2	350
46	6	132.2-139.0	323
47	7	139.0-146.1	307
48	8	146.0-153.2	358
49	9	153.1-160.1	329
50	10	160.1-167.0	341

TAPE S051D
EXPLORER 33
SEQUENCE AVERAGES
1967

Week	File	Decimal Days	Records
51	1	167.0-174.2	366
52A	2	174.2-179.2	254
52B	3	174.2-181.0	48
53A	4	181.0-186.5	271
53B	5	186.7-188.1	70
54	6	188.1-195.1	354
55	7	195.1-202.0	358
56A	8	202.1-207.0	248
56B	9	206.7-209.1	122
57	10	209.1-216.0	354
58	11	216.0-223.1	363
59	12	223.1-230.0	363
60	13	230.0-237.0	362

Box 8

Tape 5061D
Explorer 33
Sequence Recorder
1967

Week	No	Decimal Days	Records
61	1	237.0-244.0	360
62	2	244.0-251.0	358
63A	3	251.0-253.1	112
63B	4	253.1-258.1	250
64	5	258.1-265.1	350
65	6	265.1-272.1	359
66	7	272.1-279.0	344
67	8	279.0-286.1	336
68	9	286.1-293.1	357
69	10	293.6-300.1	352
70	11	300.1-307.1	362

Tape 5071D
Explorer 33
Sequence Recorder
1967 + 1968

Week	No	Decimal Days	Records
71	1	307.1-314.0	342
72	2	314.0-321.1	358
73	3	321.1-328.0	355
74	4	328.1-335.0	332
75	5	335.0-342.1	345
76A	6	342.1-343.5	69
76B	7	343.7-349.1	280
77	8	349.1-356.2	350
78	9	356.2-363.0	355
79	10	363.1-005.0	343
80	11	005.0-012.0	345

Tape 5081D
Explorer 33
Sequence Recorder
1968

Week	No	Decimal Days	Records
81	1	012.1-019.1	357
82	2	019.1-026.1	360
83	3	026.1-033.1	256
84	4	033.1-040.0	352
85	5	040.0-047.1	354
86	6	047.1-054.0	353
87	7	054.0-061.1	353
88	8	061.1-068.1	362
89	9	068.1-075.1	351
90	10	075.1-082.1	349

Tape 5091D
Explorer 33
Sequence Recorder
1968

Week	No	Decimal Days	Records
91	1	082.1-089.1	357
92	2	089.1-096.1	356
93	3	096.0-103.0	357
94	4	103.0-110.1	360
95	5	110.1-117.0	349
96	6	117.0-124.1	366
97	7	124.1-131.1	356
98	8	131.1-138.1	346
99	9	138.0-145.2	361
100	10	145.2-152.2	357

Box 9

Tape S101D
Explorer 33
Sequence Recordings
1968

Record	File	Decimal Days	Records
101	1	152.1-159.0	352
102	2	159.0-166.1	358
103	3	166.1-173.1	361
104	4	173.0-180.0	358
105	5	180.0-187.1	358
106	6	187.1-194.2	356
107	7	194.1-201.1	352
108	8	201.0-208.0	338
109	9	208.0-215.1	358
110	10	215.1-222.1	352

Tape S111D
Explorer 33
Sequence Recordings
1968

Record	File	Decimal Days	Records
111	1	222.1-229.0	333
112	2	229.0-236.0	351
113	3	236.0-243.0	347
114	4	243.0-250.0	354
115	5	250.0-257.1	355
116	6	257.1-264.0	343
117	7	264.0-271.1	350
118	8	271.1-278.0	321
119	9	278.1-285.2	357
120	10	285.2-292.0	338

Tape S121D
Explorer 33
Sequence Recordings
1968 DOB

Record	File	Decimal Days	Records
121	1	292.1-299.1	320
122	2	299.1-306.1	352
123	3	306.1-313.1	348
124	4	313.1-320.0	356
125	5	320.0-327.0	350
126	6	327.0-334.1	333
127	7	334.1-341.0	325
128	8	341.0-348.1	324
129	9	348.0-355.2	341
130	10	355.2-357.2	86
130B	11	357.2-362.0	193

Tape S131D
Explorer 33
Sequence Recordings
1968 + 1969

Record	File	Decimal Days	Records
131	1	362.0-003.1	347
132	2	003.1-010.1	331
133	3	010.1-017.1	334
134	4	017.1-024.1	331
135	5	024.1-031.0	317
136	6	031.0-038.0	297
137	7	038.0-045.1	244
138	8	045.1-052.1	247
139	9	052.1-059.1	257
140	10	059.1-061.0	107
140B	11	061.0-066.1	231

Tape S141D
Explorer 33
Sequence Recordings
1969

Record	File	Decimal Days	Records
141	1	066.1-073.0	307
142	2	073.0-080.1	295
143	3	080.1-087.2	303
144	4	087.2-094.1	302
145	5	094.1-101.1	322
146	6	101.1-108.0	333
147	7	108.0-115.1	352
148	8	115.1-122.1	304
149	9	122.1-129.0	[illegible]
150	10	129.0-136.1	306

Tape S151D
Explorer 33
Sequence Recordings
1969

Record	File	Decimal Days	Records
151	1	136.1-143.2	330
152	2	143.1-150.0	342
153	3	150.0-157.1	341
154	4	157.1-164.1	322
154B	5		21
155	6	164.1-171.1	312
156	7	171.1-178.1	34
157	8	[illegible]	[illegible]
158	9	185.1-192.1	322
159	10	192.1-199.1	293
160	11	199.0-206.1	272

Box 9

Tapes S161D
Explorer 33
Sequence Averages
1969

Decimal Days			
161	1	206.1-213.1	311
162	2	213.1-220.0	333
163	3	220.0-227.1	263
164	4	227.1-234.0	270
165	5	234.1-241.1	283
166	6	241.0-248.0	330
167	7	248.0-255.0	316
168	8	255.0-262.0	273
169	9	262.0-268.9	283
170	10	269.0-276.1	295

Tape S200D
Explorer 33
Sequence Average
1970

Decimal Days			
200	1	053.0-058.0	244
201	2	058.0-062.0	181
223	3	212.0-219.0	352
224	4	219.0-226.2	359
225	5	226.1-233.0	303
226	6	233.0-240.1	362
227	7	240.1-247.0	283
228	8	247.0-254.0	297
229	9	254.0-257.0	151

Tape S181D
Explorer 33
Sequence Averages
1969+1970

Decimal Days			
181	1	346.0-353.1	345
182	2	353.1-360.0	314
183	3	360.0-002.1	265
184	4		97
184	5	002.1-009.0	310
185	6	009.0-012.8	184

Tape S171D
Explorer 33
Sequence Averages
1969

Decimal Days			
171	1	276.1-283.0	330
172	2	[illegible]	[illegible]
173	3	290.0-297.1	280
174	4	297.1-304.0	293
175	5	304.1-311.0	299
176	6	311.0-318.0	329
177	7	318.0-325.1	333
178	8	325.1-332.0	300
179	9	332.0-339.0	298
180	10	339.1-346.0	332

The Explorer 33 and Explorer 35 sequence summary tapes have the following physical characteristics:

one file
density: 556 bpi
7-track
parity: odd
physical record length: 2760 characters (nominal)
BCD characters

The first twelve characters of each physical record contain the physical record count and tape number of the original tape. These twelve characters are skipped by the SAREAD routine. The first six characters are binary, the second six are BCD.

Each logical record is a sequence summary. The format of a sequence summary is shown in Figure A-1. Preceding every logical record is a six character word which contains binary information describing the preceding logical record (if any) and the following logical record.

We could view the final tape format as having been created in the following manner. All logical records are stored in order each preceded by its six character control word. Then a group of 2748 characters is picked off, prefixed by a twelve character physical record control word and placed on tape followed by an inter-record gap. The second physical record would contain the second 2748 characters prefixed by twelve control characters and followed by an inter-record gap. At the end of the data, the last physical record will contain however many characters remain less than or equal to 2742, suffixed by a six character logical record control

							Solar Equatorial						Solar				
	Sequence Number	Long	Hour	Min	Sec	Magnitude	Theta	Phi	Y	Z	Dev. Y	Dev. Z	Theta	Phi	X	Y	Z
length	7	4	3	3	3	5	6	6	5	5	5	5	6	6	5	5	5
representable	I	I	I	I	I	I	I	I	I	I	I	I	I	I	I	I	I
character	7	11	14	17	20	25	31	37	42	47	52	57	63	69	74	79	84

	Magnetospheric			Solar Ecliptic						
	Dev. X	Dev. Y	Dev. Z	Theta	Phi	Y	Z	Dev. Y	Dev. Z	
length	5	5	5	6	6	5	5	5	5	1
representable	I	I	I	I	I	I	I	I	I	X
character	89	94	99	105	111	116	121	126	131	132

Figure A-1
Sequence Summary Format

word and preceded by a twelve character control word then followed by a single end of file. A schematic representation of this concept is shown in Figure A-2.

Figure A-3 shows the twenty three formats which a physical record may have. These twenty three formats are also shown in the listing of the block data subprogram, but that form is hard to read.

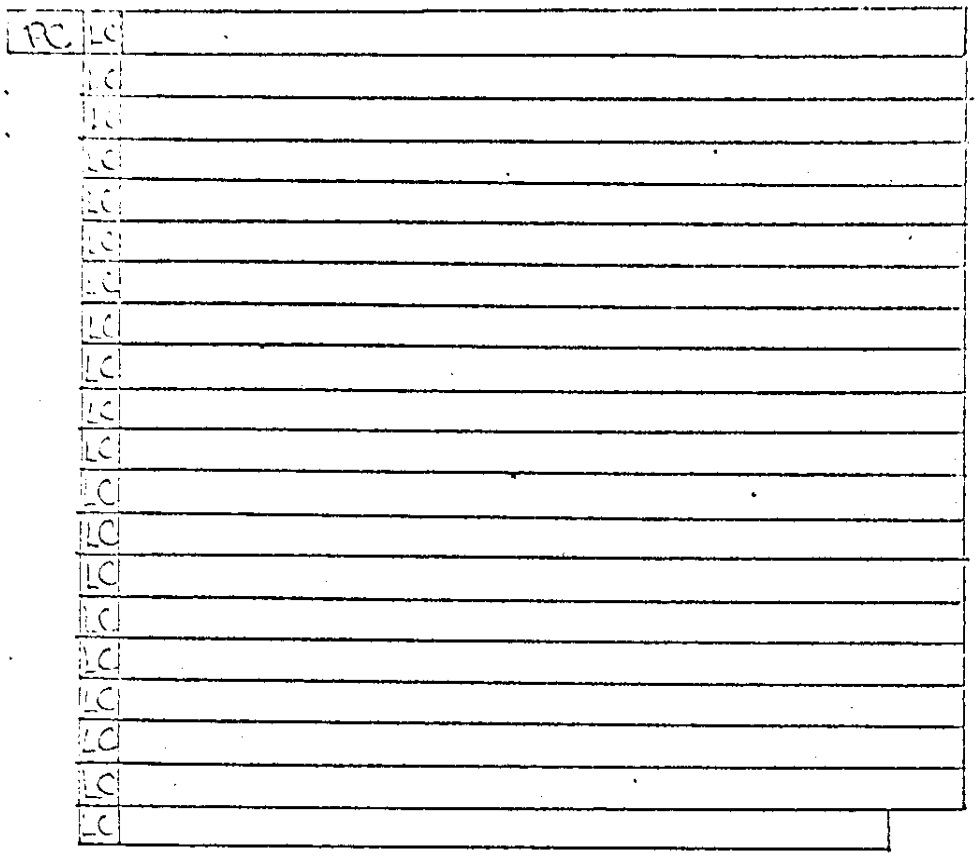

Record 1

LC = Logical Control Word
PC = Physical Control Word

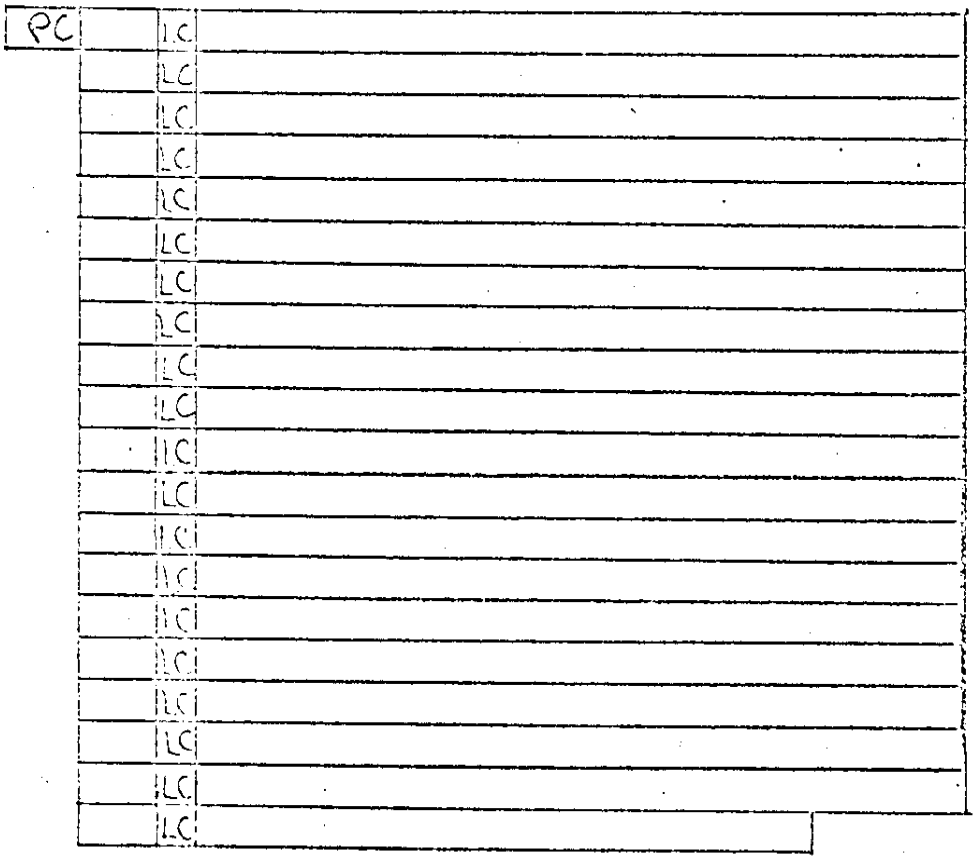

Record 2

FIGURE A-2
SCHEMATIC REPRESENTATION OF LOGICAL RECORDS
WITHIN PHYSICAL RECORDS

```
1  (12X,19(6X,I7,I4,3I3,I5,2I6,4I5,2I6,6I5,2I6,4I5,1X),6X,I7,I4,3I3,I5,2I6,4I5,2I6,6I5,2I6,I5,A4)
2  (12X,I1,4I5,1X,19(6X,I7,I4,3I3,I5,2I6,4I5,2I6,6I5,2I6,4I5,1X),6X,I7,I4,3I3,I5,2I6,4I5,2I6,6I5,I6,I3 )
3  (12X,I3,4I5,1X,19(6X,I7,I4,3I3,I5,2I6,4I5,2I6,6I5,2I6,4I5,1X),6X,I7,I4,3I3,I5,2I6,4I5,2I6,5I5,I2   )
4  (12X,I3,2I6,4I5,1X,19(6X,I7,I4,3I3,I5,2I6,4I5,2I6,6I5,2I6,4I5,1X),6X,I7,I4,3I3,I5,2I6,4I5,2I6,3I5   )
5  (12X,3I5,2I6,4I5,1X,19(6X,I7,I4,3I3,I5,2I6,4I5,2I6,6I5,2I6,4I5,1X),6X,I7,I4,3I3,I5,2I6,4I5,2I6,A3   )
6  (12X,I2,5I5,2I6,4I5,1X,19(6X,I7,I4,3I3,I5,2I6,4I5,2I6,6I5,2I6,4I5,1X),6X,I7,I4,3I3,I5,2I6,4I5,A3    )
7  (12X,I3,I6,6I5,2I6,4I5,1X,19(6X,I7,I4,3I3,I5,2I6,4I5,2I6,6I5,2I6,4I5,1X),6X,I7,I4,3I3,I5,2I6,2I5,I1 )
8  (12X,I4,I5,2I6,6I5,2I6,4I5,1X,19(6X,I7,I4,3I3,I5,2I6,4I5,2I6,6I5,2I6,4I5,1X),6X,I7,I4,3I3,I5,I6,I5  )
9  (12X,I1,4I5,2I6,6I5,2I6,4I5,1X,19(6X,I7,I4,3I3,I5,2I6,4I5,2I6,6I5,2I6,4I5,1X),6X,I7,I4,3I3,I4       )
10 (12X,I1,2I6,4I5,2I6,6I5,2I6,4I5,1X,19(6X,I7,I4,3I3,I5,2I6,4I5,2I6,6I5,2I6,4I5,1X),6X,I7,I4,I1      )
11 (12X,I2,2I3,I5,2I6,4I5,2I6,6I5,2I6,4I5,1X,19(6X,I7,I4,3I3,I5,2I6,4I5,2I6,6I5,2I6,4I5,1X),6X        )
12 (6X,19(6X,I7,I4,3I3,I5,2I6,4I5,2I6,6I5,2I6,4I5,1X),6X,I7,I4,3I3,I5,2I6,4I5,2I6,6I5,2I6,3I5         )
13 (12X,I5,1X,19(6X,I7,I4,3I3,I5,2I6,4I5,2I6,6I5,2I6,4I5,1X),6X,I7,I4,3I3,I5,2I6,4I5,2I6,6I5,2I6,A3  )
14 (12X,I2,3I5,1X,19(6X,I7,I4,3I3,I5,2I6,4I5,2I6,6I5,2I6,4I5,1X),6X,I7,I4,3I3,I5,2I6,4I5,2I6,6I5,A3  )
15 (12X,I3,I6,4I5,1X,19(6X,I7,I4,3I3,I5,2I6,4I5,2I6,6I5,2I6,4I5,1X),6X,I7,I4,3I3,I5,2I6,4I5,2I6,4I5,I1)
```

FIGURE A-3

THE PHYSICAL RECORD FORMATS

```
16  (12X,I4,I5,2I6,4I5,1X,19(6X,I7,I4,3I3,I5,2I6,4I5,2I6,6I5,2I6,4I5,1X),6X,I7,I4,3I3,I5,2I6,4I5,2I6,I5,A4)
17  (12X,I1,4I5,2I6,4I5,1X,19(6X,I7,I4,3I3,I5,2I6,4I5,2I6,6I5,2I6,4I5,1X),6X,I7,I4,3I3,I5,2I6,4I5,I6,A3    )
18  (12X,I3,6I5,2I6,4I5,1X,19(6X,I7,I4,3I3,I5,2I6,4I5,2I6,6I5,2I6,4I5,1X),6X,I7,I4,3I3,I5,2I6,3I5,I2       )
19  (12X,I3,2I6,6I5,2I6,4I5,1X,19(6X,I7,I4,3I3,I5,2I6,4I5,2I6,6I5,2I6,4I5,1X),6X,I7,I4,3I3,I5,2I6,I5       )
20  (12X,3I5,2I6,6I5,2I6,4I5,1X,19(6X,I7,I4,3I3,I5,2I6,4I5,2I6,6I5,2I6,4I5,1X),6X,I7,I4,3I3,I5,A4,A1       )
21  (12X,I1,I6,4I5,2I6,6I5,2I6,4I5,1X,19(6X,I7,I4,3I3,I5,2I6,4I5,2I6,6I5,2I6,4I5,1X),6X,I7,I4,2I3,I1       )
22  (12X,I2,I5,2I6,4I5,2I6,6I5,2I6,4I5,1X,19(6X,I7,I4,3I3,I5,2I6,4I5,2I6,6I5,2I6,4I5,1X),6X,I6            )
23  (12X,I1,I4,3I3,I5,2I6,4I5,2I6,6I5,2I6,4I5,1X,19(6X,I7,I4,3I3,I5,2I6,4I5,2I6,6I5,2I6,4I5,1X)           )
```

FILE 0001 REC 0001 CH 2760

D-19171

7/01/66 - 7/09/66

DAY - 181
YR - 66

DAY - 189
YR - 66

0001	002740000001	606060111002	000000000025	600403071002	600110016001	076003046001	056060026003	021133006060	
0049	031133026001	050133014002	020333036001	020333016002	000733106060	040533006001	060333114002	020333036060	
0097	060433046002	030233106060	040233016001	050633024002	020333036060	111033036002	020033066060	606060106060	
0145	000025000024	606060606060	606060606060	606060606060	606060036003	030133006060	031133076001	050033074002	
0193	020233016001	020433106002	010133036060	040533066001	060333074002	020233016060	060533016002	030633066060	
0241	040233066001	050533104002	020233016060	111133066002	020433036060	000024000024	606060606060	606060606060	
0289	606060606060	606060056003	030133006060	031133076001	050033074002	020233016001	020433106002	010133036060	
0337	040533066001	060333074002	020233016060	060533016002	030633066060	040233066001	050533104002	020233016060	
0385	111133066002	020433036060	000024000024	606060606060	606060606060	606060606060	606060066003	030133006060	
0433	031133076001	050033074002	020233016001	020433106002	010133036060	040533066001	060333074002	020233016060	
0481	060533016002	030633066060	040233066001	050533104002	020233016060	111133066002	020433036060	000024000024	
0529	606060606060	606060606060	606060606060	606060076003	021133006060	031133026001	050133014002	020333036001	
0577	020333016002	000733106060	040533006001	060333114002	020333036060	060433046002	030233106060	040233016001	
0625	050633024002	020333036060	111033036002	020033066060	000024000024	606060606060	606060606060	606060606060	
0673	606060106003	021133006060	031133026001	050133014002	020333036001	020333016002	000733106060	040533006001	
0721	060333114002	020333036060	060433046002	030233106060	040233016001	050633024002	020333036060	111033036002	
0769	020033066060	000024000024	606060606060	606060606060	606060606060	606060116003	021133006060	031133026001	
0817	050133014002	020333036001	020333016002	000733106060	040533006001	060333114002	020333036060	060433046002	
0865	030233106060	040233016001	050633024002	020033066060	111033036002	020033066060	000024000024	606060606060	
0913	606060606060	606060606060	606001006003	021133006060	031133026001	050133014002	020333036001	020333016002	
0961	000733106060	040533006001	060333114002	020333036060	060433046002	030233106060	040233016001	050633024002	
1009	020333036060	111033036002	020033066060	000024000025	600403071101	600110016001	076004066003	016060016003	
1057	000533026060	030133076001	050733044002	031133106060	111133066001	060033046060	030633036001	060733034002	
1105	031133106060	050433026001	100033116060	030433006001	060133044002	031133106060	100033056001	070033106060	
1153	606001026060	000025000024	606060606060	606060606060	606060606060	606060026003	000533026060	030133076001	
1201	050733044002	031133106060	111133066001	060033046060	030633036001	060733034002	031133106060	050433026001	
1249	100033116060	030433006001	060133044002	031133106060	100033056001	070033106060	000024000024	606060606060	
1297	606060606060	606060606060	606060036003	000233066060	030133066001	050633104002	030733006001	000133056001	
1345	051033056060	030633046001	060633064002	030733006060	050633056001	071133056060	030433006001	060033104002	
1393	030733006060	100233066001	061133016060	000024000024	606060606060	606060606060	606060606060	606060046003	
1441	000133026060	030133006001	050733034002	031033026060	111133106001	050533006060	030533076001	060633104002	
1489	031033026060	050533106001	070533076060	030333036001	060133024002	031033026060	100133036001	060533046060	
1537	000024000024	606060606060	606060606060	606060606060	606060056003	000433016060	030233026001	050633034002	
1585	030533106001	000333036001	060133116060	030733016001	060633034002	030533106060	050733036001	100333036060	
1633	030433066001	060033044002	030533106060	100333116001	070233106060	000024000024	606060606060	606060606060	
1681	606060606060	606060066003	000233066060	030133066001	050633104002	030733006001	000133056001	051033056060	
1729	030633046001	060633064002	030733006060	050633056001	071133056060	030433006001	060033104002	030733006060	
1777	100233066001	061133016060	000024000024	606060606060	606060606060	606060606060	606060076003	000133026060	
1825	030133006001	050733034002	031033026060	111133106001	050533006060	030533076001	060633104002	031033026060	
1873	050533106001	070533076060	030333036001	060133024002	031033026060	100133036001	060533046060	000024000024	
1921	606060606060	606060606060	606060606060	606060106003	000133026060	030133006001	050733034002	031033026060	
1969	111133106001	050533006060	030533076001	060633104002	031033026060	050533106001	070533076060	030333036001	
2017	060133024002	031033026060	100133036001	060533046060	000024000024	606060606060	606060606060	606060606060	
2065	606001006003	000233066060	030133066001	050633104002	030733006001	000133056001	051033056060	030633046001	
2113	060633064002	030733006060	050633056001	071133056060	030433006001	060033104002	030733006060	100233066001	
2161	061133016060	000024000024	606060606060	606060606060	606060606060	606001016003	000233066060	030133066001	
2209	050633104002	030733006001	000133056001	051033056060	030633046001	060633064002	030733006060	050633056001	
2257	071133056060	030433006001	060033104002	030733006060	100233066001	061133016060	000024000024	606060606060	
2305	606060606060	606060606060	606001026003	000133026060	030133006001	050733034002	031033026060	111133106001	
2353	050533006060	030533076001	060633104002	031033026060	050533106001	070533076060	030333036001	060133024002	
2401	031033026060	100133036001	060533046060	000024000024	606060606060	606060606060	606060606060	606001036003	
2449	000133026060	030133006001	050733034002	031033026060	111133106001	050533006060	030533076001	060633104002	
2497	031033026060	050533106001	070533076060	030333036001	060133024002	031033026060	100133036001	060533046060	
2545	000024000025	600403071102	600110016001	076004076005	036060016002	111133106060	030033036001	050733074002	
2593	031133046060	111033016001	050133056060	030533006001	060733014002	031133046060	050533006001	070133116060	
2641	030233066001	060133054002	031133046060	100033006001	060133106060	606001046060	000025000024	606060606060	
2689	606060606060	606060606060	606060026003	000033016060	030133046001	050633024002	030433026001	000333056001	
2737	050633056060	030633046001	060533114002	030433026060					

FILE 0001 REC 0002 CH 2760 PHYSICAL REC COUNT TIME

0001	002740000002	606060111002	051033116001	071033026060	030333116001	060033014002	030433026060	100433106001	
0049	060733046060	400024000024	606060606060	606060606060	606060036002	111033076060	030033106001		
0097	050633064002	030533046001	000133076001	050333006060	030533076001	060633014002	030533046060	051033016001	

D-19593

6/28/69 - 7/05/69

DAY - 178
YR - 69

He

DAY - 185
YR - 69

178

FILE 0001 REC 0001 CH 276C

0001	002040000001	606001110607	000000000025	011107040604	600107106060	026004106060	046060016060	601133036060	
0049	600633036001	061133066060	401133016060	600133076060	600133006060	600733116001	070033106060	401133016060	
0097	600133056060	600133036060	600733046001	070033046060	401133016060	600133056060	600133026060	606001046060	
0145	000025000024	606060606060	606060606060	606060606060	606060026060	601133106060	600633056001	070133026060	
0193	401133076060	600133056060	600133016060	600733116001	070233046060	401133076060	600133036060	600133046060	
0241	600733056001	070233006060	401133076060	600133046060	600133036060	000024000024	606060606060	606060606060	
0289	606060606060	606060036060	601133046060	600633046001	070133116060	401133036060	600133036060	600133016060	
0337	600733076001	070333016060	401133036060	600133016060	600733036001	070233076060	401133036060	600733036060	
0385	600133026060	600133026060	000024000024	606060606060	606060606060	606060606060	606060046060	601133046060	
0433	600633046001	070133116060	401133036060	600133036060	600133016060	600733076001	070333016060	401133036060	
0481	600133016060	600133036060	600733036001	070233076060	401133036060	600133026060	600133026060	000024000024	
0529	606060606060	606060606060	606060606060	606060056060	601133056060	600433016001	070233006060	401133046060	
0577	600133036060	600033076060	600533036001	070233106060	401133046060	600133026060	600033116060	600533006001	
0625	070233066060	401133046060	600133026060	600033106060	000024000024	606060606060	606060606060	606060606060	
0673	606060066060	601133056060	600433016001	070233006060	401133046060	600133036060	600033076060	600533036001	
0721	070233106060	401133046060	600133026060	600033116060	600533006001	070233066060	401133046060	600133026060	
0769	600033106060	000024000024	606060606060	606060606060	606060606060	606060076060	601133066060	600433036001	
0817	070433036060	401133056060	600133006060	600033076060	600533016001	070533016060	401133056060	600033106060	
0865	600033116060	600433116001	070433106060	401133056060	600033116060	600033106060	000024000024	606060606060	
0913	606060606060	606060606060	606060106060	601133046060	600333116001	061133106060	401133026060	600133076060	
0961	600033066060	600533056001	070033056060	401133026060	600133056060	600033116060	600533006001	070033036060	
1009	401133026060	600133066060	600033106060	000024000024	606060606060	606060606060	606060606060	606060116060	
1057	601133056060	600433016001	070233006060	401133046060	600133036060	600033076060	600533036001	070233106060	
1105	401133046060	600133026060	600033116060	600533006001	070233066060	401133046060	600133026060	600033106060	
1153	000024000024	606060606060	606060606060	606060606060	606001006060	601133116060	600433026001	070133036060	
1201	401133076060	600133056060	600033076060	600533066001	070233016060	401133076060	600133036060	600133006060	
1249	600533026001	070133116060	401133076060	600133046060	600033116060	000024000024	606060606060	606060606060	
1297	606060606060	606001016060	601133036060	600633036001	061133066060	401133016060	600133076060	600133006060	
1345	600733116001	070033106060	401133016060	600133056060	600133036060	600733046001	070033046060	401133016060	
1393	600133056060	600133026060	000024000024	606060606060	606060606060	606060606060	606001026060	601133076060	
1441	600633046001	061033116060	401133056060	600133116060	600133016060	601033016001	070033016060	401133056060	
1489	600133076060	600133046060	600733066001	061133106060	401133056060	600133076060	600133036060	000024000024	
1537	606060606060	606060606060	606060606060	606001036060	601133036060	600633036001	061133066060	401133016060	
1585	600133076060	600133006060	600733116001	070033106060	401133016060	600133036060	600733046001		
1633	070033046060	401133016060	600133056060	600133026060	000024000024	606060606060	606060606060	606060606060	
1681	606001046060	601133046060	600633046001	070133116060	401133036060	600133036060	600133016060	600733076001	
1729	070333016060	401133036060	600133016060	600133036060	600733036001	070233076060	401133036060	600133026060	
1777	600133026060	000024000025	011107040605	600107106060	026004116002	066060016060	601133026060	600633016001	
1825	060733036060	401133006060	600233006060	600133006060	601033016001	061033046060	401133006060	600133106060	
1873	600133036060	600733056001	061033006060	401133006060	600133116060	600133026060	606001036060	000025000024	
1921	606060606060	606060606060	606060606060	606060026060	601133046060	600633046001	070133116060	401133036060	
1969	600133036060	600133016060	600733076001	070333016060	401133036060	600133016060	600133036060	600733036001	
2017	070233076060	401133036060	600133026060	600133026060	000024000024	606060606060	606060606060	606060606060	
2065	606060036060	601133046060	600633046001	070133116060	401133036060	600133036060	600133016060	600733076001	
2113	070333016060	401133036060	600133016060	600133036060	600733036001	070233076060	401133036060	600133026060	
2161	600133026060	000024000024	606060606060	606060606060	606060606060	606060046060	601133046060	600633046001	
2209	070133116060	401133036060	600133036060	600133016060	600733076001	070333016060	401133036060	600133016060	
2257	600133036060	600733036001	070233076060	401133036060	600133026060	600133026060	000024000024	606060606060	
2305	606060606060	606060606060	606060056060	601133046060	600633046001	070133116060	401133036060	600133036060	
2353	600133016060	600733076001	070333016060	401133036060	600133016060	600733036001	070233076060		
2401	401133036060	600133026060	600133026060	000024000024	606060606060	606060606060	606060606060	606060066060	
2449	601133046060	600633046001	070133116060	401133036060	600133036060	600133016060	600733076001	070333016060	
2497	401133036060	600133016060	600133036060	600733036001	070233076060	401133036060	600133026060	600133026060	
2545	000024000024	606060606060	606060606060	606060606060	606060076060	601133036060	601033076001	061133056060	
2593	401133016060	600133076060	600133046060	010033036001	070133006060	401133016060	600133046060	600133076060	
2641	601133106001	070033066060	401133016060	600133056060	600133066060	000024000024	606060606060	606060606060	
2689	606060606060	606060106060	601133076060	601033076001	061033106060	401133046060	600133116060	600133056060	
2737	010033046001	070033046060	401133046060	600133066060					

FILE 0001 REC 0002 CH 276C

0001	002040000002	606001110607	600133106060	601133116001	061133116060	401133046060	600133076060	600133076060
0049	400024000024	606060606060	606060606060	606060606060	606060116060	601133036060	601033076001	061133056060
0097	401133016060	600133076060	600133046060	010033036001	070133006060	401133016060	600133046060	600133076060

See 66-058A-03C

5.12 SEC MAG VECTORS ON MAG TAPE

66-058A-03D

THIS DATA SET HAS BEEN RESTORED. THERE WERE ORIGINALLY 195 9-TRACK, 1600 BPI TAPES, WRITTEN IN BINARY. THERE ARE 19 RESTORED TAPES. THE TIME SPANS ARE NOT IN SEQUENTIAL ORDER. THE DR TAPES ARE ON 3480 CARTRIDGES AND THE DS TAPES ARE 9-TRACK, 6250 BPI. THE TAPES WERE CREATED ON AN IBM 360 COMPUTER. THE DR AND DS NUMBERS ALONG WITH THE CORRESPONDING D NUMBERS AND TIME SPANS ARE AS FOLLOWS:

DR#	DS#	DD#	FILES	TIME SPAN
DR03652	DS03652	D19171	1	07/01/66 - 07/09/66
		D19172	2	07/09/66 - 07/16/66
		D19173	3	07/16/66 - 07/23/66
		D19174	4	10/08/66 - 10/15/66
		D19175	5	10/15/66 - 10/22/66
		D19176	6	10/22/66 - 10/29/66
		D19177	7	10/29/66 - 11/05/66
		D19178	8	11/05/66 - 11/12/66
		D19179	9	11/12/66 - 11/19/66
		D19180	10	12/03/66 - 12/10/66
DR03653	DS03653	D19181	1	12/21/66 - 12/22/66
		D19182	2	12/24/66 - 12/31/66
		D19183	3	02/02/67 - 02/04/67
		D19184	4	12/31/66 - 01/06/67
		D19185	5	01/14/67 - 01/21/67
		D19186	6	01/18/67 - 01/21/67
		D19187	7	01/07/67 - 01/14/67
		D19188	8	01/21/67 - 01/28/67
		D19189	9	01/28/67 - 02/02/67
		D19190	10	02/04/67 - 02/11/67
		D19191	11	02/11/67 - 02/18/67
		D19192	12	02/18/67 - 02/25/67
		D19193	13	02/25/67 - 03/01/67
DR03654	DS03654	D19194	1	03/04/67 - 03/11/67
		D19195	2	03/11/67 - 03/18/67
		D19196	3	03/18/67 - 03/25/67
		D19197	4	03/25/67 - 04/01/67
		D19198	5	04/29/67 - 05/06/67
		D19199	6	05/06/67 - 05/13/67
		D19200	7	05/13/67 - 05/20/67
		D19201	8	05/20/67 - 05/27/67
		D19202	9	05/27/67 - 06/03/67
		D19203	10	06/03/67 - 06/10/67

66-058A-03D

DR#	DS#	DD#	FILES	TIME SPAN
DR03655	DS03655	D19204	1	06/10/67 - 06/17/67
		D19205	2	06/17/67 - 06/24/67
		D19206	3	06/24/67 - 06/29/67
		D19207	4	07/01/67 - 07/06/67
		D19208	5	07/06/67 - 07/08/67
		D19209	6	07/08/67 - 07/15/67
		D19210	7	07/15/67 - 07/22/67
		D19211	8	07/22/67 - 07/26/67
		D19212	9	07/29/67 - 08/05/67
		D19213	10	08/05/67 - 08/12/67
		D19214	11	08/12/67 - 08/19/67
		D19215	12	08/19/67 - 08/29/67
DR03656	DS03656	D19216	1	08/29/67 - 09/02/67
		D19217	2	09/02/67 - 09/09/67
		D19544	3	12/23/67 - 12/30/67
		D19545	4	12/16/67 - 12/23/67
		D19546	5	12/10/67 - 12/16/67
		D19547	6	12/09/67 - 12/10/67
		D19548	7	11/25/67 - 12/02/67
		D19549	8	11/18/67 - 11/25/67
		D19550	9	12/10/66 - 12/17/66
		D19551	10	11/04/67 - 11/11/67
DR03657	DS03657	D19552	1	10/28/67 - 11/04/67
		D19553	2	10/21/67 - 10/28/67
		D19554	3	10/14/67 - 10/21/67
		D19555	4	10/07/67 - 10/14/67
		D19556	5	09/30/67 - 10/07/67
DR03658	DS03658	D19557	1	09/23/67 - 09/30/67
		D19558	2	09/16/67 - 09/23/67
		D19559	3	09/11/67 - 09/16/67
		D19560	4	09/09/67 - 09/11/67
		D19561	5	03/02/68 - 03/09/68
		D19562	6	02/24/68 - 03/02/68
		D19563	7	02/17/68 - 02/23/68
		D19564	8	02/10/68 - 02/17/68
		D19565	9	02/03/68 - 02/10/68
		D19566	10	01/27/68 - 02/03/68
DR03659	DS03659	D19567	1	01/20/68 - 01/27/68
		D19568	2	01/13/68 - 01/20/68
		D19569	3	01/06/68 - 01/13/68
		D19570	4	12/30/67 - 01/06/68
		D19571	5	03/09/68 - 03/16/68
		D19572	6	03/16/68 - 03/23/68
		D19573	7	03/30/68 - 04/06/68
		D19574	8	04/06/68 - 04/13/68
		D19575	9	04/13/68 - 04/20/68
		D19576	10	04/20/68 - 04/27/68

66-058A-03D

DR#	DS#	DD#	FILES	TIME SPAN
DR03660	DS03660	D19577	1	04/27/68 - 05/04/68
		D19578	2	05/04/68 - 05/11/68
		D19579	3	05/11/68 - 05/18/68
		D19580	4	05/18/68 - 05/25/68
		D19581	5	08/03/68 - 08/10/68
		D19582	6	07/27/68 - 08/03/68
		D19583	7	07/20/68 - 07/27/68
		D19584	8	07/13/68 - 07/20/68
		D19585	9	07/06/68 - 07/13/68
		D19586	10	06/29/68 - 07/06/68
DR03661	DS03661	D19587	1	06/22/68 - 06/26/68
		D19588	2	06/15/68 - 06/22/68
		D19589	3	06/01/68 - 06/08/68
		D19590	4	05/25/68 - 06/01/68
		D19591	5	07/12/69 - 07/19/69
		D19592	6	07/05/69 - 07/12/69
		D19593	7	06/28/69 - 07/05/69
		D19594	8	06/21/69 - 06/28/69
		D19595	9	06/14/69 - 06/21/69
		D19596	10	06/07/69 - 06/14/69
DR03662	DS03662	D19597	1	06/13/69 - 06/14/69
		D19598	2	05/31/69 - 06/07/69
		D19599	3	10/19/68 - 10/26/68
		D19600	4	11/11/67 - 11/18/67
		D19601	5	08/17/68 - 08/24/68
		D19602	6	09/24/66 - 10/01/66
		D19603	7	09/17/66 - 09/23/66
		D19604	8	09/10/66 - 09/17/66
		D19605	9	09/03/66 - 09/09/66
		D19606	10	08/27/66 - 09/03/66
DR03663	DS03663	D19607	1	08/13/66 - 08/20/66
		D19608	2	08/06/66 - 08/13/66
		D19609	3	11/19/66 - 11/26/66
		D19610	4	10/01/66 - 10/08/66
		D19611	5	12/06/66 - 12/13/66
		D19612	6	11/29/66 - 12/06/66
		D19613	7	11/15/66 - 11/22/66
		D19614	8	11/08/66 - 11/15/66
		D19615	9	10/25/66 - 11/01/66
		D19616	10	10/18/66 - 10/25/66

66-058A-03D

DR#	DS#	DD#	FILES	TIME SPAN
DR03664	DS03664	D19617	1	10/11/66 - 10/17/66
		D19618	2	10/04/66 - 10/11/66
		D19619	3	09/27/66 - 10/04/66
		D19620	4	11/01/66 - 11/08/66
		D19621	5	08/15/70 - 08/22/70
		D19622	6	02/28/70 - 03/03/70
		D19623	7	02/23/70 - 02/28/70
		D19624	8	01/10/70 - 01/13/70
		D19625	9	09/12/70 - 09/14/70
		D19626	10	09/05/70 - 09/12/70
		D19627	11	08/29/70 - 09/05/70
		D19628	12	08/22/70 - 08/27/70
DR03665	DS03665	D19629	1	05/24/69 - 05/31/69
		D19630	2	05/17/69 - 05/24/69
		D19631	3	03/22/69 - 03/29/69
		D19632	4	03/03/69 - 03/08/69
		D19633	5	03/01/69 - 03/03/69
		D19634	6	02/22/69 - 03/01/69
		D19635	7	02/15/69 - 02/22/69
		D19636	8	02/01/69 - 02/07/69
		D19637	9	01/25/69 - 02/01/69
		D19638	10	01/18/69 - 01/25/69
DR03666	DS03666	D19639	1	01/11/69 - 01/18/69
		D19640	2	01/04/69 - 01/11/69
		D19641	3	12/20/69 - 12/27/69
		D19642	4	12/27/69 - 12/31/69
		D19643	5	01/01/69 - 01/03/69
		D19644	6	03/29/69 - 04/05/69
		D19645	7	04/05/69 - 04/12/69
		D19646	8	04/12/69 - 04/19/69
		D19647	9	04/19/69 - 04/26/69
		D19648	10	04/26/69 - 05/03/69
		D19649	11	05/03/69 - 05/10/69
		D19650	12	05/10/69 - 05/17/69
DR03667	DS03667	D19651	1	10/26/68 - 11/02/68
		D19652	2	11/02/68 - 11/09/68
		D19653	3	11/09/68 - 11/16/68
		D19654	4	11/16/68 - 11/23/68
		D19655	5	11/23/68 - 11/30/68
		D19656	6	11/30/68 - 12/07/68
		D19657	7	12/07/68 - 12/14/68
		D19658	8	12/14/68 - 12/21/68
		D19659	9	12/21/68 - 12/23/68
		D19660	10	12/23/68 - 12/28/68
		D19661	11	09/20/69 - 09/26/69
		D19662	12	09/13/69 - 09/19/69

66-058A-03D

DR#	DS#	DD#	FILES	TIME SPAN
DR03668	DS03668	D19663	1	09/06/69 - 09/12/69
		D19664	2	08/30/69 - 09/06/69
		D19665	3	08/23/69 - 08/30/69
		D19666	4	08/16/69 - 08/23/69
		D19667	5	08/09/69 - 08/16/69
		D19668	6	08/02/69 - 08/09/69
		D19669	7	07/26/69 - 08/02/69
		D19670	8	07/19/69 - 07/26/69
		D19671	9	02/08/69 - 02/15/69
		D19672	10	03/23/69 - 03/29/69
		D19673	11	08/24/69 - 08/31/69
DR03669	DS03669	D19674	1	09/07/69 - 09/14/69
		D19675	2	09/14/69 - 09/21/69
		D19676	3	09/21/69 - 09/28/69
		D19677	4	09/28/69 - 10/05/69
		D19678	5	10/05/69 - 10/12/69
		D19679	6	10/12/69 - 10/19/69
		D19680	7	01/03/70 - 01/10/70
		D20483	8	03/15/69 - 03/22/69
		D20484	9	12/02/67 - 12/09/67
		D20485	10	07/23/66 - 07/30/66
DR03670	DS03670	D20486	1	06/08/68 - 06/15/68
		D20487	2	07/30/66 - 08/07/66
		D20488	3	08/10/68 - 08/17/68
		D20489	4	08/01/70 - 08/08/70
		D20490	5	08/31/68 - 09/07/68
		D20491	6	12/13/69 - 12/20/69
		D20492	7	06/30/67 - 06/30/67
		D20493	8	11/22/69 - 11/28/69

IMP-D

82 SEC. AVGD. VECTORS, (REBLOCKED)

66-058A-03F

THIS DATA SET HAS BEEN RESTORED. THE ORIGINAL TAPES WERE 9-TRACK, 1600 BPI CONTAINING ONE FILE EACH. THE RESTORED TAPES ARE 9-TRACK, 6250 BPI CONTAINING MULTIPLE FILES. THE TAPES WERE CREATED ON AN IBM 360 COMPUTER. THE ORIGINAL TAPES WERE CREATED FROM DATA SET 66-058A-03C. THE DR TAPES ARE SQUARE AND THE DS TAPES ARE ROUND. THE DR AND DS NUMBERS ALONG WITH THE CORRESPONDING D NUMBERS AND THE TIME SPANS ARE AS FOLLOWS:

DR#	DS#	D#	FILES	TIME SPAN
DR02670	DS02670	D28119	1	07/01/66 - 09/09/66
		D28120	2	09/10/66 - 11/19/66
		D28121	3	11/19/76 - 01/28/67
		D28122	4	01/28/67 - 04/08/67
		D28123	5	04/08/67 - 06/17/67
		D28124	6	06/17/67 - 08/26/76
		D28125	7	08/26/67 - 11/04/67
		D28126	8	11/04/67 - 01/13/68
		D28127	9	01/13/68 - 03/23/68
		D28128	10	03/23/68 - 06/01/68
		D28129	11	06/01/68 - 08/10/68
		D28130	12	08/10/68 - 10/19/68
		D28131	13	10/19/68 - 12/28/68
		D28132	14	12/28/68 - 03/08/69
		D28133	15	03/08/69 - 05/17/69
		D28134	16	05/17/69 - 07/26/69
		D28135	17	07/26/69 - 10/04/69
		D28136	18	10/04/69 - 12/13/69
DR02671	DS02671	D28137	1	12/13/69 - 01/13/70
		D28138	2	02/23/70 - 09/14/70

REQ. AGENT	RAND NO.	ACQ. AGENT
VJP	RC6568	JHK

IMP-D

82 SEC. AVGD. VECTORS, (REBLOCKED)

66-058A-03F

This data set consists of 20 IMP-E data tapes. The tapes are EBCDIC ~~Binary~~, 9 track, 1600 BPI, and contains 1 file each. The tape were created on the IBM/360 computer. These tapes were created from data set 66-058A-03C.

D#	C#	TIME SPAN
D-28119	C-18463	7/01/66 - 9/09/66
D-28120	C-18464	9/10/66 - 11/19/66
D-28121	C-18465	11/19/66 - 1/28/67
D-28122	C-18466	1/28/67 - 4/08/67
D-28123	C-18467	4/08/67 - 6/17/67
D-28124	C-18468	6/17/67 - 8/26/67
D-28125	C-18469	8/26/67 - 11/04/67
D-28126	C-18470	11/04/67 - 1/13/68
D-28127	C-18471	1/13/68 - 3/23/68
D-28128	C-18472	3/23/68 - 6/01/68
D-28129	C-18473	6/01/68 - 8/10/68
D-28130	C-18474	8/10/68 - 10/19/68
D-28131	C-18475	10/19/68 - 12/28/68
D-28132	C-18476	12/28/68 - 3/08/69
D-28133	C-18477	3/08/69 - 5/17/69
D-28134	C-18478	5/17/69 - 7/26/69
D-28135	C-18479	7/26/69 - 10/04/69

D#	C#	TIME SPAN
D-28136	C-18480	10/04/69 - 12/13/69
D-28137	C-18481	12/13/69 - 1/13/70
D-28138	C-18482	2/23/70 - 9/14/70

RC5299

FORMAT OF REBLOCKED IMP-D

66-058A-03E

The reblocked tape is an unlabelled 9-track, 1600 bpi, binary tape created on an IBM/360 computer. Each logical record consists of 6 control bytes and 132 bytes of data. There are 200 logical records in a physical record. DCB statement to create tape was

DCB=(DEN=3,RECFM=FB,LRECL=2760,BLKSIZE=27600)

FORMAT OF LOGICAL RECORD

BYTES	LENGTH	TYPE	DESCRIPTION	
1- 6	6	A	7094 Control characters	
7-13	7	I	Sequence Number	
14-17	4	I	Day	
18-20	3	I	Hour	
21-23	3	I	Minute	
24-26	3	I	Second	
27-31	5	I	Magnitude	
32-37	6	I	Theta	Solar Equatorial
38-43	6	I	PHI	
44-48	5	I	Y	
49-53	5	I	Z	
54-58	5	I	Dev Y	
59-63	5	I	Dev Z	
64-69	6	I	Theta	Solar Magmetospheric
70-75	6	I	PHI	
76-80	5	I	X	
81-85	5	I	Y	
86-90	5	I	Z	

BYTES	LENGTH	TYPE	DESCRIPTION	
91-95	5	I	Dev X	
96-100	5	I	Dev Y	
101-105	5	I	Dev Z	
106-111	6	I	Theta	
112-117	6	I	PHI	
118-122	5	I	Y	Solar
123	5	I	Z	Ecliptic
128-132	5	I	Dev Y	
133-137	5	I	Dev Z	
138	1	X	Blank	

#1
7/01/66 - 9/09/66
D-28119

```
$JOB  17:22:07
$ASS IN MS2 SI TY
$EXEC DPHEX FS
 INPUT TAPE ON MS2
 DATA INPUT     1 1 1
  FILE  1       RECORD   1        LENGTH   27600BYTES
  (      0)   F9F0F0F0   F0C64040   F4F3F7F3   F240F1F8   F140F1F6   40F2F640   40F440F9   F9F9F940   F9F9F9F9   F940F9F9
  (     40)   F9F9F9F9   F9F9F9F9   F9F9F9F9   F9F9F9F9   F9F9F9F9   F9F9F940   F9F9F9F9   F940F9F9   F9F9F9F9   F9F9F9F9
  (     80)   F9F9F9F9   F9F9F9F9   F9F9F9F9   F9F9F9F9   F9F9F9F9   F9F9F9F9   F940F9F9   F9F9F940   F9F9F9F9   F9F9F9F9
  (    120)   F9F9F9F9   F9F9F9F9   F9F9F9F9   F9F9F9F9   F940F0F0   C6F0F0C6   4040F4F3   F7F3F340   F1F8F140   F1F640F2
  (    160)   F740F2F6   40F9F9F9   F940F9F9   F9F9F940   F9F9F9F9   F9F9F9F9   F9F9F9F9   F9F9F9F9   F9F9F9F9   F9F9F9F9
  (    200)   F940F9F9   F9F9F940   F9F9F9F9   F9F9F9F9   F9F9F9F9   F9F9F9F9   F9F9F9F9   F9F9F9F9   F9F9F9F9   F9F9F9F9
  (    240)   F9F9F940   F9F9F9F9   F940F9F9   F9F9F9F9   F9F9F9F9   F9F9F9F9   F9F9F9F9   F9F9F9F9   F9F9F940   F0F0C6F0
  (    280)   F0C64040   F4F3F7F3   F440F1F8   F140F1F6   40F2F840   F4F840F9   F9F9F940   F9F9F9F9   F940F9F9   F9F9F9F9
  (    320)   F9F9F9F9   F9F9F9F9   F9F9F9F9   F9F9F9F9   F9F9F940   F9F9F9F9   F940F9F9   F9F9F9F9   F9F9F9F9   F9F9F9F9
  (    360)   F9F9F9F9   F9F9F9F9   F9F9F9F9   F9F9F9F9   F9F9F9F9   F940F9F9   F9F9F940   F9F9F9F9   F9F9F9F9   F9F9F9F9
  (    400)   F9F9F9F9   F9F9F9F9   F9F9F9F9   F940F0F0   C6F0F0C6   4040F4F3   F7F3F540   F1F8F140   F1F640F3   F040F1F0
  (    440)   40F9F9F9   F940F9F9   F9F9F940   F9F9F9F9   F9F9F9F9   F9F9F9F9   F9F9F9F9   F9F9F9F9   F9F9F9F9   F940F9F9
  (    480)   F9F9F940   F9F9F9F9   F9F9F9F9   F9F9F9F9   F9F9F9F9   F9F9F9F9   F9F9F9F9   F9F9F9F9   F9F9F9F9   F9F9F940
  (    520)   F9F9F9F9   F940F9F9   F9F9F9F9   F9F9F9F9   F9F9F9F9   F9F9F9F9   F9F9F9F9   F9F9F940   F0F0C6F0   F0C64040
  (    560)   F4F3F7F3   F640F1F8   F140F1F6   40F3F140   F3F240F9   F9F9F9F9   F9F9F9F9   F940F9F9   F9F9F9F9   F9F9F9F9
  (    600)   F9F9F9F9   F9F9F9F9   F9F9F9F9   F9F9F940   F9F9F9F9   F940F9F9   F9F9F9F9   F9F9F9F9   F9F9F9F9   F9F9F9F9
  (    640)   F9F9F9F9   F9F9F9F9   F9F9F9F9   F9F9F9F9   F940F9F9   F9F9F940   F9F9F9F9   F9F9F9F9   F9F9F9F9   F9F9F9F9
  (    680)   F9F9F9F9   F9F9F9F9   F940F0F0   C6F0F0C6   4040F4F3   F7F3F740   F1F8F140   F1F640F3   F240F5F3   40F9F9F9
  (    720)   F940F9F9   F9F9F940   F9F9F9F9   F9F9F9F9   F9F9F9F9   F9F9F9F9   F9F9F9F9   F9F9F9F9   F940F9F9   F9F9F940
  (    760)   F9F9F9F9   F9F9F9F9   F9F9F9F9   F9F9F9F9   F9F9F9F9   F9F9F9F9   F9F9F9F9   F9F9F940   F9F9F9F9   F9F9F940
  (    800)   F940F9F9   F9F9F9F9   F9F9F9F9   F9F9F9F9   F9F9F9F9   F9F9F9F9   F9F9F940   F0F0C6F0   F0C64040   F4F3F7F3
  (    840)   F240F1F6   F140F1F6   40F3F440   F1F540F9   F9F9F940   F9F9F9F9   F940F9F9   F9F9F9F9   F9F9F9F9   F9F9F9F9
  (    880)   F9F9F9F9   F9F9F9F9   F9F9F940   F9F9F9F9   F940F9F9   F9F9F9F9   F9F9F9F9   F9F9F9F9   F9F9F9F9   F9F9F9F9
  (    920)   F9F9F9F9   F9F9F9F9   F9F9F9F9   F940F9F9   F9F9F940   F9F9F9F9   F9F9F9F9   F9F9F9F9   F9F9F9F9   F9F9F9F9
  (    960)   F9F9F9F9   F940F0F0   C6F0F0C6   4040F4F3   F7F3F540   F1F8F140   F1F640F3   F540F3F7   40F9F9F9   F940F9F9
  (   1000)   F9F9F940   F9F9F9F9   F9F9F9F9   F9F9F9F9   F9F9F9F9   F9F9F9F9   F9F9F9F9   F940F9F9   F9F9F940   F9F9F9F9
  (   1040)   F9F9F9F9   F9F9F9F9   F9F9F9F9   F9F9F9F9   F9F9F9F9   F9F9F9F9   F9F9F9F9   F9F9F940   F9F9F9F9   F940F9F9
  (   1080)   F9F9F9F9   F9F9F9F9   F9F9F9F9   F9F9F9F9   F9F9F9F9   F9F9F940   F0F0C6F0   F0C64040   F4F3F7F4   F040F1F8
  (   1120)   F140F1F6   40F3F640   F5F940F9   F9F9F940   F9F9F9F9   F940F9F9   F9F9F9F9   F9F9F9F9   F9F9F9F9   F9F9F9F9
  (   1160)   F9F9F9F9   F9F9F940   F9F9F9F9   F940F9F9   F9F9F9F9   F9F9F9F9   F9F9F9F9   F9F9F9F9   F9F9F9F9   F9F9F9F9
  (   1200)   F9F9F9F9   F9F9F9F9   F940F9F9   F9F9F940   F9F9F9F9   F9F9F9F9   F9F9F9F9   F9F9F9F9   F9F9F9F9   F9F9F9F9
  (   1240)   F940F0F0   C6F0F0C6   4040F4F3   F7F4F140   F1F8F140   F1F640F3   F840F2F1   40F9F9F9   F940F9F9   F9F9F940
  (   1280)   F9F9F9F9   F9F9F9F9   F9F9F9F9   F9F9F9F9   F9F9F9F9   F9F9F9F9   F940F9F9   F9F9F940   F9F9F9F9   F9F9F9F9
  (   1320)   F9F9F9F9   F9F9F9F9   F9F9F9F9   F9F9F9F9   F9F9F9F9   F9F9F9F9   F9F9F940   F9F9F9F9   F940F9F9   F9F9F9F9
  (   1360)   F9F9F9F9   F9F9F9F9   F9F9F9F9   F9F9F9F9   F9F9F940   F0F0C6F0   F0C64040   F4F3F7F4   F240F1F8   F140F1F6
  (   1400)   40F3F540   F4F340F9   F9F9F940   F9F9F9F9   F940F9F9   F9F9F9F9   F9F9F9F9   F9F9F9F9   F9F9F9F9   F9F9F9F9
  (   1440)   F9F9F940   F9F9F9F9   F940F9F9   F9F9F9F9   F9F9F9F9   F9F9F9F9   F9F9F9F9   F9F9F9F9   F9F9F9F9   F940F0F0
  (   1480)   F9F9F9F9   F940F9F9   F9F9F940   F9F9F9F9   F9F9F9F9   F9F9F9F9   F9F9F9F9   F9F9F9F9   F9F9F9F9   F940F0F0
  (   1520)   C6F0F0C6   4040F4F3   F7F4F340   F1F8F140   F1F640F4   F140F0F4   40F9F9F9   F940F9F9   F9F9F940   F9F9F9F9
  (   1560)   F9F9F9F9   F9F9F9F9   F9F9F9F9   F9F9F9F9   F9F9F9F9   F940F9F9   F9F9F940   F9F9F9F9   F9F9F9F9   F9F9F9F9
  (   1600)   F9F9F9F9   F9F9F9F9   F9F9F9F9   F9F9F9F9   F9F9F9F9   F9F9F940   F9F9F9F9   F940F9F9   F9F9F9F9   F9F9F9F9
  (   1640)   F9F9F9F9   F9F9F9F9   F9F9F9F9   F9F9F940   F0F0C6F0   F0C64040   F4F3F7F4   F440F1F8   F140F1F6   40F4F240
  (   1680)   F2F640F9   F9F9F940   F9F9F9F9   F940F9F9   F9F9F9F9   F9F9F9F9   F9F9F9F9   F9F9F9F9   F9F9F9F9   F9F9F940
  (   1720)   F9F9F9F9   F940F9F9   F9F9F9F9   F9F9F9F9   F9F9F9F9   F9F9F9F9   F9F9F9F9   F9F9F9F9   F9F9F9F9   F9F9F9F9
  (   1760)   F940F9F9   F9F9F940   F9F9F9F9   F9F9F9F9   F9F9F9F9   F9F9F9F9   F9F9F9F9   F9F9F9F9   F940F0F0   C6F0F0C6
  (   1800)   4040F4F3   F7F4F540   F1F8F140   F1F640F4   F340F4F6   40F9F9F9   F940F9F9   F9F9F940   F9F9F9F9   F9F9F9F9
  (   1840)   F9F9F9F9   F9F9F9F9   F9F9F9F9   F9F9F9F9   F940F9F9   F9F9F9F9   F9F9F940   F9F9F9F9   F9F9F9F9   F9F9F9F9
  (   1880)   F9F9F9F9   F9F9F9F9   F9F9F9F9   F9F9F9F9   F9F9F940   F9F9F9F9   F940F9F9   F9F9F9F9   F9F9F9F9   F9F9F9F9
  (   1920)   F9F9F9F9   F9F9F9F9   F9F9F940   F0F0C6F0   F0C64040   F4F3F7F4   F640F1F8   F140F1F6   40F4F540   F1F040F9
  (   1960)   F9F9F940   F9F9F9F9   F940F9F9   F9F9F9F9   F9F9F9F9   F9F9F9F9   F9F9F9F9   F9F9F9F9   F9F9F940   F9F9F9F9
  (   2000)   F940F9F9   F9F9F9F9   F9F9F9F9   F9F9F9F9   F9F9F9F9   F9F9F9F9   F9F9F9F9   F9F9F9F9   F9F9F9F9   F940F9F9
  (   2040)   F9F9F940   F9F9F9F9   F9F9F9F9   F9F9F9F9   F9F9F9F9   F9F9F9F9   F9F9F9F9   F940F0F0   C6F0F0C6   4040F4F3
  (   2080)   F7F4F740   F1F8F140   F1F540F4   F640F3F2   40F9F9F9   F940F9F9   F9F9F940   F9F9F9F9   F9F9F9F9   F9F9F9F9
  (   2120)   F9F9F9F9   F9F9F9F9   F9F9F9F9   F940F9F9   F9F9F940   F9F9F9F9   F9F9F9F9   F9F9F9F9   F9F9F9F9   F9F9F9F9
  (   2160)   F9F9F9F9   F9F9F9F9   F9F9F9F9   F9F9F940   F9F9F9F9   F940F9F9   F9F9F9F9   F9F9F9F9   F9F9F9F9   F9F9F9F9
  (   2200)   F9F9F9F9   F9F9F940   F0F0C6F0   F0C64040   F4F3F7F4   F840F1F8   F140F1F6   40F4F740   F5F340F9   F9F9F940
  (   2240)   F9F9F9F9   F940F9F9   F9F9F9F9   F9F9F9F9   F9F9F9F9   F9F9F9F9   F9F9F940   F9F9F9F9   F9F9F9F9   F940F9F9
  (   2280)   F9F9F9F9   F9F9F9F9   F9F9F9F9   F9F9F9F9   F9F9F9F9   F9F9F9F9   F9F9F9F9   F9F9F9F9   F940F9F9   F9F9F940
```

(22200)	40F24040	4040F240	404040F1	40404040	F140F0F0	C6F0F0C6	40F1F1F7	F9F0F440	F2F5F140	F2F140F5
(22240)	F640F2F8	40404040	F5404040	40F2F140	40F1F7F8	F4404040	40F24040	4040F340	40404040	40404040
(22280)	F1404040	40F1F740	40F1F7F7	F9404060	F9F34040	4040F340	40404040	40404040	F2404040	40F14040
(22320)	4040F140	40404040	F1404040	F7F8F440	40404040	40404040	F3404040	40F14040	4040F140	F0F0C6F0
(22360)	F0C640F1	F1F7F9F0	F540F2F5	F140F2F1	40F5F740	F5F04040	40F9F640	40404040	F7404040	F7F8F340
(22400)	40404040	40404040	F2404040	40F14040	4040F140	40404040	40404040	F3404040	F7F7F940	4060F9F5
(22440)	F3404040	40F24040	4040F240	40404040	40404040	F1404040	40F1F740	40F1F7F8	F3404040	40F24040
(22480)	40404040	40404040	40404040	F140F0F0	C6F0F0C6	40F1F1F7	F9F0F640	F2F5F140	F2F140F5	F940F1F2
(22520)	40404040	F4404040	40F1F740	40F1F7F8	F4404040	40F24040	4040F240	40404040	40404040	F1404040
(22560)	40F1F340	40F1F7F8	F1404060	F9F44040	4040F340	40404040	40404040	F1404040	40F14040	4040F140
(22600)	40404040	F7404040	F7F8F440	40404040	40404040	F2404040	40F14040	4040F140	F0F0C6F0	F0C640F1
(22640)	F1F2F9F0	F740F2F5	F140F2F2	4040F040	F3F440F9	F9F9F940	F9F9F9F9	F940F9F9	F9F9F9F9	F9F9F9F9
(22680)	F9F9F9F9	F9F9F9F9	F9F9F9F9	F9F9F940	F9F9F9F9	F940F9F9	F9F9F9F9	F9F9F9F9	F9F9F9F9	F9F9F9F9
(22720)	F9F9F9F9	F9F9F9F9	F9F9F9F9	F9F9F9F9	F940F9F9	F9F9F940	F9F9F9F9	F9F9F9F9	F9F9F9F9	F9F9F9F9
(22760)	F9F9F9F9	F9F9F9F9	F940F0F0	C6F0F0C6	40F1F1F7	F9F1F740	F2F5F140	F2F240F1	F440F1F2	40404040
(22800)	F540F040	40F4F140	40F1F7F7	F9404040	40F34040	4040F640	40404040	40404040	F1404040	40F3F640
(22840)	40F1F7F7	F1404060	F9F34040	4040F440	40404040	40404040	F3404040	40F14040	4040F140	40404040
(22880)	F14040F1	F7F7F840	40404040	40404040	F6404040	40F14040	4040F140	F0F0C6F0	F0C640F1	F1F7F9F1
(22920)	F840F2F5	F140F2F2	40F1F540	F3F34040	40F9F440	40404040	F7404040	F7F7F740	40404040	40404040
(22960)	F6404040	40F04040	4040F140	40404040	F2404040	F7F7F040	4060F9F3	40404040	F4404040	40F54040
(23000)	4040F140	40404040	F0404040	40F3F740	40F1F7F7	F7404040	40F34040	4040F640	40404040	40F3F440
(23040)	40404040	F140F0F0	C6F0F0C6	40F1F1F7	F9F1F940	F2F5F140	F2F240F1	F640F5F5	40404040	F4404040
(23080)	40F3F440	40F1F7F8	F4404040	40F24040	4040F540	40404040	40404040	F0404040	40F3F040	40F1F7F7
(23120)	F7404060	F9F44040	4040F340	40404040	40404040	F2404040	40F14040	4040F040	40404040	F34040F1
(23160)	F7F8F440	40404040	40404040	F5404040	40F14040	4040F040	F0F0C6F0	F0C640F1	F1F7F9F2	F040F2F5
(23200)	F140F2F2	40F1F540	F1F74040	40F9F640	40404040	40404040	F4404040	F7F8F140	40404040	40404040
(23240)	40F14040	4040F140	40404040	F0404040	F7F7F540	4060F9F7	40404040	F4404040	40F54040	4040F240
(23280)	40404040	40404040	F1404040	40F3F440	40F1F7F8	F1404040	40F34040	4040F540	40404040	40404040
(23320)	F140F0F0	C6F0F0C6	40F1F1F7	F9F2F140	F2F5F140	F2F240F1	F940F3F9	40404040	F9404040	40F3F440
(23360)	40F1F7F8	F5404040	40F24040	4040F540	40404040	40404040	F1404040	40F3F040	40F1F7F7	F8404060
(23400)	F9F94040	4040F340	40404040	40404040	F1404040	40F14040	4040F140	40404040	F4404040	F7F8F540
(23440)	40404040	40404040	F5404040	40F14040	4040F140	F0F0C6F0	F0C640F1	F1F7F9F2	F240F2F5	F140F2F2
(23480)	40F2F140	40F14040	40F9F940	40404040	F4404040	F7F8F540	40404040	40404040	F6404040	40F14040
(23520)	4040F140	40404040	F1404040	F7F7F940	4060F9F9	40404040	F3404040	40F54040	4040F240	40404040
(23560)	40404040	F1404040	40F3F440	40F1F7F8	F5404040	40F24040	4040F640	40404040	40404040	F140F0F0
(23600)	C6F0F0C6	40F1F1F7	F9F2F340	F2F5F140	F2F240F2	F240F2F2	40404040	F8404040	4040F040	40F1F7F8
(23640)	F1404040	40F34040	4040F640	40404040	40404040	F2404040	4060F340	40F1F7F8	F1404060	F9F74040
(23680)	4040F340	40404040	40404040	F2404040	40F34040	40F1F140	40404040	F0404040	F7F8F140	40404040
(23720)	40404040	F0404040	40F24040	40F1F240	F0F0C6F0	F0C640F1	F1F7F9F2	F440F2F5	F140F2F2	40F2F340
(23760)	F4F44040	F1F0F140	40404040	F8404040	F7F7F640	40404040	40404040	F4404040	40F14040	4040F040
(23800)	40404040	F2404040	F7F7F040	60F1F0F1	40404040	F5404040	40F44040	4040F240	40404040	40404040
(23840)	F0404040	40F2F840	40F1F7F7	F6404040	40F44040	4040F440	40404040	F040F0F0	C6F0F0C6	40F1F1F7
(23880)	40F1F1F7	F9F2F540	F2F5F140	F2F240F2	F5404040	4040F1F0	F2404040	40F2F840	40F1F7F7	F4404040
(23920)	40F44040	4040F540	40404040	40404040	F1404040	40F2F240	40F1F7F6	F9406040	F0F24040	4040F540
(23960)	40404040	40404040	F1404040	40F14040	4040F140	40404040	F7404040	F7F7F440	40404040	40404040
(24000)	F5404040	40F14040	4040F140	F0F0C6F0	F0C640F1	F1F7F9F2	F640F2F5	F140F2F2	40F2F640	F2F84040
(24040)	40F9F640	40404040	F1404040	F8F0F540	40406040	40404040	F1404040	F1F24040	4040F840	40404040
(24080)	F24040F1	F8F0F340	4060F9F4	40404060	F0404040	40F24040	40F1F840	4040F1F3	40404040	F5404040
(24120)	40F1F140	40F1F8F0	F6404040	60F14040	4040F140	4040F1F2	40404040	F840F0F0	C660F0C6	40F1F1F7
(24160)	F9F2F740	F2F5F140	F2F240F2	F740F5F0	4040F1F0	F1404040	40F3F540	40F1F7F8	F5404040	40F24040
(24200)	4040F640	40404040	40404040	F5404040	40F3F240	40F1F7F7	F84060F1	F0F04040	4040F340	40404040
(24240)	40404040	F3404040	40F94040	4040F340	40404040	F5404040	F7F8F540	40404040	40404040	F6404040
(24280)	40F34040	4040F540	60F0C6F0	F0C640F1	F1F7F9F2	F840F2F5	F140F2F2	40F2F940	F1F14040	F1F0F340
(24320)	40404040	F24040F1	F7F7F940	40404040	40404040	F9404040	40F24040	4040F140	40404040	F74040F1
(24360)	F7F8F940	60F1F0F3	40404040	F5404040	40F24040	4040F240	40404040	40404040	F1404040	40F5F240
(24400)	40F1F7F7	F9404040	40F34040	4040F940	40404040	40404040	F140F0F0	C6F0F0C6	40F1F1F7	F9F2F540
(24440)	F2F5F140	F2F240F2	F54040F6	4040F1F0	F2404040	40F2F940	40F1F7F7	F4404040	40F44040	4040F540
(24480)	40404040	40404040	F1404040	40F2F240	40F1F7F6	F9406040	F0F24040	4040F540	40404040	40404040
(24520)	F1404040	40F14040	4040F140	40404040	F7404040	F7F7F440	40404040	40404040	F5404040	40F14040
(24560)	4040F140	F0F0C6F0	F0C640F1	F1F7F9F2	F640F2F5	F140F2F2	40F2F640	F2F84040	40F9F640	40404040
(24600)	F14040F1	F0F0F640	40406040	40404040	F1404040	F1F24040	4040F840	40404040	F24040F1	F8F0F340
(24640)	4060F9F4	40404060	F0404040	40F24040	40F1F840	4040F1F3	40404040	F5404040	40F1F140	40F1F8F0
(24680)	F5404040	60F14040	4040F140	4040F1F2	40404040	F840F0F0	C6F0F0C6	40F1F1F7	F9F0F240	F2F5F140
(24720)	F2F140F5	F340F4F4	40404040	F8404040	40F2F040	40F1F7F8	F3404040	40F24040	4040F340	40404040
(24760)	40404040	F1404040	40F1F640	40F1F7F7	F9404060	F9F84040	4040F340	40404040	40404040	F1404040
(24800)	40F14040	4040F040	40404040	F0404040	F7F8F340	40404040	40404040	F3404040	40F14040	4040F140

REBLOCK PROGRAM

page 1

UNIT=6250 SHOULD BE USED ONLY WHEN THE USER SPECIFICALLY REQUIRES TAPE PROCESSING AT 6250 BPI. IT IS IMPORTANT TO NOTE THAT THE 360/75 WILL NOT SUPPORT 6250 BPI UNTIL OCTOBER 1977, WHEN ALL BUT TWO OF THE IBM 2400 9-TRACK DRIVES ON EACH COMPUTER WILL BE REPLACED BY STC DRIVES.

(4) TAPES IN SELF-LOADING CARTRIDGES WILL ONLY BE MOUNTED ON 6250 BPI DRIVES. TO PREVENT DAMAGE TO THE TAPE LEADERS ON THE OLD DRIVES, SEE THE SACC TAPE LIBRARIAN FOR INFORMATION ON OBTAINING SELF-LOADING CARTRIDGES OR ORDERING TAPES IN SELF-LOADING CARTRIDGES. CARTRIDGES MUST BE THE NARROW TYPE THAT FIT IN WRIGHT LINE 3820 TAPE STORAGE UNITS. SACC RECOMMENDS THAT ONLY HIGH-USAGE TAPES BE PLACED IN SELF-LOADING CARTRIDGES.

(5) THE STC TAPE DRIVES REQUIRE FLAT, UNWRINKLED TAPE LEADERS. IF THE OPERATOR ENCOUNTERS A LEADER THAT WILL NOT THREAD ON THE NEW DRIVES, THE LEADER WILL BE TRIMMED USING A SPECIAL CRIMPER. USERS SHOULD NOT TRY TO USE TAPES ON THE NEW DRIVES WITH LEADERS SHORTER THAN 8 FEET, AS THE LEADER CAN BE DAMAGED. THE TAPE DRIVE MANUFACTURER STRONGLY ADVISES AGAINST SPLICING OF NEW LEADERS ONTO TAPES BECAUSE OF THE POSSIBILITY OF SERIOUS DAMAGE TO THE READ/WRITE HEADS.

6292M211

```
*******          N O T I C E   P L E A S E   N O T I C E          *******

  M M L O A D   I S   N O W   S Y S 2 . L O A D   O N   3 6 0 / 9 1 A N D / 7 5
    ******                                                          *****
                R E T E N T I O N   C A R D S   A R E   D U E FRI. OCT.  29, 1976
  CONDENSE  MON. NOV. 1, 1976  0800.                TRKS NOW AVAILABLE ON DISK.
****  SYS2.LOADLIB        BLD. #1  RCOM  " 251  SYS2.LOADLIB  *******
```

```
//YZJPJJBM JOB (K100524058,T,KA0001,006003),601,MSGLEVEL=1,COND=(0,LT)  601A0090
//STEPA EXEC LABEL,VOL=JJ0020,LABEL=NL,DISP=REW
XXDEFAULT PROC  DRIVES=1,                (NUMBER OF DRIVES ALLOCATED)        00001000
XX        TRK=9,                         (EITHER 7 OR 9)     PROC - LABEL    00002000
XX        DEN=3,                         (DENSITY FOR LABELS)                00003000
XX        COUNT=1,                       (NUMBER OF TAPES TO BE LABELED)     00004000
XX        INCR=0,                        (ADDED TO EACH VOL TO GET NEW VOL)  00005000
XX        OWNER=' ',                     (ID--UP TO 10 BYTES--FOR SL TAPES)  00006000
XX        DISP=UNL,                      (UNL--UNLOAD AND REWIND TAPES:      00007000
***                                       REW--LEAVE VOL UP AFTER LABELING)   00008000
XX        LABEL=SL,                      (SL--STANDARD LABEL: NL--NO LABEL)  00009000
XX        OLDVOL=' ',                     (IF OLD LABEL EXISTS, THIS VOLUME  00010000
***                                       MUST CORRESPOND TO THAT ON LABEL.   00011000
***                                       MUST BE LEFT BLANK IF THERE IS NO   00012000
***                                       OLD LABEL.)                         00013000
XX        VOL='SCRTCH',                  (1ST VOL OF GROUP FOR LABELING, OR  00014000
***                                       A LIST OF VOLUMES - MAX OF 10)      00015000
XX        OUT=A                          (DEFAULT TO SYSOUT=A)               00016000
XXLABEL  EXEC  PGM=GSFLABEL,PARM=(&DRIVES,&TRK,&DEN,&COUNT,&INCR,            *00017000
IEF653I SUBSTITUTION JCL - PGM=GSFLABEL,PARM=(1,9,3,1,0,
XX            '&OWNER',&DISP,&LABEL,'''&OLDVOL''',                           *00018000
IEF653I SUBSTITUTION JCL - ' ',REW,NL,''' ''',
XX            '&VOL'),REGION=26K                                             00019000
IEF653I SUBSTITUTION JCL - 'JJ0020'),REGION=26K
XXSYSPRINT DD  SYSOUT=&OUT
IEF653I SUBSTITUTION JCL - SYSOUT=A                                          00020000
XXTAPELABL DD  UNIT=(2400-&TRK,&DRIVES,DEFER),DCB=(DEN=&DEN),                00021000
IEF653I SUBSTITUTION JCL - UNIT=(2400-9,1,DEFER),DCB=(DEN=3),
XX            DISP=(,PASS),DSN=&DSN,LABEL=(,&LABEL),                         00022000
IEF653I SUBSTITUTION JCL - DISP=(,PASS),DSN=&DSN,LABEL=(,NL),
XX            VOL=SER=(&VOL)                                                 00023000
IEF653I SUBSTITUTION JCL - VOL=SER=(JJ0020)
XXSYSABEND DD  SYSOUT=A
***                                                                          00024000
IEF244I YZJPJJBM.LABEL    .TAPELABL UNABLE TO ALLOCATE                 SFM  00025000
IEF247I YZJPJJBM ALLOCATION RECOVERY
IEF247I YZJPJJBM 006,007,008,009 OFFLINE
IEF238A REPLY DEVICE NAME , 'WAIT', OR 'CANCEL'
IEF236I ALLOC. FOR YZJPJJBM LABEL     STEPA
IEF237I 231    ALLOCATED TO SYSPRINT
IEF237I 006    ALLOCATED TO TAPELABL
IEF237I 331    ALLOCATED TO SYSABEND
```

Reblock Program
page 2

```
TAPE JJ0020:
TAPE JJ0020 HAS SUCCESSFULLY BEEN LABELED NL

IEF142I - STEP WAS EXECUTED - COND CODE 0000
IEF285I    SYS76303.T094509.SV000.YZJRJJBM.R0001182      SYSOUT
IEF285I    VOL SER NOS= K3SCR2.
IEF285I    SYS76303.T094509.RV000.YZJRJJBM.DSN           PASSED
IEF285I    VOL SER NOS= JJ0020.
IEF285I    SYS76303.T094509.SV000.YZJRJJBM.R0001183      DELETED
IEF285I    VOL SER NOS= K3SCR4.
IEF373I STEP /LABEL    / START 76303.1935
IEF374I STEP /LABEL    / STOP  76303.1941 CPU    0MIN 00.17SEC MAIN  16K LCS    0K
- STEP 01 -      RETURN CODE = 0000                                STEP TIME =      .00 MINS=(CPU=      .00,IO=      .00)
                                        IO IN SECS. DISK=      .40,DRUM=      .06,TAPE=      .05,CELL=      .00,OTHR=      .11
      //  EXEC FORTRANH
      XXDEFAULT PROC FORTRAN=IEKAA00,NBLK=40,OUT=A,BLKSIZE=7265     29 SEP 76  00000100
      XXSOURCE EXEC PGM=&FORTRAN,REGION=250K,PARM='OPT=2'       FORTRANH       00000200
      IEF653I SUBSTITUTION JCL - PGM=IEKAA00,REGION=250K,PARM='OPT=2'
      XXSTEPLIB DD DSN=SYS1.FORTH,DISP=SHR                                     00000300
      XXSYSLIN    DD  DSNAME=&&OBJMOD,DISP=(MOD,PASS),UNIT=SYSDA,             *00000400
      XX              SPACE=(3200,(&NBLK,10),,,ROUND),                        *00000500
      IEF653I SUBSTITUTION JCL - SPACE=(3200,(40,10),,,ROUND),
      XX              DCB=(,RECFM=FB,LRECL=80,BLKSIZE=3200)                    00000600
      XXSYSPRINT DD SYSOUT=&OUT,DCB=(RECFM=VBA,LRECL=137,BLKSIZE=&BLKSIZE)     00000700
      IEF653I SUBSTITUTION JCL - SYSOUT=A,DCB=(RECFM=VBA,LRECL=137,BLKSIZE=7265)
      XXSYSPUNCH DD  SYSOUT=B,DCB=(RECFM=FB,BLKSIZE=7280,LRECL=80)             00000800
      XXSYSUT1    DD  SPACE=(TRK,(0,5)),UNIT=(DISK,SEP=(SYSLIN,SYSPRINT)),    *00000900
      XX              DCB=(RECFM=FB,BLKSIZE=3465,LRECL=105)                    00001000
      XXSYSUT2    DD  SPACE=(TRK,(4,2)),UNIT=(DISK,SEP=(SYSLIN,SYSPRINT,      *00001100
      XX              SYSUT1))                                                 00001200
      XXSYSABEND DD SYSOUT=A                                                   00001300
      //SOURCE.SYSIN DD *
IEF236I ALLOC. FOR YZJRJJBM SOURCE
IEF237I 322    ALLOCATED TO STEPLIB
IEF237I 331    ALLOCATED TO SYSLIN
IEF237I 331    ALLOCATED TO SYSPRINT
IEF237I 331    ALLOCATED TO SYSPUNCH
IEF237I 232    ALLOCATED TO SYSUT1
IEF237I 333    ALLOCATED TO SYSUT2
IEF237I 232    ALLOCATED TO SYSABEND
IEF237I 231    ALLOCATED TO SYSIN

LEVEL  21.6  (DEC 72)                          OS/360  FORTRAN H                                  DATE  76.303/19.55.43

          COMPILER OPTIONS - NAME=  MAIN,OPT=02,LINECNT=82,SIZE=0000K,
                             SOURCE,EBCDIC,NOLIST,NODECK,LOAD,MAP,NOEDIT,ID,NOXREF
                C  RC 5299
                C  PROGRAM TO REBLOCK DATA TAPES FOR DATA SET 67-070A-03C
                C  REBLOCKED TAPES ARE FB 20RECORDS/BLOCK
                C  EACH LOGICAL RECORD 6CONTROL CHARACTERS + 132 DATA CHARACTERS
                C  OUTPUT DATA PUT IN ONE FILE
                C   THE FOLLOWING CARDS ARE USED IN THE SWIFT DECK PUNCHED IN COLS 1,10 20
                C              PARAM (BUF,LEN)
                C              MACHINE IBM7094
                C     CONVT    ENTER
                C              PUTIN      BUF
                C              SKIPWD     N=2
                C              CTOC       VAR=LEN
                C              EXIT       CONVT
                C              END
                C  SWIFT USED TO CONVERT 7094 CHARACTERS TO 360 CHARACTERS
                C
                C
   ISN 0002            LOGICAL*1 BUF(2760),BUFO(5520),BLANK
   ISN 0003            DATA BLANK/' '/
   ISN 0004            NREC = 0
   ISN 0005            NRECO = 0
   ISN 0006            IBUFP = 1
   ISN 0007            NPAR = 0
   ISN 0008            READ(5,10) NUMF1, NUMF2
   ISN 0009         10 FORMAT(I2,2X,I2)
   ISN 0010            NFILE = NUMF1
   ISN 0011            CALL INIT(BUF,LEN)
```

Reblock Program
page 3

```
ISN 0012          CALL SPOSN(2,9,NFILE)
ISN 0013      900 CALL SPOSN(1,8,NFILE)
ISN 0014     1000 CALL SREAD(8,LEN,&9000,&8000)
ISN 0015          LEN = 4*(LEN-9)/3
ISN 0016          CALL CONVT
ISN 0017          NREC = NREC + 1
ISN 0018          N2 = IBUFP + LEN - 1
ISN 0019          K = 0
ISN 0020          DO 2000 I=IBUFP,N2
ISN 0021          K = K + 1
ISN 0022     2000 BUFO(I) = BUF(K)
ISN 0023          IBUFP = N2 + 1
ISN 0024          IF(IBUFP.LT.2760) GO TO 1000
ISN 0026          CALL SWRITE(BUFO(1),9,2760)
ISN 0027          NRECO = NRECO + 1
ISN 0028          IBUFP = IBUFP - 2760
ISN 0029          DO 3000 I=1,IBUFP
ISN 0030     3000 BUFO(I) = BUFO(I+2760)
ISN 0031          GO TO 1000
                C
                C PARITY ERROR
                C
ISN 0032     8000 CONTINUE
ISN 0033          WRITE(6,80) NFILE, NREC
ISN 0034       80 FORMAT(10X,'PARITY ERROR READING FILE ',I2,'  RECORD ',I3)
ISN 0035          NPAR =NPAR + 1
ISN 0036          GO TO 1000
                C
                C EOF
                C
ISN 0037     9000 CONTINUE
ISN 0038          WRITE(6,90) NFILE, NREC, NPAR, NRECO
ISN 0039       90 FORMAT(10X,'FILE ',I2,'  # INPUT BLOCKS ',I3,'  # READ ERRORS ',
                 *          I3,'  # OUTPUT BLOCKS(20LOGICAL RECORDS) ',I3)
ISN 0040          IF(NFILE.EQ.NUMF2) GO TO 9100
ISN 0042          NFILE = NFILE + 1
ISN 0043          NREC = 0
ISN 0044          NPAR = 0
ISN 0045          NRECO = 0
ISN 0046          IBUFP = IBUFP-6
ISN 0047          IBUFID = IBUFP + 2
ISN 0048          IF(BUFO(IBUFID).EQ.BLANK) IBUFP = IBUFP - 66
ISN 0050     9010 CONTINUE
ISN 0051          IF(IBUFP.LT.1) IBUFP = 1
ISN 0053          GO TO 900
ISN 0054     9100 CONTINUE
ISN 0055          IF(IBUFP.EQ.1) GO TO  9050
ISN 0057          CALL SWRITE(BUFO,9,IBUFP)
ISN 0058          NRECO = NRECO + 1
ISN 0059     9050 CONTINUE
ISN 0060          CALL SLEAVE(9)
```

PAGE 002

```
ISN 0061          WRITE(6,91) NFILE
ISN 0062       91 FORMAT(10X,'EOJ,  NUMBER OF FILE PROCESSED ',I2)
ISN 0063          CALL SREWND(8)
ISN 0064          CALL SREWND(9)
ISN 0065          STOP
ISN 0066          END
```

/ MAIN / SIZE OF PROGRAM 002520 HEXADECIMAL BYTES PAGE 003

NAME	TAG	TYPE	ADD.	NAME	TAG	TYPE	ADD.	NAME	TAG	TYPE	ADD.	NAME	TAG	TYPE	ADD.
I	SF	I*4	000184	K	SF	I*4	000188	N2	SF	I*4	0001BC	BUF	SFA	L*1	0001E4
LEN	SFA	I*4	0001C0	BUFO	SFA	L*1	000CAC	INIT	SF XF	I*4	000000	NPAR	SF	I*4	0001C4
NREC	SF	I*4	0001C8	BLANK		L*1	000180	CONVT	SF XF	R*4	000000	IBUFP	SFA	I*4	0001CC
NFILE	SFA	I*4	0001D0	NRECO	SF	I*4	0001D4	NUMF1	SF	I*4	0001D8	NUMF2	S	I*4	0001DC
SPOSN	SF XF	R*4	000000	SREAD	SF XF	R*4	000000	IBCOM#	F XF	I*4	000000	IBUFID	S	I*4	0001E0
SLEAVE	SF XF	R*4	000000	SREWND	SF XF	R*4	000000	SWRITE	SF XF	R*4	000000				

PAGE 004

LABEL	ADDR	LABEL	ADDR	LABEL	ADDR	LABEL	ADDR
900	0022D6	1000	0022E8	2000	00234A	3000	00239A
8000	0023B2	9000	0023E6	9010	00246A	9100	002482
9050	0024AE						

OPTIONS IN EFFECT NAME= MAIN,OPT=02,LINECNT=82,SIZE=0000K,