#304

OSO-5

REDUCED SPECTROMETER DATA

69-006A-03A

OSO 5

REDUCED SPECTROMETER DATA

69-006A-03A

THIS DATA SET HAS BEEN RESTORED. ORIGINALLY IT CONTAINED 393 7-TRACK, 800 BPI TAPES WRITTEN IN BINARY. D016236, D16257-58, D16361, D22447 AND D017414 WERE BAD TAPES AND WERE NOT RESTORED. THERE ARE 71 RESTORED TAPES. THE DR TAPES ARE 3480 CATRIDGES AND THE DS TAPES ARE 9-TRACK, 6250 BPI. THE ORIGINAL TAPES WERE CREATED ON AN IBM 7094 COMPUTER AND WERE RESTORED ON AN IBM 9021 COMPUTER. THE DR AND DS NUMBERS ALONG WITH THE CORRESPONDING D NUMBERS AND TIME SPANS ARE AS FOLLOWS:

DR#	DS#	D#	FILES	TIME SPAN	
DR004741	DS004741	D016301	1-16	01/28/69 - 01/29/69	
		D016302	17-96	01/29/69 - 02/03/69	
		D016303	97-114	02/03/69 - 02/04/69	
DR004742	DS004742	D016304	1-79	02/05/69 - 02/09/69	
		D016305	80-102	02/10/69 - 02/11/69	
		D016306	103-162	02/11/69 - 02/15/69	
DR004966	DS004966	D016307	1-23	02/16/69 - 02/18/69	(a)
		D016308	24-103	02/18/69 - 02/23/69	(b)
		D016309	104-128	02/23/69 - 02/24/69	
DR004967	DS004967	D017415	1-80	02/24/69 - 03/01/69	(c)
		D016333	81-102	02/24/69 - 02/26/69	
		D016366	103-160	02/24/69 - 02/28/69	(d)
DR004968	DS004968	D016311	1-80	03/03/69 - 03/08/69	(e)
		D016312	81-99	03/08/69 - 03/08/69	
		D016229	100-157	03/10/69 - 03/13/69	
DR004995	DS004995	D016222	1-22	03/13/69 - 03/15/69	
		D016314	23-44	03/15/69 - 03/16/69	(f)
		D017416	45-126	03/16/69 - 03/21/69	
DR004996	DS004996	D016315	1-21	03/21/69 - 03/23/69	
		D016316	22-101	03/23/69 - 03/28/69	(g)
		D016235	102-126	03/28/69 - 03/29/69	(h)
DR004997	DS004997	D016574	1-58	03/30/69 - 06/20/69	
		D016318	59-80	04/02/69 - 04/04/69	
		D016237	81-100	04/04/69 - 04/05/69	
DR004998	DS004998	D016238	1	04/05/69 - 04/05/69	
		D016239	2-27	04/10/69 - 04/12/69	
		D016240	28-99	04/12/69 - 04/16/69	

DR#	DS#	D#	FILES	TIME SPAN
DR004999	DS004999	D016241	1-22	04/17/69 - 04/18/69
		D016242	23-102	04/18/69 - 04/23/69
		D016243	103-124	04/23/69 - 04/25/69
DR005000	DS005000	D016244	1-80	04/25/69 - 04/30/69
		D016245	81-102	04/30/69 - 05/02/69
		D016246	103-182	05/02/69 - 05/07/69
DR005001	DS005001	D016247	1-20	05/07/69 - 05/08/69
		D016248	21-41	05/14/69 - 05/15/69
		D016249	42-121	05/15/69 - 05/26/69
DR005002	DS005002	D016202	1-25	05/20/69 - 05/21/69
		D016203	26-35	05/22/69 - 05/26/69
		D016321	36-38	05/27/69 - 05/28/69
		D016430	39-118	05/28/69 - 06/02/69
DR005003	DS005003	D022444	1-25	06/02/69 - 06/02/69
		D016432	26-105	06/04/69 - 06/09/69
		D016433	106-126	06/09/69 - 06/10/69
DR005004	DS005004	D016434	1-80	06/10/69 - 06/15/69
		D016435	81-106	06/15/69 - 06/17/69
		D016436	107-166	06/17/69 - 06/21/69
DR005005	DS005005	D016437	1-26	06/21/69 - 06/22/69
		D016394	27-106	06/24/69 - 06/29/69
		D016440	107-131	06/29/69 - 06/30/69
DR005006	DS005006	D016441	1-80	06/30/69 - 07/05/69
		D016438	81-106	07/05/69 - 07/07/69
		D016439	107-186	07/07/69 - 07/12/69
DR005007	DS005007	D016425	1-23	07/12/69 - 07/13/69
		D016426	24-83	07/14/69 - 07/17/69
		D016428	84-130	07/17/69 - 07/20/69
DR005008	DS005008	D016429	1-60	07/20/69 - 07/24/69
		D016427	61-103	07/24/69 - 07/27/69
		D016486	104-183	07/27/69 - 08/01/69
DR005009	DS005009	D016487	1-22	08/01/69 - 08/02/69
		D016488	23-102	08/02/69 - 08/08/69
		D016489	103-121	08/08/69 - 08/09/69
DR005010	DS005010	D016442	1-80	08/09/69 - 08/14/69
		D016443	81-99	08/14/69 - 08/16/69
		D016444	100-159	08/16/69 - 08/20/69
DR005011	DS005011	D016445	1-40	08/20/69 - 08/22/69
		D016446	41-120	08/22/69 - 08/28/69
		D016447	121-142	08/28/69 - 08/29/69

69-006A-03A

DR#	DS#	D#	FILES	TIME SPAN
DR005012	DS005012	D016455	1-60	08/29/69 - 09/02/69
		D022441	61-101	09/02/69 - 09/05/69
		D016454	102-161	09/05/69 - 09/08/69
DR005013	DS005013	D016452	1-60	09/11/69 - 09/15/69
		D016449	61-101	09/15/69 - 09/18/69
		D016451	102-143	09/09/69 - 09/11/69
DR005014	DS005014	D016450	1-60	09/18/69 - 09/22/69
		D016448	61-104	09/22/69 - 09/24/69
		D016296	105-164	09/25/69 - 09/28/69
DR005015	DS005015	D016297	1-41	09/28/69 - 10/01/69
		D016294	42-101	10/01/69 - 10/05/69
		D016295	102-140	10/05/69 - 10/08/69
DR005016	DS005016	D016336	1-60	01/15/70 - 01/19/70
		D022442	61-118	10/08/69 - 10/12/69
		D016292	119-158	10/12/69 - 10/14/69
DR005017	DS005017	D016293	1-60	10/14/69 - 10/18/69
		D016288	61-99	10/18/69 - 10/21/69
		D016289	100-139	10/21/69 - 10/25/69
DR005018	DS005018	D016290	1-39	10/25/69 - 10/28/69
		D016285	40-99	10/28/69 - 11/01/69
		D016286	100-139	11/01/69 - 11/03/69
DR005019	DS005019	D016287	1-60	11/03/69 - 11/07/69
		D016283	61-102	11/07/69 - 11/10/69
		D016284	103-162	11/10/69 - 11/14/69
DR005020	DS005020	D016282	1-39	11/14/69 - 11/14/69
		D016280	40-99	11/17/69 - 11/21/69
		D016552	100-135	11/21/69 - 11/23/69
DR005070	DS005070	D022450	1-37	11/21/69 - 11/23/69
		D016278	38-97	11/23/69 - 11/27/69
		D016279	98-137	11/27/69 - 11/30/69
		D016276	138-197	11/30/69 - 12/04/69
		D016277	198-239	12/04/69 - 12/06/69
		D016274	240-299	12/06/69 - 12/10/69
		D016275	300-339	12/10/69 - 12/12/69
		D016320	340-399	12/26/69 - 12/30/69
DR005071	DS005071	D016544	1-41	12/17/69 - 12/20/69
		D016319	42-101	12/20/69 - 12/24/69
		D022440	102-142	12/24/69 - 12/26/69
		D016317	143-202	12/26/69 - 12/30/69
		D016299	203-243	12/30/69 - 01/02/70
		D016345	244-303	01/02/70 - 01/06/70
		D016298	304-340	01/06/70 - 01/09/70
		D016495	341-398	01/08/71 - 01/12/71

69-006A-03A

DR#	DS#	D#	FILES	TIME SPAN
DR005072	DS005072	D016334	1-60	01/09/70 - 01/13/70
		D016335	61-101	01/13/70 - 01/15/70
		D016291	102-161	01/15/70 - 01/19/70
		D016337	162-199	01/19/70 - 01/19/70
		D016338	200-259	01/22/70 - 01/26/70
		D016339	260-301	01/26/70 - 01/28/70
		D016340	302-359	01/28/70 - 02/01/70
		D016341	360-398	02/02/70 - 02/04/70
DR005073	DS005073	D016342	1-60	02/04/70 - 02/08/70
		D016343	61-101	02/08/70 - 02/11/70
		D016344	102-139	02/15/70 - 02/19/70
		D016525	140-167	02/17/70 - 02/19/70
		D016526	168-227	02/17/70 - 02/21/70
		D016527	228-265	02/21/70 - 02/24/70
		D016528	266-325	02/24/70 - 02/28/70
		D016529	326-366	03/03/70 - 03/06/70
DR005074	DS005074	D016530	1-60	03/03/70 - 03/07/70
		D016531	61-96	03/09/70 - 03/12/70
		D016532	97-156	03/16/70 - 03/20/70
		D016533	157-195	03/16/70 - 03/18/70
		D016534	196-234	03/09/70 - 03/12/70
		D016490	235-272	03/22/70 - 03/26/70
		D016491	273-332	03/22/70 - 03/26/70
		D016492	333-373	01/08/71 - 01/11/71
DR005075	DS005075	D016493	1-60	03/29/70 - 04/02/70
		D016494	61-103	04/02/70 - 04/05/70
		D016261	104-163	04/05/70 - 04/09/70
		D016204	164-201	04/15/70 - 04/18/70
		D016260	202-261	04/18/70 - 04/22/70
		D016255	262-302	04/22/70 - 04/25/70
		D016256	303-362	04/25/70 - 04/28/70
		D016262	363-402	04/09/70 - 04/11/70
DR005076	DS005076	D016253	1-41	05/05/70 - 05/08/70
		D016254	42-82	05/05/70 - 05/08/70
		D016252	83-142	05/08/70 - 05/12/70
DR005081	DS005081	D016346	1-41	05/12/70 - 05/14/70
		D016251	42-83	05/14/70 - 05/17/70
		D016250	84-125	01/09/70 - 01/11/70
		D016347	126-185	05/21/70 - 05/25/70
		D016580	186-225	05/25/70 - 05/28/70
		D016579	226-285	05/28/70 - 06/01/70
		D016549	286-324	06/01/70 - 06/03/70
		D016313	325-382	06/03/70 - 06/07/70

69-006A-03A

DR#	DS#	D#	FILES	TIME SPAN
DR005082	DS005082	D016547	1-37	06/07/70 - 06/10/70
		D016310	38-76	06/07/70 - 06/10/70
		D016548	77-136	06/10/70 - 06/14/70
		D016545	137-175	06/14/70 - 06/17/70
		D016546	176-235	06/17/70 - 06/21/70
		D016578	236-295	06/23/70 - 06/27/70
		D016576	296-335	06/27/70 - 06/30/70
		D016577	336-395	06/30/70 - 07/04/70
DR005083	DS005083	D016575	1-40	07/04/70 - 07/06/70
		D022443	41-100	07/06/70 - 07/10/70
		D016537	101-140	07/10/70 - 07/13/70
		D016535	141-180	07/17/70 - 07/20/70
		D016409	181-238	07/20/70 - 07/23/70
		D016410	239-296	07/20/70 - 07/23/70
		D016408	297-339	07/23/70 - 07/26/70
		D016407	340-381	07/24/70 - 07/26/70
DR005084	DS005084	D016406	1-60	07/26/70 - 07/30/70
		D016405	61-98	07/30/70 - 08/02/70
		D016397	99-158	08/02/70 - 08/06/70
		D016396	159-198	08/06/70 - 08/08/70
		D016395	199-258	08/09/70 - 08/12/70
		D016399	259-301	08/12/70 - 08/15/70
		D016398	302-361	08/15/70 - 08/19/70
		D016404	362-401	08/19/70 - 08/22/70
DR005085	DS005085	D016403	1-60	08/22/70 - 08/26/70
		D016402	61-99	08/26/70 - 08/28/70
		D016401	100-159	03/16/70 - 03/20/70
		D016400	160-198	08/28/70 - 08/31/70
		D016225	199-258	09/04/70 - 09/08/70
		D016475	259-298	12/16/70 - 12/19/70
		D016224	299-338	09/08/70 - 09/11/70
		D016223	339-418	09/11/70 - 09/16/70
DR005086	DS005086	D016386	1-58	09/11/70 - 09/14/70
		D016369	59-100	09/14/70 - 09/17/70
		D022448	101-121	09/16/70 - 09/17/70
		D016221	122-201	09/17/70 - 09/23/70
		D016220	202-222	09/23/70 - 09/24/70
		D016219	223-302	09/24/70 - 09/29/70
		D016218	303-322	09/29/70 - 09/30/70
		D016217	323-402	10/01/70 - 10/06/70
DR005087	DS005087	D016216	1-21	10/05/70 - 10/07/70
		D022446	22-79	10/07/70 - 10/11/70
		D022445	80-124	10/11/70 - 10/14/70

DR#	DS#	D#	FILES	TIME SPAN	
DR005159	DS005159	D016213	1-80	10/14/70 - 10/19/70	
		D016212	81-102	10/19/70 - 10/20/70	
		D016210	103-121	10/26/70 - 10/27/70	
		D016209	122-201	10/27/70 - 11/01/70	
		D016208	202-221	11/01/70 - 11/03/70	
		D016207	222-301	11/03/70 - 11/08/70	
		D016206	302-321	11/08/70 - 11/09/70	
		D016205	322-401	11/09/70 - 11/15/70	
DR005160	DS005160	D016469	1-12	11/15/70 - 11/16/70	
		D016470	13-70	11/16/70 - 11/20/70	
		D016471	71-114	11/20/70 - 11/22/70	
		D016472	115-172	11/22/70 - 11/26/70	
		D016473	173-217	11/26/70 - 11/29/70	
		D016474	218-275	11/29/70 - 12/03/70	
		D016484	276-333	12/06/70 - 12/09/70	
		D016485	334-376	12/03/70 - 12/06/70	
DR005161	DS005161	D016482	1-44	12/10/70 - 12/12/70	
		D016483	45-102	12/12/70 - 12/16/70	
		D016481	103-160	12/19/70 - 12/23/70	(j)
		D016480	161-204	12/23/70 - 12/26/70	
		D016479	205-262	12/26/70 - 12/29/70	
		D016478	263-304	12/29/70 - 01/01/71	
		D016476	305-362	01/01/71 - 01/05/71	
		D016477	363-406	01/05/71 - 01/08/71	
DR005162	DS005162	D016496	1-41	01/12/71 - 01/14/71	
		D016497	42-99	01/14/71 - 01/18/71	
		D016498	100-142	01/18/71 - 01/21/71	
		D016499	143-200	01/21/71 - 01/25/71	
		D016500	201-242	01/25/71 - 01/28/71	
		D016501	243-300	01/28/71 - 01/31/71	
		D016502	301-343	02/01/71 - 02/03/71	
		D016234	344-401	02/03/71 - 02/07/71	
DR005163	DS005163	D016233	1-42	02/07/71 - 02/10/71	
		D016505	43-100	02/10/71 - 02/14/71	
		D016506	101-141	02/14/71 - 02/16/71	
		D016507	142-199	02/17/71 - 02/20/71	
		D016508	200-241	02/20/71 - 02/23/71	
		D016211	242-285	02/27/71 - 03/02/71	
		D016466	286-343	03/01/71 - 03/06/71	
		D016513	344-384	03/06/71 - 03/08/71	
DR005164	DS005164	D016467	1-58	03/08/71 - 03/12/71	
		D016509	59-101	03/12/71 - 03/15/71	
		D016510	102-159	03/15/71 - 03/19/71	
		D016468	160-202	03/19/71 - 03/22/71	
		D016215	203-260	03/22/71 - 03/26/71	
		D016511	261-318	03/23/71 - 03/27/71	
		D016264	319-357	03/26/71 - 03/28/71	
		D016214	358-396	03/26/71 - 03/28/71	

69-006A-03A

DR#	DS#	D#	FILES	TIME SPAN
DR005165	DS005165	D016265	1-58	03/28/71 - 04/01/71
		D016266	59-97	04/01/71 - 04/04/71
		D016267	98-155	04/04/71 - 04/08/71
		D016268	156-195	04/08/71 - 04/10/71
DR005179	DS005179	D016269	1-58	04/10/71 - 04/14/71
		D016270	59-102	04/14/71 - 04/17/71
		D016271	103-144	04/17/71 - 04/20/71
		D016273	145-186	04/21/71 - 04/24/71
		D016272	187-244	04/24/71 - 04/28/71
		D016226	245-262	04/28/71 - 04/29/71
		D016227	263-320	04/30/71 - 05/04/71
		D016228	321-362	05/04/71 - 05/07/71
DR005180	DS005180	D016259	1-58	05/07/71 - 05/11/71
		D016230	59-99	05/11/71 - 05/14/71
		D022449	100-141	05/11/71 - 05/13/71
		D016231	142-199	05/14/71 - 05/17/71
		D016232	200-240	05/17/71 - 05/20/71
		D016281	241-298	05/20/71 - 05/24/71
		D016263	299-340	05/24/71 - 05/27/71
		D016522	341-398	05/27/71 - 05/31/71
DR005181	DS005181	D016521	1-36	05/31/71 - 06/02/71
		D016300	37-93	05/31/71 - 06/07/71
		D016520	94-151	06/02/71 - 06/06/71
		D016519	152-194	06/06/71 - 06/09/71
		D016518	195-252	06/09/71 - 06/13/71
		D016517	253-293	06/13/71 - 06/16/71
		D016515	294-351	06/16/71 - 06/19/71
		D016516	352-392	06/19/71 - 06/22/71
DR005182	DS005182	D016550	1-44	06/20/71 - 06/23/71
		D016514	45-102	06/22/71 - 06/26/71
		D016431	103-160	06/22/71 - 06/26/71
		D016420	161-204	06/26/71 - 06/29/71
		D016551	205-262	06/29/71 - 07/03/71
		D016555	263-304	07/03/71 - 07/05/71
		D016554	305-362	07/06/71 - 07/09/71
		D016553	363-420	07/12/71 - 07/16/71
DR005183	DS005183	D016558	1-43	07/16/71 - 07/19/71
		D016557	44-101	07/19/71 - 07/23/71
		D016556	102-144	07/23/71 - 07/25/71
		D016462	145-202	07/25/71 - 07/29/71
		D016460	203-246	07/29/71 - 08/01/71
		D016561	247-304	08/01/71 - 08/05/71
		D016560	305-345	08/05/71 - 08/08/71
		D016559	346-403	08/08/71 - 08/11/71

DR#	DS#	D#	FILES	TIME SPAN
R005184	DS005184	D016524	1-41	08/11/71 - 08/14/71
		D016523	42-99	08/14/71 - 08/18/71
		D016380	100-142	08/18/71 - 08/21/71
		D016379	143-200	08/21/71 - 08/25/71
		D016378	201-241	08/25/71 - 08/27/71
		D016377	242-299	08/27/71 - 09/01/71
		D016376	300-332	09/01/71 - 09/03/71
		D016375	333-390	09/03/71 - 09/07/71
DR005185	DS005185	D016374	1-34	09/07/71 - 09/10/71
		D016373	35-92	09/10/71 - 09/14/71
		D016372	93-131	09/14/71 - 09/16/71
		D016371	132-189	09/16/71 - 09/20/71
DR005188	DS005188	D016411	1-43	09/20/71 - 09/23/71
		D016370	44-101	09/23/71 - 09/27/71
		D016413	102-144	09/27/71 - 09/29/71
		D016412	145-202	09/30/71 - 10/03/71
		D016415	203-239	10/04/71 - 10/06/71
		D016414	240-297	10/06/71 - 10/10/71
		D016417	298-340	10/10/71 - 10/10/71
		D016416	341-398	10/13/71 - 10/16/71
DR005189	DS005189	D016382	1-40	10/17/71 - 10/19/71
		D016381	41-98	10/19/71 - 10/23/71
		D016350	99-137	10/23/71 - 10/26/71
		D016352	138-195	10/26/71 - 10/30/71
		D016351	196-232	10/30/71 - 11/02/71
		D016354	233-290	11/02/71 - 11/05/71
		D016353	291-331	11/05/71 - 11/08/71
		D016355	332-389	11/08/71 - 11/12/71
DR005190	DS005190	D016356	1-42	11/12/71 - 11/15/71
		D016349	43-100	11/15/71 - 11/19/71
		D016348	101-136	11/19/71 - 11/21/71
		D016393	137-194	11/21/71 - 11/25/71
		D016392	195-233	11/25/71 - 11/28/71
		D016391	234-291	11/28/71 - 12/02/71
		D016390	292-331	12/02/71 - 12/05/71
		D016383	332-389	12/05/71 - 12/09/71
DR005191	DS005191	D016385	1-42	12/09/71 - 12/11/71
		D016384	43-100	12/11/71 - 12/15/71
		D016387	101-137	12/15/71 - 12/18/71
		D016536	138-195	12/18/71 - 12/21/71
		D016389	196-223	12/23/71 - 12/24/71
		D016542	224-251	12/23/71 - 12/24/71
		D016388	252-309	12/25/71 - 12/29/71
		D016357	310-342	12/29/71 - 12/29/71

69-006A-03A

DR#	DS#	D#	FILES	TIME SPAN
DR005192	DS005192	D016358	1-58	12/31/71 - 01/04/72
		D016569	59-116	12/31/71 - 01/04/72
		D016570	117-159	01/04/72 - 01/07/72
		D016567	160-217	01/07/72 - 01/11/72
		D016568	218-257	01/11/72 - 01/13/72
		D016565	258-315	01/13/72 - 01/17/72
		D016566	316-353	01/17/72 - 01/20/72
		D016562	354-411	01/20/72 - 01/24/72
DR005193	DS005193	D016563	1-40	01/20/72 - 01/27/72
		D016564	41-98	01/27/72 - 01/31/72
		D016571	99-130	01/31/72 - 02/02/72
		D016572	131-188	02/03/72 - 02/08/72
		D016573	189-192	02/08/72 - 02/09/72
		D016538	193-217	04/22/72 - 04/29/72
		D016539	218-238	04/30/72 - 05/06/72
		D016540	239-259	05/06/72 - 05/11/72
DR005194	DS005194	D016541	1-27	05/12/72 - 05/18/72
		D016453	28-54	05/19/72 - 05/24/72
		D016543	55-78	05/24/72 - 05/31/72
		D016332	79-135	05/31/72 - 06/07/72
`R005217	DS005217	D016330	1-58	06/07/72 - 06/11/72
		D016331	59-116	06/07/72 - 06/11/72
		D016329	117-150	06/11/72 - 06/13/72
		D016328	151-208	06/14/72 - 06/18/72
		D016326	209-266	06/20/72 - 06/24/72
		D016325	267-324	06/27/72 - 07/04/72
		D016324	325	07/03/72 - 07/03/72
		D016323	326-376	07/04/72 - 07/10/72
DR005218	DS005218	D016322	1-47	07/10/72 - 07/16/72
		D016504	48-69	07/17/72 - 07/23/72
		D016368	70-92	07/24/72 - 07/30/72
		D016367	93-115	07/31/72 - 08/06/72
		D016503	116-144	08/10/72 - 08/13/72
		D016360	145-161	08/14/72 - 08/19/72
		D016359	162-184	08/20/72 - 08/26/72
		D016363	185-209	08/27/72 - 09/01/72
DR005219	DS005219	D016362	1-20	09/02/72 - 09/07/72
		D016365	21-27	09/09/72 - 09/14/72
		D016364	28-42	09/15/72 - 09/19/72
		D016327	43-73	06/18/72 - 06/20/72
		D016421	74-89	09/21/72 - 09/28/72
		D016422	90-106	09/29/72 - 10/05/72
		D016512	107-130	10/05/72 - 10/10/72
		D016419	131-148	10/12/72 - 10/16/72

DR#	DS#	D#	FILES	TIME SPAN
DR005220	DS005220	D016418	1-18	10/17/72 - 10/23/72
		D016424	19-75	10/24/72 - 10/29/72
		D016423	76-85	10/29/72 - 10/30/72
		D016465	86-143	10/30/72 - 11/04/72
		D016464	144-160	11/04/72 - 11/05/72
		D016463	161-183	11/06/72 - 11/12/72
		D016461	184-203	12/17/72 - 12/22/72
		D016458	204-223	12/17/72 - 12/22/72
		D016459	224-233	12/30/72 - 01/04/73
		D016456	234	01/04/73 - 01/04/73
		D016457	235	01/12/73 - 01/12/73

(a) D016307 - READ ERRORS OCCURRED IN RECORDS 3, 6, 7, FILE 1; RECORD 12, FILE 3; RECORDS 4, 6, 9, FILE 23
(b) D016308 - READ ERRORS OCCURRED IN RECORD 4, FILE 2; RECORD 18, FILE 61
(c) D017415 - READ ERRORS OCCURRED IN RECORD 3, FILE 2; RECORD 20, FILE 6; RECORDS 1, 4, FILE 11; RECORDS 5, 8, FILE 12; RECORD 9, FILE 17
(d) D016366 - READ ERROR OCCURRED IN RECORD 18, FILE 26
(e) D016311 - READ ERROR OCCURRED IN RECORD 10, FILE 24
(f) D016314 - READ ERROR OCCURRED IN RECORD 11, FILE 22
(g) D016316 - READ ERRORS OCCURRED IN RECORDS 3-5, FILE 1; RECORD 12, FILE 62; RECORD 8, FILE 66; RECORD 12, FILE 79; RECORD 17-20, FILE 80
(h) D016235 - READ ERROR OCCURRED IN RECORD 11, FILE 3
(i) D016318 - READ ERRORS OCCURRED IN RECORDS 11, FILE 11; RECORD 3, FILE 14; RECORD 20, FILE 22
(j) D016481 - READ ERROR OCCURRED IN RECORD 1009, FILE 50

REQ. AGENT	RAND NO.	ACQ. AGENT
CMT JVD	RC1866	CDW

69-006A-03A

OSO-5

REDUCED SPECTROMETER DATA

THIS DATA SET CONSISTS OF 386 TAPES WRITTEN IN BINARY IN ODD PARITY. THE TAPES ARE 7 TRACK WITH A DENSITY OF 800 BITS PER INCH (BPI) AND WERE CREATED ON A 7094 COMPUTER. THESE TAPES ARE MULTI-FILED. EACH TAPE HAS A 'RUN NUMBER'. THERE ARE 2 NUMBERS FOR EACH RUN, INDICATING THE 1ST OR 2ND TAPE FOR A PARTICULAR RUN NUMBER. THE TAPES ARE LISTED ON THE FOL-LOWING PAGES WITH NUMBER OF FILES AND TIME SPANS.

RUN#	D#	C#	FILES	TIME SPAN
0-2	D-16301	C-13798	16	01/28/69 - 01/29/69
1-1	D-16302	C-14892	80	01/29/69 - 02/03/69
1-2	D-16303	C-14893	18	02/03/69 - 02/04/69
2-1	D-16304	C-13799	79	02/05/69 - 02/09/69
2-2	D-16305	C-14894	23	02/10/69 - 02/11/69
3-1	D-16306	C-14895	60	02/11/69 - 02/15/69
3-2	D-16307	C-14896	23	02/16/69 - 02/18/69
4-1	D-16308	C-14904	80	02/18/69 - 02/23/69
4-2	D-16309	C-14905	25	02/23/69 - 02/24/69
5-1	D-17415	C-15067	80	02/24/69 - 03/01/69
5-2	D-16333	C-17413	22	02/24/69 - 02/26/69
5-2	D-16366	C-17414	58	02/24/69 - 02/28/69
6-1	D-16311	C-14907	80	03/03/69 - 03/08/69
6-2	D-16312	C-13800	19	03/08/69 - 03/10/69
7-1	D-16229	C-17415	58	03/10/69 - 03/13/69
7-2	D-16222	C-17427	22	03/13/69 - 03/15/69
7-2	D-16341	C-14903	22	03/15/69 - 03/16/69
8-1	D-17416	C-15064	80	03/16/69 - 03/21/69
8-2	D-16315	C-13801	21	03/21/69 - 03/23/69
9-1	D-16316	C-13802	80	03/23/69 - 03/28/69
9-2	D-16235	C-13555	25	03/28/69 - 03/29/69
9-2	D-16574	C-17545	59	03/30/69 - 06/20/69
10-1	D-16318	C-17416	22	04/02/69 - 04/04/69
10-2	D-16237	C-13556	20	04/04/69 - 04/05/69
11-1	D-16238	C-13557	80	04/05/69 - 04/10/69
11-2	D-16239	C-13558	26	04/10/69 - 04/12/69
12-1	D-16240	C-13559	72	04/12/69 - 04/16/69
12-2	D-16241	C-13560	22	04/17/69 - 04/18/69
13-1	D-16242	C-13679	80	04/18/69 - 04/23/69
13-2	D-16243	C-13680	22	04/23/69 - 04/25/69
14-1	D-15244	C-13681	80	04/25/69 - 04/30/69

RUN#	D#	C#	FILES	TIME SPAN
14-2	D-16245	C-13682	22	05/01/69 - 05/02/69
15-1	D-16246	C-13683	80	05/02/69 - 05/07/69
15-2	D-16247	C-13683	20	05/07/69 - 05/08/69
16-1	D-17411	C-14478	80	05/08/69 - 05/13/69
16-2	D-16248	C-13685	21	05/14/69 - 05/15/69
17-1	D-16249	C-13686	80	05/15/69 - 05/20/69
17-2	D-16202	C-13460	25	05/20/69 - 05/21/69
18-1	D-16203	C-13461	80	05/22/69 - 05/26/69
18-2	D-16321	C-17417	26	05/27/69 - 05/28/69
19-1	D-16430	C-14036	80	05/28/69 - 06/02/69
19-2	D-22444	C-17429	25	06/02/69 - 06/04/69
20-1	D-16432	C-14037	80	06/04/69 - 06/09/69
20-2	D-16433	C-14038	21	06/09/69 - 06/10/69
21-1	D-16434	C-14039	80	06/10/69 - 06/15/69
21-2	D-16435	C-14040	26	06/15/69 - 06/17/69
22-1	D-16436	C-14041	60	06/17/69 - 06/21/69
22-2	D-16437	C-14042	26	06/21/69 - 06/22/69
23-1	D-16395	C-13895	80	06/24/69 - 06/29/69
23-2	D-16440	C-14045	25	06/29/69 - 06/30/69
24-1	D-16641	C-14046	80	06/30/69 - 07/05/69
24-2	D-16438	C-14043	26	07/05/69 - 07/07/69
25-1	D-16439	C-14044	80	07/07/69 - 07/12/69
25-2	D-16425	C-13973	23	07/12/69 - 07/13/69
26-1	D-16426	C-14032	60	07/14/69 - 07/17/69
26-2	D-16428	C-14034	47	07/17/69 - 07/20/69
27-1	D-16429	C-14035	60	07/20/69 - 07/24/69
27-2	D-16427	C-14033	43	07/24/69 - 07/27/69
28-1	D-16486	C-14161	80	07/27/69 - 08/01/69
28-2	D-16487	C-14162	22	08/01/69 - 08/02/69
29-1	D-16488	C-14163	80	08/02/69 - 08/08/69
29-2	D-16489	C-14164	19	08/08/69 - 08/08/69
30-1	D-16442	C-14047	80	08/08/69 - 08/14/69
30-2	D-16443	C-14048	19	08/14/69 - 08/16/69
31-1	D-16444	C-14049	60	08/16/69 - 08/20/69
31-2	D-16445	C-14050	40	08/20/69 - 08/22/69
32-1	D-16446	C-14062	80	08/22/69 - 08/28/69
32-2	D-16447	C-14063	22	08/28/69 - 08/29/69
33-1	D-16455	C-14069	60	08/29/69 - 09/02/69
33-2	D-22441	C-17432	41	09/02/69 - 09/05/69
34-1	D-16454	C-14068	60	09/05/69 - 09/08/69
35-1	D-16452	C-14067	60	09/11/69 - 09/15/69
35-2	D-16449	C-14065	41	09/15/69 - 09/18/69
36-1	D-16450	C-14080	60	09/19/69 - 09/22/69
34-2	D-16451	C-14066	42	09/18/69 - 09/21/69
36-2	D-16448	C-14064	44	09/22/69 - 09/24/69
37-1	D-16296	C-13794	60	09/25/69 - 09/28/69
37-2	D-16297	C-13795	41	09/28/69 - 10/01/69
38-1	D-16294	C-13792	60	10/01/69 - 10/05/69
38-2	D-16295	C-13793	39	10/05/69 - 10/08/69
39-1	D-22442	C-17436	58	10/08/69 - 10/12/69
39-2	D-16292	C-13790	40	10/12/69 - 10/14/69
40-1	D-16293	C-13791	60	10/14/69 - 10/18/69
40-2	D-16288	C-13787	39	10/18/69 - 10/21/69

RUN#	D#	C#	FILES	TIME SPAN
41-1	D-16289	C-13788	60	10/21/69 - 10/25/69
41-2	D-16290	C-13789	39	10/25/69 - 10/28/69
42-1	D-16285	C-13784	60	10/28/69 - 11/01/69
42-2	D-16286	C-13785	40	11/01/69 - 11/03/69
43-1	D-16287	C-13786	60	11/03/69 - 11/07/69
43-2	D-16283	C-13782	42	11/07/69 - 11/10/69
44-1	D-16284	C-13783	60	11/10/69 - 11/14/69
44-2	D-16282	C-13781	39	11/14/69 - 11/17/69
45-1	D-16280	C-13719	60	11/17/69 - 11/21/69
45-2	D-16552	C-17544	36	11/21/69 - 11/23/69
46-1	D-16278	C-13717	60	11/23/69 - 11/27/69
46-2	D-16279	C-13718	40	11/27/69 - 11/30/69
47-1	D-16276	C-13715	60	11/30/69 - 12/04/69
47-2	D-16277	C-13716	42	12/04/69 - 12/06/69
48-1	D-16274	C-13713	60	12/06/69 - 12/10/69
48-2	D-16275	C-13714	40	12/10/69 - 12/13/69
49-1	D-16320	C-13805	60	12/13/69 - 12/17/69
49-2	D-16544	C-17410	41	12/17/69 - 12/20/69
50-1	D-16319	C-13804	60	12/20/69 - 12/24/69
50-2	D-22440	C-17431	41	12/24/69 - 12/26/69
51-1	D-16317	C-13803	60	12/26/69 - 12/30/69
51-2	D-16299	C-13797	41	12/30/69 - 01/02/70
52-1	D-16345	C-13858	60	01/02/70 - 01/06/70
52-2	D-16298	C-13796	37	01/06/70 - 01/09/70
53-1	D-16334	C-13806	60	01/09/70 - 01/13/70
53-2	D-16335	C-13807	41	01/13/70 - 01/15/70
54-1	D-16336	C-16431	60	01/15/70 - 01/19/70
54-2	D-16337	C-13808	38	01/19/70 - 01/19/70
55-1	D-16338	C-13809	60	01/22/70 - 01/26/70
55-2	D-16339	C-13810	42	01/26/70 - 01/28/70
56-1	D-16340	C-13811	60	01/28/70 - 02/01/70
56-2	D-16341	C-13812	39	02/02/70 - 02/04/70
57-1	D-16342	C-13813	60	02/04/70 - 02/08/70
57-2	D-16343	C-13814	41	02/08/70 - 02/11/70
58-1	D-16344	C-13857	60	02/11/70 - 02/15/70
58-2	D-16525	C-14318	28	02/15/70 - 02/17/70
59-1	D-16526	C-14319	60	02/17/70 - 02/21/70
59-2	D-16527	C-14320	38	02/21/70 - 02/24/70
60-1	D-16528	C-14321	60	02/24/70 - 02/28/70
60-2	D-16529	C-14322	41	02/28/70 - 03/03/70
61-1	D-16530	C-14323	60	03/04/70 - 03/07/70
61-2	D-16531	C-14324	36	03/07/70 - 03/09/70
62-1	D-16532	C-14325	60	03/09/70 - 03/13/70
62-2	D-16533	C-14326	39	03/13/70 - 03/16/70
63-1	D-16534	C-14327	60	03/16/70 - 03/20/70
63-2	D-16490	C-14165	38	03/20/70 - 03/22/70
64-1	D-16491	C-15057	60	03/22/70 - 03/26/70
64-2	D-16492	C-15059	41	03/26/70 - 03/29/70
65-1	D-16493	C-14166	60	03/29/70 - 04/02/70
65-2	D-16494	C-14167	43	04/02/70 - 04/05/70

RUN#	D#	C#	FILES	TIME SPAN
66-1	D-16261	C-13697	60	04/05/70 - 04/09/70
66-2	D-16262	C-13702	40	04/09/70 - 04/11/70
67-1	D-16258	C-13695	60	04/11/70 - 04/15/70
67-2	D-16204	C-17418	38	04/15/70 - 04/18/70
68-1	D-16260	C-13696	60	04/18/70 - 04/22/70
68-2	D-16255	C-13692	41	04/22/70 - 04/25/70
69-1	D-16256	C-13693	60	04/25/70 - 04/28/70
69-2	D-16257	C-13694	42	04/29/70 - 05/01/70
70-1	D-16253	C-13690	60	05/01/70 - 05/05/70
70-2	D-16254	C-13691	41	05/05/70 - 05/08/70
71-1	D-16252	C-13689	60	05/08/70 - 05/12/70
71-2	D-16346	C-13859	41	05/12/70 - 05/14/70
72-1	D-16251	C-13688	42	05/14/70 - 05/17/70
72-2	D-16250	C-13687	42	05/18/70 - 05/21/70
73-1	D-16347	C-13860	60	05/21/70 - 05/25/70
73-2	D-16580	C-14477	40	05/25/70 - 05/28/70
74-1	D-16579	C-14476	60	05/28/70 - 06/01/70
74-2	D-16549	C-14346	39	06/01/70 - 06/03/70
75-1	D-16313	C-17419	58	06/03/70 - 06/07/70
75-2	D-16310	C-17420	39	06/07/70 - 06/10/70
76-1	D-16548	C-14345	60	06/10/70 - 06/14/70
76-2	D-16545	C-14343	39	06/14/70 - 06/17/70
77-1	D-16546	C-14347	60	06/17/70 - 06/20/70
77-2	D-16550	C-17412	44	06/20/70 - 06/23/70
78-1	D-16578	C-14458	60	06/23/70 - 06/27/70
78-2	D-16576	C-14456	40	06/27/70 - 06/30/70
79-1	D-16577	C-14457	60	06/30/70 - 07/04/70
79-2	D-16575	C-14455	40	07/04/70 - 07/06/70
80-1	D-22443	C-17430	60	07/06/70 - 07/10/70
80-2	D-16537	C-14339	40	07/10/70 - 07/13/70
81-2	D-16535	C-14328	40	07/17/70 - 07/20/70
82-1	D-16409	C-13965	58	07/20/70 - 07/23/70
82-1	D-16410	C-15058	58	07/20/70 - 07/23/70
82-2	D-16408	C-15066	43	07/23/70 - 07/26/70
83-1	D-16406	C-13963	60	07/26/70 - 07/30/70
83-2	D-16405	C-13962	38	07/30/70 - 08/02/70
84-1	D-16397	C-13956	60	08/02/70 - 08/06/70
84-2	D-16396	C-13955	40	08/06/70 - 08/08/70
85-1	D-16395	C-13954	60	08/12/70 - 08/12/70
85-2	D-16399	C-13958	43	08/12/70 - 08/15/70
86-1	D-16398	C-13957	60	08/15/70 - 08/19/70
86-2	D-16404	C-13961	40	08/19/70 - 08/22/70
87-1	D-16403	C-14901	60	08/22/70 - 08/26/70
87-2	D-16402	C-14902	39	08/26/70 - 08/28/70
88-1	D-16401	C-13960	60	08/28/70 - 09/01/70
88-2	D-16400	C-13959	39	09/01/70 - 09/04/70
89-1	D-16225	C-13548	60	09/04/70 - 09/08/70
89-2	D-16224	C-13547	40	09/08/70 - 09/11/70
90-1	D-16386	C-17433	58	09/11/70 - 09/14/70
90-1	D-16223	C-13546	80	09/11/70 - 09/16/70
90-2	D-16363	C-17426	42	09/14/70 - 09/17/70
90-2	D-22448	C-17547	21	09/16/70 - 09/17/70

RUN#	D#	C#	FILES	TIME SPAN
91-1	D-16221	C-13475	80	09/17/70 - 09/23/70
91-2	D-16220	C-13474	21	09/23/70 - 09/24/70
92-1	D-16219	C-13473	80	09/24/70 - 09/29/70
92-2	D-16218	C-13472	20	09/29/70 - 09/30/70
93-1	D-16217	C-13471	80	10/01/70 - 10/06/70
93-2	D-16216	C-13470	21	10/05/70 - 10/07/70
94-1	D-22445	C-17435	45	10/11/70 - 10/14/70
94-2	D-22446	C-17446	58	10/07/70 - 10/11/70
95-1	D-12213	C-13469	80	10/14/70 - 10/19/70
95-2	D-16212	C-13468	22	10/19/70 - 10/20/70
96-2	D-16210	C-13467	19	10/26/70 - 10/27/70
97-1	D-16209	C-13466	80	10/27/70 - 11/01/70
97-2	D-16208	C-13465	20	11/01/70 - 11/03/70
98-1	D-16207	C-13464	80	11/03/70 - 11/08/70
98-2	D-16206	C-13463	20	11/08/70 - 11/09/70
99-1	D-16205	C-13462	80	11/09/70 - 11/15/70
99-2	D-16469	C-14075	12	11/15/70 - 11/16/70
100-1	D-16470	C-14076	58	11/16/70 - 11/20/70
100-2	D-16471	C-14077	44	11/20/70 - 11/22/70
101-1	D-16472	C-14078	58	11/22/70 - 11/26/70
101-2	D-16473	C-14079	45	11/26/70 - 11/29/70
102-1	D-16474	C-14149	58	11/29/70 - 12/03/70
102-2	D-16485	C-14160	43	12/03/70 - 12/06/70
103-1	D-16484	C-14159	58	12/06/70 - 12/09/70
103-2	D-16482	C-14157	44	12/10/70 - 12/12/70
104-1	D-16483	C-14158	58	12/12/70 - 12/16/70
104-2	D-16475	C-14150	40	12/16/70 - 12/19/70
105-1	D-16481	C-14156	58	12/19/70 - 12/23/70
105-2	D-16480	C-14155	44	12/23/70 - 12/26/70
106-1	D-16479	C-14154	58	12/26/70 - 12/29/70
106-2	D-16478	C-14153	42	12/29/70 - 01/01/71
107-1	D-16476	C-14151	58	01/01/71 - 01/05/71
107-2	D-16477	C-14152	44	01/05/71 - 01/08/71
108-1	D-16495	C-14168	58	01/08/71 - 01/12/71
108-2	D-16496	C-14282	41	01/12/71 - 01/14/71
109-1	D-16497	C-14283	58	01/14/71 - 01/18/71
109-2	D-16498	C-14284	43	01/18/71 - 01/21/71
110-1	D-16499	C-14285	58	01/21/71 - 01/25/71
110-2	D-16500	C-14286	42	01/25/71 - 01/28/71
111-1	D-16501	C-14287	58	01/28/71 - 01/31/71
111-2	D-16502	C-14288	43	02/01/71 - 02/03/71
112-1	D-16231	C-17421	58	02/03/71 - 02/07/71
112-2	D-16233	C-17422	42	02/07/71 - 02/10/71
113-1	D-16505	C-14289	58	02/10/71 - 02/14/71
113-2	D-16506	C-14290	41	02/14/71 - 02/16/71
114-1	D-16507	C-14291	58	02/17/71 - 02/20/71
114-2	D-16508	C-14292	42	02/20/71 - 02/23/71
115-1	D-16511	C-14295	58	02/23/71 - 02/27/71
115-2	D-16211	C-17403	44	02/27/71 - 03/02/71
116-1	D-16466	C-14072	58	03/01/71 - 03/06/71
116-2	D-16513	C-14296	41	03/06/71 - 03/08/71
117-1	D-16467	C-14073	58	03/08/71 - 03/12/71
117-2	D-16509	C-14293	43	03/12/71 - 03/15/71
118-1	D-16510	C-14294	58	03/15/71 - 03/19/71
118-2	D-16468	C-14074	43	03/19/71 - 03/22/71
119-1	D-16215	C-17404	58	03/22/71 - 03/26/71
119-2	D-16214	C-17405	39	03/26/71 - 03/28/71

RUN#	D#	C#	FILES	TIME SPAN
119-2	D-16264	C-13703	39	03/26/71 - 03/28/71
120-1	D-16265	C-13704	58	03/28/71 - 04/01/71
120-2	D-16266	C-13705	39	04/01/71 - 04/04/71
121-1	D-16267	C-13706	58	04/04/71 - 04/08/71
121-2	D-16268	C-13707	40	04/08/71 - 04/10/71
122-1	D-16269	C-13708	58	04/10/71 - 04/14/71
122-2	D-16270	C-13709	44	04/14/71 - 04/17/71
123-1	D-16271	C-13710	42	04/17/71 - 04/20/71
123-2	D-16273	C-13712	42	04/21/71 - 04/24/71
124-1	D-16272	C-13711	58	04/24/71 - 04/28/71
124-2	D-16226	C-13549	18	04/28/71 - 04/29/71
125-1	D-16227	C-13550	58	04/30/71 - 05/04/71
125-2	D-16228	C-13551	42	05/04/71 - 05/07/71
126-1	D-16259	C-17406	58	05/07/71 - 05/11/71
126-2	D-22449	C-17437	42	05/11/71 - 05/13/71
126-2	D-16230	C-13552	41	05/11/71 - 05/14/71
127-1	D-16231	C-13553	58	05/14/71 - 05/17/71
127-2	D-16232	C-13554	41	05/17/71 - 05/20/71
128-1	D-16281	C-17407	58	05/20/71 - 05/24/71
128-2	D-16263	C-17408	42	05/24/71 - 05/27/71
129-1	D-16522	C-14315	58	05/27/71 - 05/31/71
129-2	D-16521	C-14314	36	05/31/71 - 06/02/71
130-1	D-16520	C-14313	58	06/02/71 - 06/06/71
130-2	D-16519	C-14312	43	06/06/71 - 06/09/71
131-1	D-16518	C-14311	58	06/09/71 - 06/13/71
131-2	D-16517	C-14310	41	06/13/71 - 06/16/71
132-1	D-16515	C-14298	58	06/16/71 - 06/19/71
132-2	D-16516	C-14309	41	06/19/71 - 06/22/71
133-1	D-16431	C-17434	58	06/22/71 - 06/26/71
133-2	D-16514	C-14297	58	06/22/71 - 06/26/71
133-2	D-16420	C-17411	44	06/26/71 - 06/29/71
134-1	D-16551	C-14348	58	06/29/71 - 07/03/71
134-2	D-16555	C-14351	42	07/03/71 - 07/05/71
135-1	D-16554	C-14350	58	07/06/71 - 07/09/71
136-1	D-16553	C-14349	58	07/12/71 - 07/16/71
136-2	D-16558	C-14354	43	07/16/71 - 07/19/71
137-1	D-16557	C-14353	58	07/19/71 - 07/23/71
137-2	D-16556	C-14352	43	07/23/71 - 07/25/71
138-1	D-16462	C-14071	58	07/25/71 - 07/29/71
138-2	D-16460	C-14070	44	07/29/71 - 08/01/71
139-1	D-16561	C-14357	58	08/01/71 - 08/05/71
139-2	D-16560	C-14356	41	08/05/71 - 08/08/71
140-1	D-16559	C-14355	58	08/08/71 - 08/11/71
140-2	D-16524	C-14317	41	08/11/71 - 08/14/71
141-1	D-16523	C-14316	58	08/14/71 - 08/18/71
141-2	D-16380	C-13882	43	08/18/71 - 08/21/71
142-1	D-16379	C-13881	58	08/21/71 - 08/25/71
142-2	D-16378	C-13880	40	08/25/71 - 08/27/71
143-1	D-16377	C-13879	58	08/27/71 - 09/01/71
143-2	D-16376	C-13878	33	09/01/71 - 09/03/71
144-1	D-16375	C-13877	58	09/03/71 - 09/07/71
144-2	D-16374	C-13876	34	09/07/71 - 09/10/71
145-1	D-16373	C-13875	58	09/10/71 - 09/14/71
145-2	D-16372	C-13874	39	09/14/71 - 09/16/71

RUN#	D#	C#	FILES	TIME SPAN
146-1	D-16371	C-13873	58	09/16/71 - 09/20/71
146-2	D-16411	C-13966	43	09/20/71 - 09/23/71
147-1	D-16370	C-13872	58	09/23/71 - 09/27/71
147-2	D-16413	C-13968	43	09/27/71 - 09/29/71
148-1	D-16412	C-13967	58	09/30/71 - 10/03/71
148-2	D-16415	C-13970	37	10/04/71 - 10/06/71
149-1	D-16414	C-13969	58	10/06/71 - 10/10/71
149-2	D-16417	C-13972	43	10/10/71 - 10/10/71
150-1	D-16416	C-13971	58	10/13/71 - 10/16/71
150-2	D-16382	C-13882	40	10/17/71 - 10/19/71
151-1	D-16381	C-13883	58	10/19/71 - 10/23/71
151-2	D-16350	C-13863	39	10/23/71 - 10/26/71
152-1	D-16352	C-13865	58	10/26/71 - 10/30/71
152-2	D-16351	C-13864	37	10/30/71 - 11/02/71
153-1	D-16354	C-13867	58	11/02/71 - 11/05/71
153-2	D-16353	C-13866	41	11/05/71 - 11/08/71
154-1	D-16355	C-13868	58	11/08/71 - 11/12/71
154-2	D-16356	C-13869	42	11/12/71 - 11/15/71
155-1	D-16349	C-13862	58	11/15/71 - 11/19/71
155-2	D-16348	C-13861	36	11/19/71 - 11/21/71
156-1	D-16393	C-13894	58	11/21/71 - 11/25/71
156-2	D-16392	C-13893	39	11/25/71 - 11/28/71
157-1	D-16391	C-13892	58	11/28/71 - 12/02/71
157-2	D-16390	C-13891	40	12/02/71 - 12/05/71
158-1	D-16383	C-13885	58	12/05/71 - 12/09/71
158-2	D-16385	C-13887	42	12/09/71 - 12/11/71
159-1	D-16384	C-13886	58	12/11/71 - 12/15/71
159-2	D-16387	C-13888	37	12/15/71 - 12/18/71
160-1	D-16536	C-17424	58	12/18/71 - 12/21/71
160-2	D-16542	C-17423	28	12/23/71 - 12/24/71
160-2	D-16389	C-13890	28	12/23/71 - 12/24/71
161-1	D-16388	C-13889	58	12/25/71 - 12/29/71
161-2	D-16357	C-13870	34	12/29/71 - 12/29/71
162-1	D-16358	C-13871	58	12/31/71 - 01/04/72
162-1	D-16569	C-14450	58	12/31/71 - 01/04/72
162-2	D-16570	C-14451	43	01/04/72 - 01/07/72
163-1	D-16567	C-14448	58	01/07/72 - 01/11/72
163-2	D-16568	C-14449	40	01/11/72 - 01/13/72
164-1	D-16565	C-14446	58	01/13/72 - 01/17/72
164-2	D-16566	C-14447	38	01/17/72 - 01/20/72
165-1	D-16562	C-14443	58	01/20/72 - 01/24/72
165-2	D-16563	C-14444	40	01/24/72 - 01/27/72
166-1	D-16564	C-14445	58	01/27/72 - 01/31/72
166-2	D-16571	C-14452	32	01/31/72 - 02/02/72
167-1	D-16572	C-14453	58	02/03/72 - 02/08/72
167-2	D-16573	C-14454	4	02/08/72 - 02/09/72
179-1	D-16538	C-14340	25	04/26/72 - 04/29/72
180-1	D-16539	C-14341	21	04/30/72 - 05/06/72
181-1	D-16540	C-14342	21	05/06/72 - 05/12/72
182-1	D-16541	C-15061	27	05/13/72 - 05/19/72
183-1	D-16453	C-17543	27	05/20/72 - 05/26/72
184-1	D-16543	C-15065	24	05/26/72 - 06/01/72
185-1	D-16300	C-17409	57	05/31/72 - 06/07/72

RUN#	D#	C#	FILES	TIME SPAN
185-1	D-16332	C-14914	57	06/01/72 - 06/08/72
186-1	D-16331	C-14913	58	06/08/72 - 06/12/72
186-1	D-16330	C-14912	58	06/08/72 - 06/12/72
186-2	D-16329	C-14911	34	06/12/72 - 06/14/72
187-1	D-16328	C-14910	58	06/15/72 - 06/19/72
187-2	D-16327	C-14982	31	06/19/72 - 06/19/72
188-1	D-16326	C-14983	58	06/21/72 - 06/25/72
189-1	D-16325	C-14909	58	06/28/72 - 07/04/72
189-2	D-16324	C-15054	1	07/04/72 - 07/04/72
190-1	D-16323	C-14990	51	07/05/72 - 07/11/72
191-1	D-16322	C-14908	47	07/11/72 - 07/17/72
192-1	D-16504	C-17428	22	07/17/72 - 07/23/72
193-1	D-16368	C-14989	23	07/25/72 - 07/30/72
194-1	D-16367	C-14987	23	07/31/72 - 08/06/72
195-2	D-16503	C-17542	29	08/10/72 - 08/13/72
196-1	D-16360	C-14916	17	08/14/72 - 08/19/72
197-1	D-16359	C-14915	23	08/20/72 - 08/26/72
198-1	D-16363	C-14918	25	08/27/72 - 09/01/72
199-1	D-16362	C-14917	20	09/02/72 - 09/07/72
200-1	D-16365	C-14919	7	09/09/72 - 09/14/72
201-1	D-16364	C-14986	15	09/15/72 - 09/21/72
202-1	D-16421	C-14985	16	09/22/72 - 09/28/72
203-1	D-16422	C-14981	17	09/29/72 - 10/05/72
204-1	D-16512	C-17425	24	10/05/72 - 10/10/72
205-1	D-16419	C-14991	18	10/12/72 - 10/17/72
206-1	D-16418	C-15051	18	10/18/72 - 10/24/72
207-1	D-16424	C-15052	58	10/25/72 - 10/30/72
207-2	D-16423	C-14984	10	10/30/72 - 10/31/72
208-1	D-16465	C-15068	58	10/31/72 - 11/05/72
208-2	D-16464	C-15062	17	11/05/72 - 11/06/72
209-1	D-16463	C-15063	23	11/07/72 - 11/13/72
215-1	D-16461	C-15056	20	12/18/72 - 12/23/72
216-1	D-16458	C-14988	20	12/24/72 - 12/29/72
217-1	D-16459	C-15060	10	12/31/72 - 01/04/73
218-1	D-16456	C-15053	1	01/04/73 - 01/04/73
219-1	D-16457	C-15055	1	01/12/73 - 01/12/73

B22587

DESCRIPTION AND CALIBRATION DATA

OF GSFC EXPERIMENT ON OSO-5

BACKGROUND

OSO-5 was launched on January 22, 1969 into a near circular orbit with an apogee of 560 km, perigee of 535 km, inclination of 33°, and a period of 96 min.

The X-ray spectrometers and ion chambers were mounted in the oriented sail. The pointing accuracy was about ± 5 arc sec. Useful data was taken while the instruments were pointed toward the center of the sun. Data was also recorded when the instruments were pointed in a raster scan of 40 by 40 arc min. centered on the sun; although results may be obtained from the raster data, they are not discussed further in this report since reduction techniques are rather complex.

Dense emission line spectra down to a wavelength of 1.5Å has been recorded during observations of solar radiation. A comparison of the quiet and active sun with the sun during flare conditions indicate many dramatic changes in line intensity and wavelength emissions. The GSFC experiment, mounted in the pointed section of the OSO-5 satellite, was designed to observe the whole sun and record the spectral and time resolved radiation between 1Å and 400Å for a variety of conditions. The instruments consist of 3 single Bragg spectrometers, to be used in the range 1Å - 25Å, a grazing incidence spectrometer to record data between 25Å and 400Å, and a pair of ion chambers to measure the integrated flux between 0.5Å and 8Å. Figure 1 is a schematic drawing of the crystal spectrometers and the grating spectrometer.

INSTRUMENTAL DESCRIPTION

Double spectrometer - to observe radiation between 1Å and 10Å.

Two single crystal spectrometers, each consisting of a crystal and

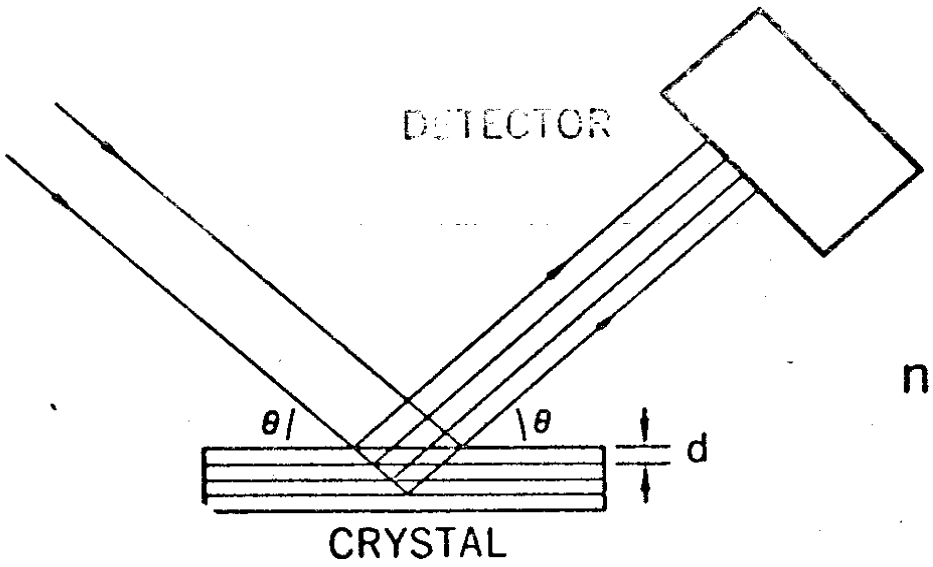

$$n\lambda = 2d \sin \theta$$

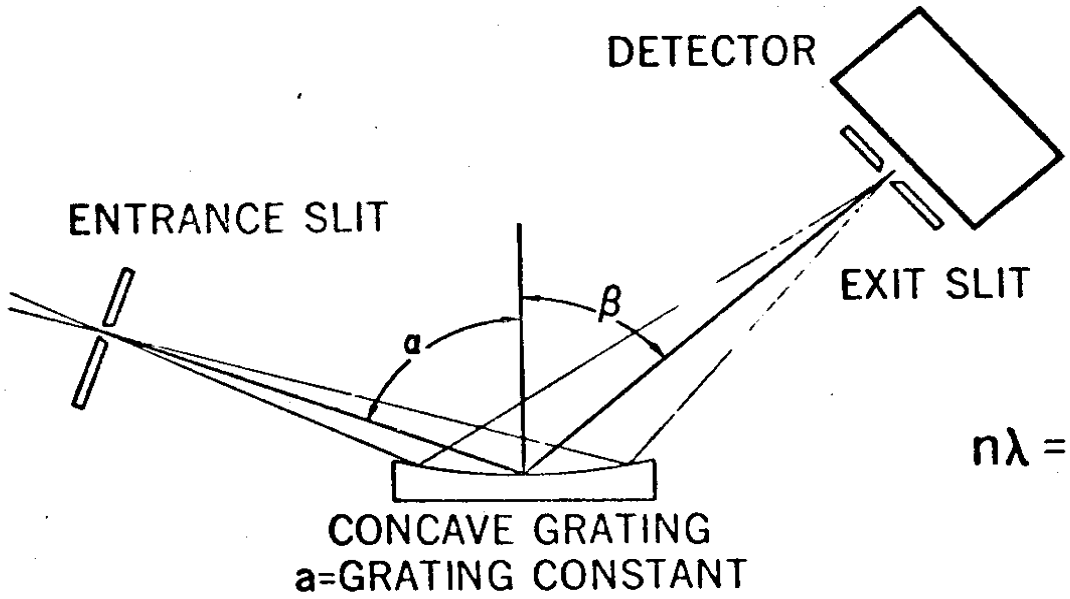

$$n\lambda = a\,(\sin \alpha - \sin \beta)$$

FIGURE 1

detector constructed in the θ and 2θ goniometer configuration (See Figure 1) are mounted on the same stepping mechanism, one above the other (hence the name Double Spectrometer). Each independently records data in its wavelength range. The two spectrometer mechanism scans the spectrum in 514 steps by stepping the crystals .0708° per step from 12° to 45° and the detectors by .1416° per step. Data is recorded at each step for .27 seconds and is readout every .32 seconds. The difference of .05 sec in time is used for the readout and, if necessary, to move the spectrometer to the next position (See Timing Diagram, Appendix 1).

The shorter wavelength spectrometer of the two, observing radiation in the range between 1Å and 3Å has a Li F crystal to diffract X-rays and a Xenon filled proportional counter with a .002" Beryllium entrance window to measure the radiation. The Li F crystal has a 2d spacing of 4.027Å and a rocking curve of FWHM = 16 arc minutes (the rocking curve give the diffraction pattern of a monchromatic incident beam). The longer wavelengths, 3Å to 10Å, are recorded with an ADP crystal and a proportional counter made with a .002" Beryllium entrance window and filled with a 90% Kr, 10% methane mixture. The ADP crystal has a 2d spacing of 10.64Å and a rocking curve of FWHM = 4.3 arc minutes. Three operational modes are available to move the double spectrometer at various speeds.

Mode 1 consists of a scan in 2.73 minutes and a re-trace in the same time, where the speed is one step every 0.32 seconds, sub-frame division Ratio: 1:1. (1 readout per step position)

Mode 2 consists of a scan in 16.38 minutes and a re-trace in the same time, where the speed is one step every 1.920 seconds. Sub-frame division ratio: 6:1 (6 readouts per step position).

Mode 3 consists of a scan in 32.76 minutes and a re-trace in the same time, where the speed is one step every 3.84 seconds. Sub-frame division ratio: 12:1 (12 readouts per step position).

Single crystal spectrometer to observe radiation between 6Å and 25Å.

This crystal spectrometer consists of a KAP crystal with an open photomultiplier (Bendix M312 with a CsI coated nickel cathode that are shielded from long wavelengths by two filters of 1μ polypropolene coated with 1500Å of Al) mounted in the θ and 2θ configuration on a stepping motor gear arrangement. The KAP crystal, 2d spacing 26.64Å and a rocking curve that increases from about FWHM = 1 arc minutes at 6Å to 2-4 arc minutes at 20Å, scans the spectrum between 5.6Å and 25.3Å in stepping increments of .0555° (3.33 arc minutes) over the range of angles between 12° and 72°. The total number of steps per scan is 1051 steps. Data is recorded for .30 seconds and readout in 0.02 seconds when the spectrometer may be stepped to the next position. Data is readout every 0.32 seconds. The two operational modes available for scanning are:

Mode 1 consists of a trace in 5.46 minutes and a re-trace in the same time, where the speed is one step every 0.32 second. Sub-frame division ratio: 1:1. (1 readout per step position).

Mode 2 consists of a scan in 21.84 minutes and a re-trace in the same time, where the speed is one step every 1.28 seconds. Sub-frame division ratio: 4:1. (4 readouts per step position).

The total number of steps is approximately 105.

Grating Spectrometer to observe radiation between 25Å and 400Å.

The spectrometer consists essentially of an entrance slit of width 22.5 microns and height of 2.0 cm mounted on the Rowland circle to accept radiation incident on the grating at an incident angle of 88°. The grating is an original gold master manufactured by Bausch and Lomb, with 576 lines per millimeter ruled on a spherical blank of one meter radius of curvature. The detection mechanism consists of an exit slit of width 22 microns and height of 2.0 cm which allows diffracted radiation to enter a Bendix open window magnetic photomultiplier (MEM); this detector arrangement is moved in discrete steps along the Rowland circle by means of a stepping motor. The spectral resolution of the instrument is governed by the length of a step, and is 0.11Å at 120Å. At each step the detector registers counts during an interval of 0.30 seconds and is readout in the next 0.02 sec. The detector may be moved to the next position during readout. The normal time required for one complete scan of the spectrum from 25Å to 400Å is 15 minutes. A slower scan time of 30 minutes is obtained by recording the signal twice at the same step; this slower mode of operation gives improved statistics and allows line wavelengths to be more accurately determined. The over-all acceptance angle of the spectrometer is 1.5°, so that the entire solar disc and part of the corona are viewed.

The grating spectrometer is programmed as follows: 25-400 Angstroms range, three modes of operation.

Mode 1 consists of forward travel from 400 to 25 A at one step per 0.1 second, except for the travel of the six segment areas consisting of

approximately 64 steps each where the speed is one step per 0.32 second. The re-trace in this mode consists of a fast scan that is 0.01 second per step. In this mode, the instrument reverses travel and returns to the long wavelength end immediately after scanning the sixth segment.

Mode 2 - normal scan rate consists of a trace and re-trace, each having a period of approximately 15 minutes, where the speed will be one step every 0.32 second.

Mode 3 consists of a slow scan from 25 to 400 A at one step per 0.64 second (2 readouts at same position) for a period of 30 minutes, and a re-trace at one step per 0.01 second, except for the travel of six segment areas consisting of 64 steps each where the speed will be one step per 0.32 second as in Mode 1.

Data readout is inhibited whenever the instrument is traveling at the fast scan rate (0.01 seconds per step) in the forward (400-25A) direction. Data readout is not inhibited when the instrument is traveling in the reverse direction regardless of its speed.

Total number of steps for the grating spectrometer in Mode 2 is 2860.

Stationary Mode. To study rapid time variations of spectral lines, each of the above spectrometers may be set to remain at some preselected step. Readout occurs every 0.32 sec. and data accumulation times per readout for each instrument are the same as those given above.

Preselection of a step for a particular spectral line was relatively simple for the grating spectrometer since there was relatively little change in the step location of lines with position on the solar disk.

However, with the crystal spectrometers, preselection required compensation for the location of sources on the solar disk. Spectral studies, the identification of strong lines, and their relative variations with time and location on the solar disk assisted in making the necessary adjustments.

Readout Overflow. The grating spectrometer readout had a large enough capacity that overflow was not expected and did not occur. If the counts for the crystal spectrometers during a single accumulation time were less than 256, readout occurred every 0.32 sec. However, if the counts exceeded 256, readout required two main frames of 0.32 sec. No data was accumulated during the second main frame. The spectrometers stepping was according to command so that there are times when counts for a particular step would be missing. The data format is given in the Data Section.

Ion chambers - to monitor 0.5Å - 8Å solar flux. Two ion chambers, each using a .005" Beryllium entrance window and filled with Xenon gas at atmospheric pressure, provide a spectrally selective detector with a narrow band pass (0.5Å - 8Å) to measure solar flux. The window provides the low energy cutoff by absorption of radiation at longer wavelengths (8Å) and the photo absorption characteristics of the gas over a path length of 2.5 cm determine the higher energy (short λ) detection limit. The ion chamber consists of a shell which has been plated and a center wire acting as a positive collector. The effective area of the Be entrance window is 0.995 cm^2. The outputs of the chambers are connected and fed into an electrometer. The digitized electrometer output is readout every 0.32 seconds. (See White, 1964, Young and Stober, 1966) The second reference has an efficiency curve for a similar ion chamber.

CALIBRATION

Short wavelength double spectrometer (Li F crystal) 1Å - 3Å. A Henke type X-ray source with changeable targets was used to generate various monochromatic beams collimated by a mechanical collimator to 10 arc minutes. The beam flux was measured by a flow proportional counter at each particular wavelength. The spectrometer was inserted in the beam to measure the integrated flux across the line with variation in the Bragg angle. The readout was recorded in counts/.30 seconds at each stepping position. Efficiency results are shown in Figure 2.

To evaluate the effects of absorption edges of the counter gas, an approximate theoretical efficiency was calculated using the spectrometer geometry, theoretical integrated reflection coefficients, and window and gas absorption coefficients (Saba, 1972). Results are shown in Figure 2. Theoretical results adjusted to measured efficiencies are also shown. Differences between theoretical and measured values are probably attributable to the theoretical absorption and reflection coefficients. See Appendix 4 for use of efficiencies.

Long wavelength double spectrometer (ADP crystal) 3Å - 10Å. Using the Henke tube with 10 minute collimator, the efficiency of the ADP crystal spectrometer was measured at the Zr Lα line (6.07Å) and Mo Lα line (5.41Å). However, since the two wavelengths are close, only a general statement can be made. Another factor to consider is the L absorption edges of the Argon gas in the detector at 6.47Å, 7.17Å, 739Å. (A theoretical curve should be generated and a best fit made to the 6.07Å and 5.41Å experimental measurements). The measured efficiency at 6.07Å is 9.34×10^{-5} and at 5.41Å is 9.08×10^{-5} $\frac{C}{\text{photon}}$. Rad cm^2.

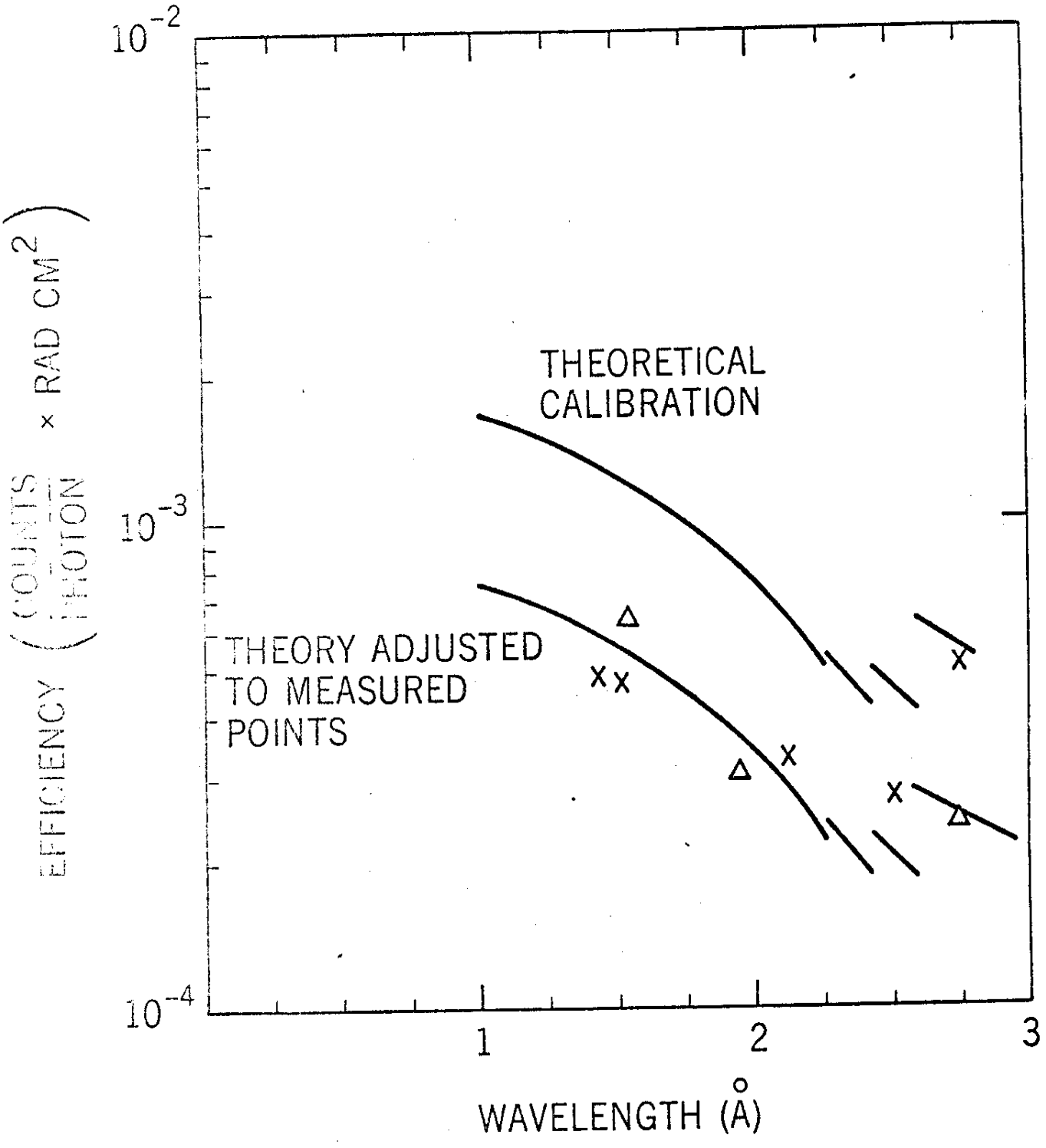

Figure 2. Efficiency of the Li F Spectrometer. Upper curve is a theoretical calibration. Lower curve is the theoretical calibration adjusted to measured points. X-measurements by Sterk. Δ-measurements by Neupert and Swartz.

Single crystal spectrometer (KAP crystal) 6-25Å. Sensitivity of the instrument was measured using the characteristic K emission line of Al and the characteristic L emission lines of Ni and Co. In order to obtain a calibration over the complete range of wavelengths, the relative sensitivity was calculated using the integrated reflection coefficient reported by Evans and Pounds (1968), and assuming a constant photoelectric yield for the CsI surface over the spectral range. The sensitivity so calculated was adjusted to obtain a best fit at those wavelengths at which the sensitivity was measured. Using this calibration, the absolute intensity for each emission line is given by:

$$I(\lambda) = \frac{N(\lambda)\omega \quad hc}{A(\lambda)\ R(\lambda)\ E(\lambda)\ \lambda} \text{ (erg cm}^{-2}\text{ s}^{-1}\text{)},$$

where $N(\lambda)$ is the total number of counts obtained while scanning through the emission feature at wavelength λ, ω is the scanning rate in radians per second, $A(\lambda)$ is the effective area of the spectrometer, $R(\lambda)$ the integrated reflection coefficient and $E(\lambda)$ the efficiency of the detector including transmission of the EUV-suppressing filters. Our resulting values

TABLE 1.

INSTRUMENTAL EFFICIENCY $\lambda A(\lambda)R(\lambda)E(\lambda)/\omega he$ OF THE OSO-5 KAP CRYSTAL SPECTROMETER, IN UNITS OF COUNTS $ERG^{-1}\ CM^2S^1$

λ(Å)	Efficiency	λ(Å)	Efficiency
6	8.13×10^5	14	14.1×10^5
8	12.3×10^5	16	10.3×10^5
10	15.2×10^5	18	6.80×10^5
12	16.1×10^5	20	4.13×10^5
		22	2.58×10^5

for the over-all instrumental efficiency are given in Table 1 for Mode 1. A check on the relative sensitivity was obtained by comparing the ratio of intensities of the O VII and Ne IX lines in the non-flare spectrum against the similar ratio derived from the data of Evans and Pounds (1968) for a period of low solar activity and from the data of Walker and Rugge (1969).

Grating spectrometer 25Å-400Å . The components for which we can measure photon efficiency vs. wavelengths that affect the overall efficiency of the spectrometer are the grating and photomultiplier. It is useful to have their efficiency for absolute calculations of energy from the output data (counts/sec). Table 2 gives results for grating efficiency and Table 3 is a listing of the photomultiplier efficiency from Sampson's data. Sampson's measurements were made using a calibrated vacuum ultraviolet source.

The data for a second type of calibration were taken by the grating spectrometer on board the Orbiting Solar Observatory between January 30, 1969 through March 1, 1969. The solar flux, measured by the grating spectrometer, consists of 120 scans of the solar radiation between 25Å - 400Å and were a good example of a non-flaring sun output in this energy band. These scans were averaged together. The peak intensities were then recorded for only the strongest lines with no observed enhancement from nearby lines. A report published by Chapman and Neupert developed a means of correlating the intensities of certain strong EUV lines with the Ottawa 2800 MH flux recorded at the time the EUV spectrometer scanned the sun. An average 2800 MH flux was calculated for the 120 scans and applied to Chapmans and

TABLE 2

GRATING REFLECTIVITY

λ	$I_1/I_{original}$ (First order efficiency (%))
247Å	3.4
267	3.0
303	2.9
323	3.3
345	2.8
387	2.8
419	2.0
452	1.7

TABLE 3

ABSOLUTE EFFICIENCY OF A MEM WITH PT CATHODE

AS A FUNCTION OF WAVELENGTH

	% eff. PT cathode MEM
186Å	1.71%
209Å	1.79%
225Å	2.21%
247Å	2.31%
266Å	2.73%
283.5Å	3.00%
303Å	3.29%
323Å	3.51%
345Å	4.19%

Neupert formulas. The results gave intensities (ergs/cm^{2}sec) for each line. Peak counts (counts/0.30 sec) for the same lines were divided by corresponding intensities to give efficiencies, E_{mf}. These are listed in Table 4.

TABLE 4

	(E(counts/0.30 sec)(erg^{-1}cm^{2}sec)	
λ	E_{mf}	E_ℓ
171A	70 x 10^3	89 x 10^3
174.5	72 x 10^3	90 x 10^3
195.1	102 x 10^3	102 x 10^3
256.3	153 x 10^3	152 x 10^3
284.2	127 x 10^3	185 x 10^3
303.8	122 x 10^3	214 x 10^3
335.4	91 x 10^3	286 x 10^3

comparison, E_ℓ, efficiencies evaluated from spectrometer geometry measured grating and photomultiplier efficiencies are also shown in le 4. Differences are probably due to changes in photomultiplier iciencies during flight.

Ion chambers - 0.5 - 8Å integrated flux. An X-ray photon entering an ion chamber will loose an average of 22 eV per ion pair formed until its total energy is absorbed. This corresponds to 2.8 x 10^{10} ion pairs/erg. If the temperature of the corona is about 2.8 x 10^6K, the energy output is expected to be approximately 3.6 x 10^{-4} ergs/cm^2 sec^{-1} at 1 AU in the 2 to 8Å range. ([(2.8)(3.6)(10^6) ion pairs/cm^2 sec^{-1}] = 10 x 10^6 ion pairs/cm^2 sec = 1 x 10^7 x 1.6 x 10^{-19} = 1.6 x 10^{-12} amperes/cm^2). Since

2 ion chambers are used (twice the area available to receive photons) the current expected is 3.2×10^{-12} amperes. Because more or less solar activity and different solar conditions can vary the energy output, it is desirable to measure ion chamber currents over a large range. Four ranges were chosen and designated as A-Range=10^{-13} amps, B-Range=10^{-12} amps, C-Range

TABLE 5

RANGE	A	B	C	D
COUNTS	ergs cm^{-2} sec^{-1}	ergs cm^{-2} sec^{-1}	ergs cm^{-2} sec^{-1}	ergs cm^{-2} sec^{-1}
10	.098	1.10	17.06	158.47
25	.54	5.49	57.29	572.93
50	1.26	13.04	125.56	1267.76
75	1.99	20.48	193.82	1962.59
100	2.71	27.92	262.09	2633.04
125	3.43	35.35	329.13	3303.49
150	4.15	42.67	396.18	3973.94
175	4.85	50.10	463.22	4656.58
200	5.57	57.42	531.48	5320.94
225	6.29	64.73	597.31	5997.48
250	6.99	71.92	665.57	6655.74

[illegible] amps and D-Range = 10^{-10} amps. A high impedence electrometer senses the current and an analog-to-digital converter changes the current reading to a binary readout 0 to 256 counts, in a particular range. The output of a count rate meter was used to select the range. A calibration table has been prepared listing the range, counts, and the energy as a function of counts in each range. Both the range and counts are readout every 0.32 sec.

Time variation in the calibration. The grating spectrometer detector began loosing sensitivity after 2 months of operation in the satellite. A high count burst in the data preceded the degradation which lasted for 2 weeks after which the data was not usable. The grating spectrometer efficiency can be monitored by observing the 304Å line at various times.

The proportional counters in the crystal spectrometer (1-3Å and 3-10Å) were good for approximately 1 year. See Appendix 3 for count rate effects for the 3-10Å spectrometer. The flux measured by the ion chambers can be compared on a time-history basis to the output data of particular lines to get a relative efficiency. For over 1 year, the ion chamber showed no signs of deterioration.

The 6-25Å crystal spectrometer began loosing sensitivity after 6 months of operation. An approximate relative sensitivity can be calculated by comparing intensity of quiet sun lines (OV as an example) as a function of time at the same flux readings from the ion chambers.

Background. The background levels were usually very small compared to useful signals. Most of this small background was due to cosmic rays and varied with geomagnetic latitudes. During occasional spacecraft traversals of the radiation belt, background levels may be very large. Spectral scans and comparisons of variations in ion chamber currents and line radiation are useful in determining background levels. The examination of counts during prior and subsequent orbits are useful indicators of radiation belt passage since these occur about an orbital period apart. The non-occurrence of events on the sun (Solar Geophysical Data) with temporal variations in ion chamber currents or counting rates is usually an indication of radiation belt traversal.

Radiation belt traversals may also be determined from their location and the location of the spacecraft (data available but not given here). However, this procedure is more complex and no better than the use of the above background indicators.

REFERENCES

Chapman, R. D. and Neupert, W. M.: 1964, J. Geophys. Res., 78.

Evans, K. and Pound, K. A.: 1968, Astrophys. J., 152, 314.

Kiba, J. L.: 1972, Thesis, Department of Physics and Astronomy, Univ. of Maryland.

Sampson, J. A. R.: 1974, private communication.

Walker, A. B. C. and Rugge, H. R.: 1969 in C. de Jager and Z. Svestka (eds.) Solar Flares and Space Research, COSPAR Symp., 102.

White, W. A.: 1964, Space Research IV, 771.

Young, R. M. and Stober, A. K.: 1966, NASA Technical Note, NASA TN D-3169.

BIBLIOGRAPHY

Kastner, S. O., Neupert, W. M., and Swartz, M.: 1964, to be published in Astrophys. J.

Neupert, W. M. and Swartz, M.: 1970, Astrophys. J., 160, L189.

Neupert, W. M., Swartz, M., and Kastner, S. O.: 1973, Solar Phys., 31, 171.

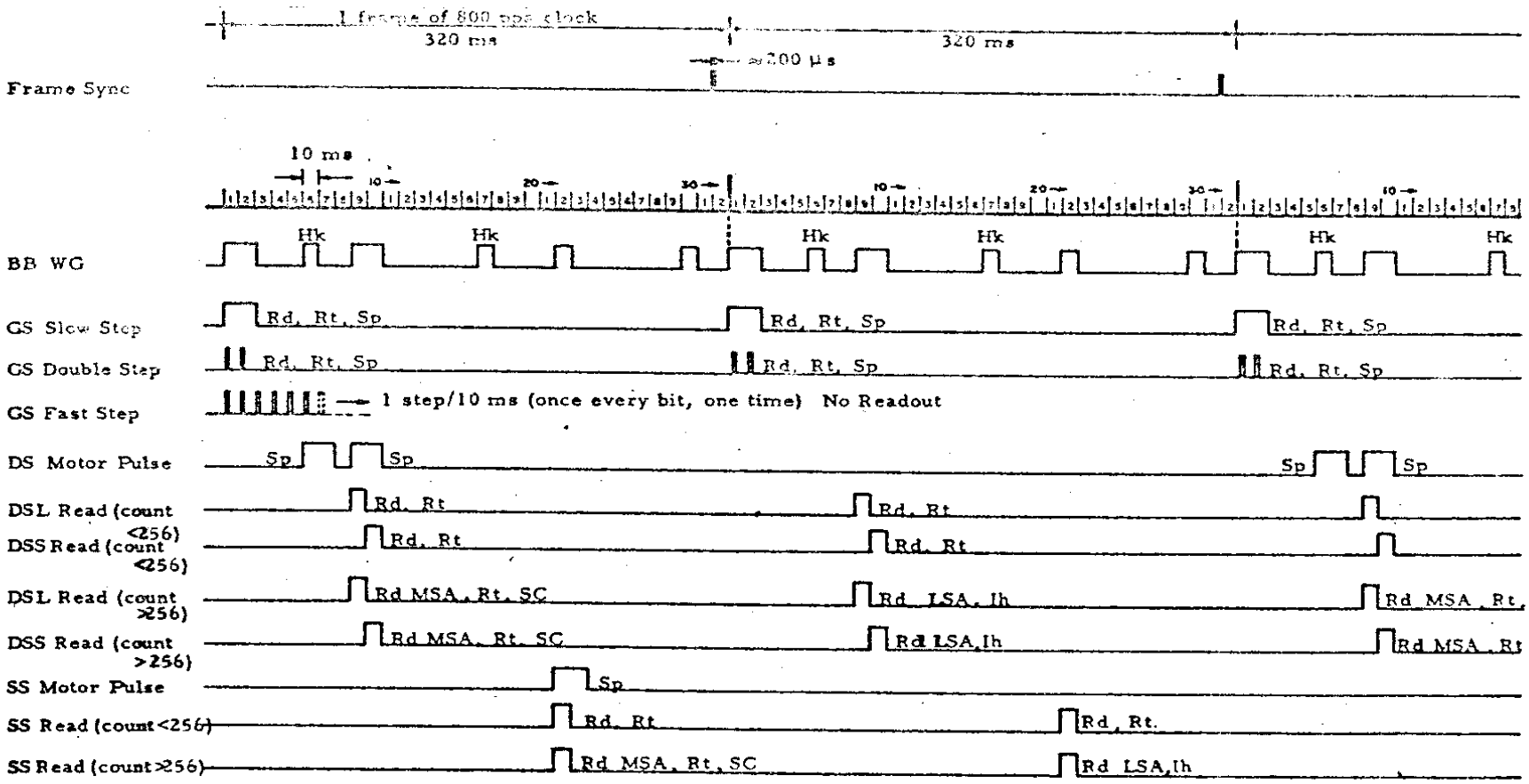

TIMING SEQUENCE

Key

Hk	-	Housekeeping	**MSA**	-	Most significant accumulator	**SS**	-	Single Spectrometer
Ih	-	Inhibit	**LSA**	-	Least significant accumulator	**DS**	-	Double Spectrometer
Rd	-	Read	**SC**	-	Start Count	**DSS**	-	Double Spectrometer Short wavelength
Rt	-	Reset	**GS**	-	Grating Spectrometer	**DSL**	-	Double Spectrometer Long wavelength
Sp	-	Step						

APPENDIX 2

RASTER DATA

In the raster mode of operation, the instruments scan the sun every 307.2 sec. with a 40 line raster pattern of approximately 40 x 40 arc min. centered on the sun; each line sweep begins every 24 telemetry main frames (0.32 sec.).

The ion chamber views a sufficiently large solid angle that its data is unaffected by the rastering.

The crystal spectrometers require wavelength compensation for rastering motion.

The raster action also produced a scanning of the solar illumination across the face of the grating. As the reflectivity of the grating was not uniform (some prelaunch data is available) the raster action results in a small (25%) modulation of the output of the instrument. In particular, the rapid return sweep from the end of the raster to the beginning of a new raster may produce an abrupt change in the output of the detector.

Line sweep is perpendicular to the spin axis of the satellite. The direction of the spin axis relative to solar north may be derived from the spin axis direction in the correlated data tapes and the angle between solar north and polar north as viewed from the satellite.

APPENDIX 3

HIGH COUNT RATE EFFECTS FOR THE 3-10Å SPECTROMETER

Even for relatively moderate counting rates of about 300 counts per 0.32 sec, the 3-10Å spectrometer gave indications of changes in counter sensitivity above about 4Å.

Although details are not fully understood, the explanation appears to be due to a decrease in the proportional counter gain with counting rate. The output pulses were amplified and passed through a discriminator window before being counted. The upper discriminator was set slightly above 3A photon pulses and the lower discriminator slightly below 10A photon pulses.

As counting rates increased and counter gains decreased, increasing fractions of pulses from photons below 10Å were unable to pass the lower discriminator.

Strong lines (near 1.87Å in 2nd, 3rd, and 4th order) are eliminated by the upper discriminator at moderate counting rates. These lines, however, appear at high counting rates, due to loss in gain of the counters. (See Neupert and Swartz).

Corrections for changes in detector sensitivity with counting rate are not available.

APPENDIX 4

EFFICIENCIES FOR CRYSTAL SPECTROMETERS

Emission line or group of lines: In the calibrations of crystal spectrometers, the efficiencies, E_f, are given by:

$$E_f = \frac{N(\lambda)\omega}{\Phi} \frac{(\text{counts x rad/sec})}{(\text{photons/cm}^2\text{sec})}$$

where $N(\lambda)$ is the total counts associated with a line at λ, ω is the scan rate, and Φ is the incident line flux. This same formula may be used to obtain Φ for emission features from spectral scans. $(hc/\lambda)\Phi$ then gives ergs/cm^2 sec associated with the emission line or group of lines (See page 9).

Continuum: In the evaluation of E_f, it may be noted that

$$N(\lambda)\omega \equiv \int C_\theta d\theta$$

$$\Phi \equiv \int \frac{d\Phi}{d\lambda} d\lambda$$

where θ is the Bragg angle and C_θ is the counting rate (counts/sec). The limits of integration are sufficient to include all fluxes and C_θ associated with the calibration line.

In a continuum, C_θ and $\frac{d\Phi}{d\lambda}$ may be expected to vary slowly. Thus approximately

$$\frac{d\Phi}{d\lambda} = \frac{C_\theta}{E_f} \times \frac{d\theta}{d\lambda}$$

where $\frac{d\theta}{d\lambda} = \frac{n}{2d \cos \theta}$ is given by the Bragg formula.

Similarly, differential fluxes per unit energy may be derived.

OPERATIONS

ation

From launch until about Jan. 28, 1969, 1300 U.T., no useful data was collected because of spacecraft checkout.

From then until about Feb. 18, 1969, spectral scans were emphasized.

Thereafter, line monitoring was emphasized with spectral scans taken about once a week.

Listed below are the commands that were used. Following this in chronological order are the commands that were issued.

Following this is a list of times of activity during which significant changes in real ion chamber current occurred and the spacecraft was in the point mode. This list is thought to be complete but may not be.

Commands

GSFC Command 1 - Command 306: This command actuates Mode 1 of the grating spectrometer.

GSFC Command 2 - Command 307: This command actuates Mode 2 of the grating spectrometer.

GSFC Command 3 - Command 308: This command actuates Mode 3 of the grating spectrometer.

GSFC Command 4 - Command 309: This command returns the grating spectrometer to its long wavelength limit from whatever position the spectrometer may be in by the shortest possible route (0.01 second per step reverse). Upon reaching the home position, the spectrometer stops and awaits the next ground command.

GSFC Command 5 - Command 310: This command returns the grating spectrometer to its short wavelength limit from whatever position the spectrometer may be in by the shortest possible route (0.01 second per

step forward). Upon reaching the home position, the spectrometer stops and awaits the next ground command.

GSFC Command 6 - Command 311: This command stops the grating spectrometer immediately upon receipt in whatever position it may be.

Except for those commands which imply specific direction such as GSFC Commands 4, 5, 20, and 21, the grating spectrometer will operate in the following manner upon receipt of a command. While traveling in any mode, the grating spectrometer will immediately act on the new command but will continue traveling in the same direction as it was before the command was transmitted.

When it is desired to set the grating spectrometer on a given spectral line, the procedure is to transmit a command 4, then allow sufficient time for a complete re-trace of the spectrometer in the fastest mode (61.44 seconds). After this period has elapsed, a command 5 is transmitted synchronously with the start of a clock; this starts the spectrometer forward. Having calculated the necessary time lapse to complete the number of steps required to reach the desired line, command 6 is transmitted at the expiration of this time and the spectrometer will stop on the line position.

GSFC Command 7 - Command 312: This command actuates Mode 1 of the double spectrometer.

GSFC Command 8 - Command 313: This command actuates Mode 2 of the double spectrometer.

GSFC Command 9 - Command 314: This command actuates Mode 3 of the double spectrometer.

GSFC Command 10 - Command 329: This command actuates Mode 1 of the single spectrometer.

GSFC Command 11 - Command 330: This command actuates Mode 2 of the single spectrometer.

GSFC Command 12 - Command 331: This command is Flare Ready, Modes "OFF". This command effectively cancels GSFC Commands 13, 14, and 15. While this command is stored, the spectrometers will not respond to a flare indication from the ion chamber electronics.

GSFC Command 13 - Command 333: This command is Flare Ready, Mode "ON", for the grating spectrometer. This command is stored by the command memory. Upon receipt of a flare signal from the ion chamber electronics, it automatically puts the grating spectrometer into Mode 1.

GSFC Command 14 - Command 334: This command is Flare Ready, Mode "ON", for the double spectrometer. This command is stored by the command memory. Upon receipt of a flare signal from the ion chamber electronics, it automatically puts the double spectrometer into Mode 1.

GSFC Command 15 - Command 337: This command is Flare Ready, Mode "ON", for the single spectrometer. This command is stored by the command memory. Upon receipt of a flare signal from the ion chamber electronics, it automatically puts the single spectrometer into Mode 1.

Note - The purpose of Commands 13 through 15 is to modify the ground commands stored in the command memory automatically in quick response to a solar flare. Command 12 inhibits this operation.

GSFC Command 16 - Command 338: This command stops the single spectrometer upon receipt in whatever position the spectrometer may be.

GSFC Command 17 - Command 339: This command stops the double spectrometer immediately upon receipt in whatever position the spectrometer may be.

GSFC Command 18 - Command 340: This command operates on all three spectrometers. It commands the grating spectrometer to Mode 3, the double spectrometer to Mode 3, and the single spectrometer to Mode 2.

GSFC Command 19 - Command 341: This command fires and thus releases the squib-actuated pins restraining the double, grating, and single spectrometers during the launch phase. It is redundant with Command 27.

GSFC Command 20 - Command 342: This command increments the grating spectrometer forward one step.

GSFC Command 21 - Command 343: This command increments the grating spectrometer reverse one step.

Note - The last two commands listed are provided for fine positioning of the grating spectrometer, under control of the ground computer, prior to operation in the sun scan mode. These two commands in conjunction with the coarse positioning system also used in the OSO-C and OSO-F systems permits the implementation of almost any ground computer program desired for fine positioning of the instrument on a spectral line. As an additional aid to this operation, continuous telemetry readout of the grating sector position, direction of travel, and stop indication can be provided. This readout is further detailed in the section on Housekeeping Data.

GSFC Command 22 - Command 344: This command applies +19 V day power to the grating spectrometer high voltage power supply.

GSFC Command 23 - Command 345: This command applies +19 V day power to the single spectrometer high voltage power supply.

GSFC Command 24 - Command 346: This command applies +19 V day power to the 1 to 2.5 Angstrom (DSS) detector high voltage power supply.

GSFC Command 25 - Command 347: This command applies +19 V day power to the 2.5 to 6.5 Angstrom (DSL) detector high voltage power supply.

GSFC Command 26 - Command 348: This command removes +19 V day power from all high voltage power supplies.

GSFC Command 27 - Command 349: This command provides an alternate command channel for firing the squib-actuated retaining pins on the three instrument housings. It is redundant with GSFC Command 19.

GSFC Command 28 through 30: Spare

A signal known as the "playback gate" is received from the satellite electronics during the time that the tape recorder is playing back data to the ground station via the transmitter. At this time, no telemetry readout from the instrument package is possible, since both the tape recorder and the real-time transmitter are employed in this operation. During the period of the "playback gate", all spectrometers except the grating spectrometer are immediately stopped in whatever position they may be. (This is done to conserve power and to preserve continuity of data.) The grating spectrometer, if moving at fast speed, continues until it arrives at a scheduled slow speed operation such as at a sector, at which point it stops until the end of the playback gate. When the "playback gate" goes down, all operations are resumed where they left off, except where a change in command has been received by the command memory during the playback period. In this case, the appropriate instrument would respond to the new instructions.

Data Readout Format

Eight main-frame words have been assigned to the GSFC Pointed Experiment. (Ref: OSO-E Command and Telemetry Requirements, dated 16 December 1964). The sequence is as shown in Figure 2. These are designated for data readout as follows:

Words 1 and 2	16 bit - Grating Spectrometer 25 to 400 A Readout

GSFC X-Ray

Date	Orbit	Station	Command	Command Time
Jan 22 69	0000	GBUR	348	172301
"	"	"	341	172302.
"	"	"	349	172303
"	"	"	341	172304
Jan 22 69	0000	GBUR	349	172305
Jan 22 69	0001	GYRS	348	183510
"	"	"	341	183511
"	"	"	349	183512
"	"	"	341	183513
Jan 22 69	0001	GYRS	349	183514
Jan 23 69	0012	GYRS	348	114410
"	"	"	302	114411
"	"	"	348	114412
"	"	"	302	114413
"	"	"	348	114414
"	"	"	332	114415
"	"	"	302	114416
"	"	"	348	114417
Jan 23 69	0012	GYRS	332	114418
Jan 23 69	0013	GYRS	348	132440
"	"	"	302	132441
"	"	"	348	132442
"	"	"	302	132443
"	"	"	348	132444
"	"	"	331	132445
"	"	"	329	132446
"	"	"	306	132447
Jan 23 69	0013	GYRS	312	132448
Jan 23 69	0015	GYRS	330	164800
"	"	"	313	164801
Jan 23 69	0015	GYRS	307	164802
Jan 24 69	0026	GYRS	310	095130
Jan 26 69	0057	GYRS	348	112630
"	"	"	331	112631
"	"	"	339	112632
"	"	"	346	112633
"	"	"	348	112642
Jan 26 69	0057	GYRS	346	112830
Jan 26 69	0058	GYRS	331	130200
"	"	"	347	130202
"	"	"	348	130210
"	"	"	347	130900
"	"	"	348	130930
"	"	"	346	131002
Jan 26 69	0058	GYRS	312	131030

GSFC X-Ray

Date	Orbit	Station	Command	Command Time
Jan 26 69	0059	GYRS	348	144853
"	"	"	339	144855
"	"	"	347	144915
Jan 26 69	0059	GYRS	312	144945
Jan 27 69	0073	GYRS	348	125600
"	"	"	331	125602
"	"	"	338	125615
"	"	"	345	125617
"	"	"	348	125622
"	"	"	345	130325
Jan 27 69	0073	GYRS	348	130355
Jan 27 69	0074	GYRS	331	143700
"	"	"	345	143702
"	"	"	329	143735
"	"	"	339	144340
"	"	"	346	144342
"	"	"	347	144415
"	"	"	334	144445
Jan 27 69	0074	GYRS	313	144447
Jan 27 69	0075	GYRS	313	162715
Jan 28 69	0088	GYRS	348	125010
"	"	"	331	125011
"	"	"	311	125012
"	"	"	344	125013
"	"	"	348	125020
"	"	"	344	125715
"	"	"	348	125745
"	"	"	346	125746
"	"	"	347	125747
Jan 28 69	0088	GYRS	345	125748
Jan 28 69	0089	GYRS	331	143845
"	"	"	334	143847
"	"	"	313	143848
"	"	"	344	143900
Jan 28 69	0089	GYRS	306	143902
Jan 29 69	0105	GAVE	310	155900
"	"	"	307	160005
"	"	"	310	160140
"	"	"	307	160245
"	"	GAVE	307	160415
"	"	GYRS	306	160930
Jan 29 69	0105	GYRS	307	161605

GSFC λ-Ray

Date	Orbit	Station	Command		Command Time
Jan 31 69	0133	GYRS	331		123330
"	"	"	339	330	124226
Jan 31 69	0133	GYRS	312		124315
Feb 02 69	0164	GYRS	309		140300
Feb 02 69	0164	GYRS	307		140415
Feb 05 69	0205	GYRS	340		070010
Feb 05 69	0207	GYRS	312		103015
"	"	"	329		103016
Feb 05 69	0207	GYRS	307		103017
Feb 14 69	0351	GYRS	310		231615
"	"	"	309		231720
Feb 14 69	0351	GYRS	311		231740 ≈ 100λ
Feb 15 69	0353	GBUR	310		031700
Feb 15 69	0353	GBUR	308		031730
Feb 15 69	0355	GYRS	307		061000
Feb 18 69	0410	GYRS	339		211015
"	"	"	312		211910
Feb 18 69	0410	GYRS	339	33.28	211943 133 S (STEP 380)
Feb 18 69	0411	GYRS	338		225101
"	"	"	329		230010
Feb 18 69	0411	GYRS	338	29.44	230039 139 L
Feb 19 69	0412	GYRS	329		003315
Feb 19 69	0412	GYRS	338	81.92	003437 395L
Feb 19 69	0413	GROS	312		021600
Feb 19 69	0413	GROS	329		021610
Feb 19 69	0425	GYRS	309		211210
"	"	"	310		211215
Feb 19 69	0425	GYRS	311	18.96	211233 ≈ 240λ
Feb 19 69	0426	GYRS	307		224530
Feb 20 69	0427	GROS	307		002900
Feb 20 69	0427	GROS	329		002910
Feb 20 69	0440	GYRS	309		205815
"	"	"	310		205920
Feb 20 69	0440	GYRS	311	3.14	205923 ≈ 370λ

GSFC X-Ray

Date	Orbit	Station	Command		Command Time	
Feb 20 69	0441	GYRS	· 338		224151 ✓	LOST COMPUTER
Feb 20 69	0441	GYRS	· 329		224810 ✓	
Feb 21 69	0442	GROS	· 329		003000 ✓	
Feb 21 69	0442	GROS	· 307		003030 ✓	
Feb 21 69	0455	GYRS	· 309		205200 ✓	
"	"	"	· 310		205305 ✓	
"	"	"	· 311	27.24	205332 ✓ 171 L	(missed L
"	"	"	· 343		210010	
"	"	"	· 343		210020	not locked
"	"	"	· 343		210030	
"	"	"	· 343		210040	
Feb 21 69	0455	GYRS	· 307		210210	
Feb 21 69	0456	GYRS	· 338		223500 ✓ 81 L	
"	"	"	· 329		224210 ?	not locked
Feb 21 69	0456	GYRS	· 338	18.54	224228 ✓ 139 L	
Feb 22 69	0457	GROS	· 307		002330 ✓	
Feb 22 69	0457	GROS	· 329		002400 ✓	
Feb 22 69	0470	GYRS	· 338		204740 ✓ 73 L	
"	"	"	· 329		205410 ✓	
Feb 22 69	0470	GYRS	· 338	19.52	205429 ✓ 139	
Feb 22 69	0471	GYRS	· 329		222800 ✓	
"	"	"	· 338	57.60	222857 ✓ 319	Looks short
"	"	"	· 329		223615 ✓	
Feb 22 69	0471	GYRS	· 338	0.8	223616 ✓	
Feb 23 69	0472	GROS	· 329		001800 ✓	
Feb 23 69	0484	GYRS	· 338		190937 ✓ 788 S	
Feb 23 69	0485	GYRS	· 329		204000 ✓	
Feb 23 69	0485	GYRS	· 338	62.40	204102 ✓ 594 S	
Feb 23 69	0486	GYRS	· 329		223000 ✓	
Feb 24 69	0499	GYRS	338		185435 ✓	
"	"	"	329		190110 ✓	
Feb 24 69	0499	GYRS	338	76.16	190226 ✓ 784 S	
Feb 24 69	0500	GYRS	329		203400 ✓	
Feb 24 69	0500	GYRS	338	61.44	203502 ✓ 592 S	
Feb 24 69	0501	GROS	329		221730 ✓	

GSFC X-Ray

Date	Orbit	Station	Command		Command Time
Feb 25 69	0514	GYRS	338		184830 ✓
"	"	"	329		185510 ✓
Feb 25 69	0514	GYRS	338	57.60	185607 ✓ 753 S
Feb 25 69	0515	GYRS	339		202746 ✓
"	"	"	312		203610 ✓
Feb 25 69	0515	GYRS	339	19.52	203629 ✓ 378 S
Feb 25 69	0517	GYRS	329		235100 ✓
Feb 25 69	0517	GYRS	338		235343 ✓ 245 S
Feb 26 69	0523	GAGO	312 329		101410 ✓
Feb 26 69	0529	GYRS	338		185110 ✓ 245 L
Feb 26 69	0530	GYRS	339		203124 ✓ ? 375 L
Feb 27 69	0537	GAGO	312		082620 ✓
Feb 27 69	0537	GAGO	329		082630 ✓
Feb 27 69	0543	GYRS	338		165545 ✓ 189 L
"	"	"	308		165655 ✓
"	"	"	329		170211 ✓
Feb 27 69	0543	GYRS	338	17.92	170228 ✓ 245 L
Feb 27 69	0544	GYRS	339		183540 ✓ 490 S
"	"	"	307		183900 ✓
"	"	"	312		184210 } FAILED
"	"	"	339		184246 } ✓
"	"	"	312		184456
Feb 27 69	0544	GYRS	339	36.16	184532 ✓ 378 S
Feb 28 69	0552	GAGO	312		082020 ✓
Feb 28 69	0552	GAGO	329		082030 ✓
Feb 28 69	0558	GYRS	332		165030 ✓ 164931.4
"	"	"	302		165710 } 05610
"	"	"	339		165825 } not [illegible]
Feb 28 69	0558	GYRS	308	74.52	165835 } 380 L) 378*
Feb 28 69	0559	GYRS	332		183115 ✓ 185116.5
"	"	"	302		183810 ✓
"	"	"	338	53.44	183903 ✓ 725 L
Feb 28 69	0559	GYRS	307		183936 ✓
Feb 28 69	0560	GYRS	329		201100 ✓
Feb 28 69	0560	GYRS	338 238	8.96	201109 ✓ [illegible] L 1.15
Mar 01 69	0573	GYRS	308		164420

GSFC X-Ray

Date	Orbit	Station	Command		Command Time
Mar 01 69	0574	GYRS	306		183020
Mar 01 69	0575	GROS	329		200500
"	"	"	338		200640 ? 104 S
"	"	"	329		201310
Mar 01 69	0575	GROS	338		201510 666 S
Mar 01 69	0576	GYRS	329		214630
"	"	"	338		214730 483 S
"	"	"	329		215410
Mar 01 69	0576	GYRS	338		215523 253 S ?
Mar 02 69	0588	GYRS	308		164120
Mar 02 69	0589	GYRS	306		182000
Mar 03 69	0603	GYRS	308		163520
Mar 03 69	0604	GYRS	306		181500
Mar 04 69	0617	GYRS	308		144850
Mar 04 69	0619	GROS	307		180730
Mar 04 69	0620	GYRS	306		194730
Mar 05 69	0632	GYRS	329		143730
Mar 05 69	0632	GYRS	308		143925
Mar 05 69	0633	GYRS	307		162110
Mar 05 69	0634	GYRS	306		180210
Mar 05 69	0647	GYRS	308		143720
Mar 05 69	0647	GYRS	338		144043 753 S
Mar 05 69	0648	GYRS	329		161130
"	"	"	338		161230 565 S
"	"	"	307		161400
"	"	"	329		161910
Mar 05 69	0648	GYRS	338		162020 545 S
Mar 05 69	0649	GROS	329		175550
"	"	"	338	1.92	175551
"	"	"	329		180240
Mar 05 69	0649	GROS	338	1.92	180241
Mar 05 69	0650	GYRS	329		193530
"	"	"	338	1.92	193531
"	"	"	329		194400
Mar 05 69	0650	GYRS	338	1.92	194401

GSFC X-Ray

Date	Orbit	Station	Command		Command Time
Mar 06 69	0651	GYRS	329		211700
"	"	"	338	1.92	211701
"	"	"	329		212500
Mar 06 69	0651	GYRS	338	57.96	212558 ? step 3A
Mar 07 69	0656	GAGO	329		055400
Mar 07 69	0662	GYRS	308		142800
Mar 07 69	0663	GYRS	307		161320
Mar 08 69	0676	GYRS	308		123930
Mar 08 69	0677	GYRS	307		141900
Mar 09 69	0691	GYRS	310		123915
"	"	"	330		123940
Mar 09 69	0691	GYRS	308		124020
Mar 09 69	0692	GYRS	307		141600
[illegible] 10 69	0706	GYRS	310		123315
"	"	"	330		123340
[illegible] 10 69	0706	GYRS	308		123420
Mar 10 69	0707	GYRS	307		140700
[illegible] 10 69	0707	GYRS	329		141400
Mar 11 69	0721	GYRS	308		122330
Mar 11 69	0721	GYRS	338		123015 2521
Mar 11 69	0722	GYRS	329		140100
"	"	"	338	42.56	140142 3854
Mar 11 69	0722	GYRS	307		140500 723 1618 3
	723		[illegible]	6.4	[illegible] 6.4 3
Mar 11 69	0724	GYRS	330		172500
"	"	"	338	6.4	172507
"	"	GBUR	330		175900
Mar 11 69	0724	GBUR	338	6.4	175901 175907
Mar 11 69	0725	GYRS	330		190600
"	"	"	338	6.4	190606
"	"	"	329		191330
Mar 11 69	0725	GYRS	338	21.76	191352 4784
Mar 12 69	0728	GAGO	329		002410
Mar 12 69	0736	GYRS	338		121425 R 00 L
"	"	"	308		122030
Mar 12 69	0736	GYRS	329		122210

GSFC X-Ray

Date	Orbit	Station	Command		Command Time
Mar 14 69	0763	GQUI	.330		084000
Mar 14 69	0764	AORR	.329		094500
Mar 14 69	0765	GYRS	.332		102810
"	"	"	.302		102815 (DS WAS ON
"	"	"	.314		102816 STEP 3)
"	"	"	.309		102830
Mar 14 69	0765	GYRS	.308		102935
Mar 14 69	0766	GYRS	.306		120600
Mar 14 69	0766	GYRS	.338		121140 753S
Mar 14 69	0767	GROS	.329		134300
"	"	"	.338	85.76	134426 785S
"	"	"	.312		135110
"	"	"	.329		135120
Mar 14 69	0767	GROS	.338	85.76	135246 217S
Mar 14 69	0768	GYRS	.332		152510
"	"	"	.302		153310
Mar 14 69	0768	GYRS	.339	49.28	153359 215 L
Mar 15 69	0775	GAGO	.329		032810
Mar 15 69	0778	GQUI	.330		083400
Mar 15 69	0780	GYRS	.309		102230
"	"	"	.308		102335
Mar 15 69	0780	GYRS	.329		102336
Mar 15 69	0781	GYRS	.306		115915
Mar 15 69	0781	GYRS	.338		120419 202 L
Mar 16 69	0790	GAGO	.329		032215
Mar 16 69	0793	AORR	.330		075400
Mar 16 69	0795	GYRS	.329		101207
"	"	"	.309		101630
Mar 16 69	0795	GYRS	.308		101735
Mar 16 69	0796	GYRS	.338		114945 202 L
"	"	"	.306		115300
"	"	"	.329		115810
Mar 16 69	0796	GYRS	.338	44.80	115855 202 L
Mar 17 69	0809	GYRS	.330		082700
Mar 17 69	0810	GYRS	.329		100915
"	"	"	.307 309		100930
Mar 17 69	0810	GYRS	.308		101035

GSFC X-Ray

Date	Orbit	Station	Command		Command Time
Mar 17 69	0812	GROS	.338		132430 ✓ 78 L
"	"	"	.306		132830 ✓
"	"	"	.329		133330 ✓
Mar 17 69	0812	GROS	.338	39.68	133407 202 L
Mar 18 69	0824	GYRS	313		081630 ✓
Mar 18 69	0825	GYRS	309		100410 ✓
"	"	"	308		100515 ✓
Mar 18 69	0825	AORR	312		110200 ✓
Mar 18 69	0826	GROS	.339		113800 ✓
"	"	"	.306		114120 ✓
"	"	"	.312		114530 ✓
Mar 18 69	0826	GROS	.339	37.76	114607 ✓ 215 L
Mar 19 69	0837	GQUI	.330		062750
Mar 19 69	0838	AORR	.309		073455 ✓
Mar 19 69	0838	AORR	.308		073600 ✓
Mar 19 69	0841	GROS	.306		113530 ✓
Mar 19 69	0841	GROS	.329		113540 ✓
Mar 19 69	0842	GYRS	.338		132149 ✓ 153 S
Mar 19 69	0843	GYRS	.329		145400 ✓
"	"	"	.338	85.76	145526 ✓ FAILED
Mar 19 69	0843	GYRS Voice	.338		150208 ✓ 268 S
Mar 20 69	0853	AORR	.309		072425 ✓
"	"	"	.313		072500 ✓
Mar 20 69	0853	AORR	.308		072530 ✓
Mar 20 69	0856	GROS	.306		112620 ✓
Mar 20 69	0856	GROS	.312		112630 ✓
Mar 20 69	0857	GYRS	.339		130800 ✓ 72 L
"	"	"	.312		131510 ✓
Mar 20 69	0857	GYRS	.339	45.76	131556 ✓ 215 L
Mar 21 69	0867	AORR	.330		054100 ✓
Mar 21 69	0869	GYRS	.329		075900 ✓
"	"	AORR	.309		090100 ✓
Mar 21 69	0869	AORR	.308		090205 ✓
Mar 21 69	0872	GYRS	.338		131050 ✓ 755 S

306

GSFC X-Ray

Date	Orbit	Station	Command		Command Time
Mar 21 69	0873	GYRS	329		144200
"	"	"	338	86.08	144327
"	"	"	329		145010
Mar 21 69	0873	GYRS	338	86.08	145137 Step 215 L
Mar 21 69	0878	GAGO	312		232200
Mar 22 69	0882	AORR	309		053530
Mar 22 69	0882	AORR	308		053635
Mar 22 69	0884	GYRS	306		075300
Mar 23 69	0897	AORR	309		052600
"	"	"	308		052705
Mar 23 69	0897	AORR	313		052715
Mar 23 69	0899	GYRS	306		074630
Mar 23 69	0899	GYRS	312		074640
Mar 23 69	0902	GYRS	339		124943 19L
"	"	"	312		125610
Mar 23 69	0902	GYRS	339	62.72	125713 215 L
Mar 24 69	0913	AORR	309		070400
Mar 24 69	0913	AORR	308		070430
Mar 24 69	0914	AORR	306		084400
Mar 25 69	0925	GQUI	330		022830
Mar 25 69	0926	AORR	329		033600
Mar 25 69	0927	AORR	338		051400 183L
"	"	"	329		052110
Mar 25 69	0927	AORR	338	47.68	052158 202L
Mar 25 69	0928	GYRS	308		055330
Mar 25 69	0929	AORR	306		083830
Mar 26 69	0939	GAPU	313		004000
Mar 26 69	0941	AORR	309		032900
Mar 26 69	0941	AORR	308		033005
Mar 26 69	0942	GYRS	312		040900
"	"	AORR	339		050630 20 L
"	"	"	312		051100
Mar 26 69	0942	AORR	339	29.44	051130 212 L

GSFC X-Ray

Date	Orbit	Station	Command		Command Time
Mar 26 69	0943	AORR	309		064800
"	"	"	348		064930
"	"	"	344		065100
"	"	"	345		065200
"	"	"	346		065300
"	"	"	347		065400
"	"	"	332		065500
"	"	"	302		065530
Mar 26 69	0943	AORR	306		065645
Mar 26 69	0948	GBUR	313		144900
Mar 26 69	0949	GBUR	312		163130
Mar 27 69	0956	AORR	309		032300
Mar 27 69	0956	AORR	308		032405
Mar 27 69	0957	AORR	339		050045
"	"	"	312		050600
Mar 27 69	0957	AORR	339	48.00	050648
Mar 27 69	0958	AORR	306		064600
Mar 27 69	0968	GAPU	329		224720
Mar 28 69	0970	GQUI	330		021000
Mar 28 69	0971	AORR	309		031600
Mar 28 69	0971	AORR	308		031705
Mar 28 69	0972	GYRS	329		035600
"	"	AORR	338		045745
"	"	"	329		050100
Mar 28 69	0972	AORR	338	43.52	050144
Mar 28 69	0973	AORR	306		063800
Mar 29 69	0986	AORR	309		031000
Mar 29 69	0986	AORR	308		031105
Mar 29 69	0988	AORR	306		063300
Mar 31 69	1016	AORR	309		025700
Mar 31 69	1016	AORR	308		025805
Mar 31 69	1018	GROS	306		051830
Mar 31 69	1029	AORR	330		233000

GSFC X-Ray

Date	Orbit	Station	Command		Command Time
Apr 01 69	1030	AORR	309		011500
"	"	"	329		011530
Apr 01 69	1030	AORR	308		011605
Apr 01 69	1031	AORR	338		025200 Step 85 to long λ
"	"	"	329		025430
Apr 01 69	1031	AORR	338	37.44	025508 Step 202 to long λ.
Apr 01 69	1033	GYRS	306		051220
Apr 02 69	1045	AORR	309		010550
Apr 02 69	1045	AORR	308		010655
Apr 02 69	1048	GROS	306		050630
Apr 03 69	1060	AORR	309		005800
Apr 03 69	1060	AORR	308		005905
Apr 03 69	1061	GYRS	329		013700
Apr 03 69	1063	GROS	306		050000
Apr 03 69	1074	AORR	309		231000
"	"	"	308		231105
Apr 03 69	1074	AORR	313		231310
Apr 04 69	1075	AORR	312		005034
"	"	"	338		005058 Step 210 to [illegible]
"	"	"	329		005654
Apr 04 69	1075	AORR	338	2.24	005656 Step 217 to [illegible]
Apr 04 69	1076	AORR	339		023200 Step 72 to long
"	"	"	312		023500
Apr 04 69	1076	AORR	339	44.80	023545 Step 212 to [illegible]
Apr 04 69	1077	GYRS	306		031300
Apr 04 69	1089	AORR	309		230400
Apr 04 69	1089	AORR	308		230505
Apr 05 69	1091	AORR	306		022600
Apr 05 69	1104	AORR	330		225700
"	"	"	309		225710 not sent :(
Apr 05 69	1104	AORR	308		225815
Apr 06 69	1105	AORR	329		003900

GSFC X-Ray

Date	Orbit	Station	Command		Command Time	
Apr 06 69	1106	AORR	338		021845	✓
"	"	"	306		021950	✓
"	"	"	329		022300	✓
Apr 06 69	1106	AORR	338		022309	✓
Apr 06 69	1119	AORR	309		225200	✓
Apr 06 69	1119	AORR	308		225305	✓
Apr 07 69	1121	AORR	306		021300	✓
Apr 07 69	1134	AORR	309		225010	✓
Apr 07 69	1134	AORR	308		225115	✓
Apr 08 69	1136	AORR	306		020800	✓
Apr 08 69	1140	GBUR	329		082400	✓ ✓
Apr 08 69	1140	GBUR	312		082410	✓
Apr 09 69	1150	AORR	309		002000	✓
Apr 09 69	1150	AORR	308		002105	✓
Apr 09 69	1152	GROS	306		024030	✓
Apr 09 69	1162	GQUI	330		194530	✓
Apr 10 69	1163	AORR	339		205045	✓
"	"	"	329		205230	✓
"	"	"	309		205240	✓
"	"	"	308		205345	✓
"	"	"	312		205630	✓
Apr 10 69	1163	AORR	339	65.28	205800 Manually	" good
Apr 10 69	1164	GYRS	309		212630	✓
"	"	"	306		212735	✓
"	"	"	311	32.00	212807	✓ 335 d
"	"	"	333		213510	✓
"	"	AORR	338		223530	✓ step 427 to 5 d
"	"	"	329		223800	✓
"	"	"	338	57.60	223857	✓ step 247 to short d
Apr 10 69	1164	AORR	312		223907	✓
Apr 10 69	1177	GQUI	330		193930	✓
Apr 10 69	1178	AORR	309		204400	? not loaded
"	"	"	308		204505	?
Apr 10 69	1178	AORR	329		204530	✓
Apr 10 69	1179	AORR	338		222806	✓ step 36 to long d
"	"	"	329		223100	✓
Apr 10 69	1179	AORR	338	53.12	228153	✓ step 202 to long d

GSFC X-Ray

Date	Orbit	Station	Command		Command Time	
Apr 10 69	1180	GYRS	339		230230	Step 419 to Short ✓
"	"	"	306		230400	✓
"	"	"	312		230910	✓
Apr 10 69	1180	GYRS	339	66.24	231016	Step 212 to Short ✓
Apr 11 69	1193	AORR	309		204100	✓
Apr 11 69	1193	AORR	308		204205	✓
Apr 11 69	1194	AORR	306		222100	
Apr 12 69	1208	AORR	309		203710	✓
Apr 12 69	1208	AORR	308		203815	✓
Apr 12 69	1210	GYRS	306		225200	✓
Apr 13 69	1222	AORR	309		184900	✓
Apr 13 69	1222	AORR	308		185005	✓
Apr 13 69	1225	GYRS	306		210400	✓
Apr 14 69	1232	GACO	329		104500	✓
Apr 14 69	1232	GAGO	312		104530	✓
Apr 14 69	1238	GYRS	309		192110	✓
Apr 14 69	1238	GYRS	308		192215	✓
Apr 14 69	1240	GROS	306		224050	✓
Apr 15 69	1253	GYRS	309		191430	✓
Apr 15 69	1253	GYRS	308		191535	✓
Apr 15 69	1254	GYRS	339		204750	Step 92 to Long ✓
"	"	"	306		205100	✓
"	"	"	312		205610	✓
Apr 15 69	1254	GYRS	339	38.84	205649	Step 212 to Long ✓
Apr 15 69	1255	GROS	338		222936	Step 21 to Long ✓
"	"	"	329		223815	✓ OPERATOR
Apr 15 69	1255	GROS	338	5.79	223821	✓ ERROR 57.92
Apr 16 69	1256	GYRS	329		001200	✓
Apr 16 69	1256	GYRS	338	52.13	001252	Step 202 to Lo
Apr 16 69	1269	GYRS	309		205010	✓
Apr 16 69	1269	GYRS	308		205115	✓
Apr 16 69	1270	GROS	306		222650	✓

GSFC X-Ray

Date	Orbit	Station	Command		Command Time
Apr 18 69	1293	GAGO	330		120230
Apr 18 69	1295	AORR	329		145200
Apr 18 69	1297	GYRS	309		171510
Apr 18 69	1297	GYRS	308		171615
Apr 18 69	1298	GYRS	338		184930 step 14 to long
"	"	"	306		185100
"	"	"	329		185610 step 250 to Co
Apr 18 69	1298	GYRS	338	75.52	185725
Apr 18 69	1299	GROS	312		203430 NO ERROR - (CM
Apr 18 69	1300	GYRS	330		221200
Apr 18 69	1300	GYRS	338	10.24	221210
Apr 18 69	1301	GYRS	330		235315
Apr 18 69	1301	GYRS	338	10.24	235325
Apr 19 69	1302	GBUR	330		021600
Apr 19 69	1302	GBUR	338	10.24	021601
Apr 19 69	1303	GBUR	330		035800
Apr 19 69	1303	GBUR	338	10.24	035801
Apr 19 69	1304	GBUR	330		053830
Apr 19 69	1304	GBUR	338	10.24	053831
Apr 19 69	1306	GAGO	330		083800
Apr 19 69	1306	GAGO	338	10.00	083810
Apr 19 69	1307	GAGO	330		101900
Apr 19 69	1307	GAGO	338	10.00	101910
Apr 19 69	1308	GAPU	330		115400
Apr 19 69	1308	GAPU	338	10.00	115410
Apr 19 69	1309	GAPU	330		133730
Apr 19 69	1312	GYRS	331		170130
"	"	"	309		170830
Apr 19 69	1312	GYRS	308		170935
Apr 19 69	1313	GYRS	309		184145
"	"	"	306		184250
Apr 19 69	1313	GYRS	311	55.36	184345 SUN
Apr 19 69	1315	GYRS	306		220845

GSFC X-Ray

Date	Orbit	Station	Command		Command Time
Apr 20 69	1327	GYRS	309		170210
Apr 20 69	1327	GYRS	308		170315
Apr 20 69	1328	GYRS	306		183900
Apr 21 69	1342	GYRS	309		165510
Apr 21 69	1342	GYRS	308		165615
Apr 21 69	1343	GYRS	339		183045
"	"	"	306		183300
"	"	"	312		183710
Apr 21 69	1343	GYRS	339	88.64	183838
Apr 22 69	1354	GQUI	329		131730
Apr 22 69	1356	GYRS	309		150125
Apr 22 69	1356	GYRS	308		150230
Apr 22 69	1357	GYRS	338		164115 Step 101 to [illegible]
"	"	"	306		164500
"	"	"	329		165020 [illegible] of Mode
Apr 22 69	1357	GYRS	338	31.68	165051 Step 200 to [illegible]
Apr 22 69	1358	AORR	330		193100
Apr 22 69	1358	AORR	338	10.24	193110
Apr 22 69	1359	GYRS	330		200515
Apr 22 69	1359	GYRS	338	10.24	200525
Apr 22 69	1360	GYRS	330		214615
Apr 22 69	1360	GYRS	338	10.24	214625
Apr 23 69	1362	GBUR	330		015230
Apr 23 69	1362	GBUR	338	10.24	015231
Apr 23 69	1363	GBUR	330		033200
Apr 23 69	1363	GBUR	338	10.24	033201
Apr 23 69	1367	GAPU	330		095420
Apr 23 69	1367	GAPU	338	10.00	095430
Apr 23 69	1368	GAPU	330		113130
Apr 23 69	1369	GQUI	329		131300
Apr 23 69	1371	GYRS	309		145425
Apr 23 69	1371	GYRS	308		145530
Apr 23 69	1372	GYRS	306		163900
Apr 23 69	1372	GYRS	338		164551 Step 226 to [illegible]

GSFC X-Ray

Date	Orbit	Station	Command		Command Time
Apr 23 69	1373	GYRS	330		182100
Apr 24 69	1386	GYRS	309		145510
"	"	"	308		145615
Apr 24 69	1386	AORR	329		155400
Apr 24 69	1387	GYRS	306		163200
Apr 24 69	1387	GYRS	338		164005 step 565 to short λ
Apr 24 69	1388	GYRS	329		181100
"	"	"	338	95.65	181235 step 264 to short λ
"	"	"	329		181910
Apr 24 69	1388	GYRS	338	50.24	182000 step 107 to short λ
Apr 25 69	1398	GQUI	330		111930
Apr 25 69	1401	GYRS	309		144130
Apr 25 69	1401	GYRS	308		144235
Apr 25 69	1402	GYRS	306		162600
Apr 25 69	1402	GYRS	312		162630
Apr 25 69	1403	GROS	339		180445 step 444 to short λ
"	"	"	312		181210
Apr 25 69	1403	GROS	339	74.24	181324 step 212 to short λ
Apr 28 69	1445	GYRS	329		124600
Apr 28 69	1446	GYRS	338		143110 step 41 to long λ
Apr 28 69	1447	GYRS	329		160400
Apr 28 69	1447	GYRS	338	21.12	160421 step 107 to long λ
Apr 29 69	1457	GQUI	330		091330
Apr 29 69	1460	AORR	329		134100
Apr 29 69	1461	GROS	338		142645 step 860 to short λ
Apr 29 69	1462	GYRS	329		155700
Apr 29 69	1462	GYRS	338		160748 step 106 to long λ
Apr 30 69	1472	AORR	330		083330
Apr 30 69	1475	AORR	329		133400
Apr 30 69	1476	GYRS	330		141830

GSFC X-Ray

Date	Orbit	Station	Command		Command Time
May 01 69	1487	AORR	330		082600
	1490	AORR	329		
May 01 69	1491	GYRS	338		140540 660 to short
"	"	"	329		141210
May 01 69	1491	GYRS	338	86.40	141336 390 to shor
May 01 69	1493	GYRS	329		173410
May 01 69	1493	GYRS	338	90.56	173541 107 to sho
May 02 69	1502	AORR	330		081945
May 02 69	1504	AORR	329		114100
May 02 69	1504	AORR	313		114115
May 02 69	1505	GYRS	338		121502 6 to long
"	"	"	329		122410
"	"	"	338	16.04	122425 53 to lon
May 02 69	1505	AORR	312		132100
May 02 69	1506	GROS	339		135700 367 to sh
"	"	"	312		140530
May 02 69	1506	GROS	339	49.60	140531 : 212 to short
May 04 69	1530	GAPU	330		051730
May 05 69	1549	AORR	329		112200
May 05 69	1550	GYRS	338		115815 576 to short
"	"	"	329		120510
May 05 69	1550	GYRS	338	72.32	120622 350 to sho
May 05 69	1551	GBUR	330		141200
"	"	"	338	10.24	141210
"	"	"	330		142100
May 05 69	1551	GBUR	338	10.24	142110
May 05 69	1552	GYRS	330		152800
"	"	"	338	10.24	152810
"	"	GBUR	330		155700
May 05 69	1552	GBUR	338	10.24	155710
May 05 69	1553	GYRS	330	10.24	170915
"	"	"	338		170925
"	"	GBUR	330		173600
May 05 69	1553	GBUR	338	10.24	173610
May 05 69	1554	GBUR	330		191900
May 05 69	1566	GYRS	329		134050

GSFC X-Ray

Date	Orbit	Station	Command		Command Time
May 05 69	1567	GYRS	330		152110
May 07 69	1580	GROS	329		114900
May 07 69	1581	GYRS	338		132525 337 To Long
"	"	"	329		133310
May 07 69	1581	GYRS	338	44.80	133355 477 to Long
May 08 69	1589	GAPU	330		031030
May 08 69	1596	GYRS	329		132215
May 08 69	1597	GYRS	338		150140
May 08 69	1597	GYRS	330		150820
May 09 69	1604	GAPU	330		030330
May 09 69	1610	GROS	329		113530
May 09 69	1611	GYRS	338		131315 67 to (
"	"	"	329		132110
May 09 69	1611	GYRS	338	48.00	132158 217 To
May 10 69	1619	GAPU	330		025620
May 10 69	1619	GAPU	313		025630
May 13 69	1669	GBUR	312		095830
May 13 69	1670	GYRS	339		110630 376 to 12T
"	"	"	312		111430
May 13 69	1670	GYRS	339	22.72	111450 305 to SHORT
May 13 69	1671	GYRS	312		124700
May 13 69	1671	GYRS	339		124730
May 15 69	1700	GYRS	312		105230
"	"	"	339		105400
"	"	"	312		110120
May 15 69	1700	GYRS	339	67.84	110227 213 To
May 16 69	1713	GBUR	309		080100
"	"	"	306		080209
May 16 69	1713	GBUR	311	55.36	080210 3:4 λ

GSFC X-Ray

Date	Orbit	Station	Command	Command Time
May 16 69	1715	GYRS	348	104630
"	"	"	344	104630
"	"	"	348	104631
"	"	"	344	104631
"	"	"	348	104632
"	"	"	344	104632
"	"	"	348	104633
"	"	"	344	104633
"	"	"	348	104634
"	"	"	344	104634
"	"	"	348	104635
"	"	"	344	104635
"	"	"	348	104636
"	"	"	344	104636
"	"	"	348	104637
"	"	"	344	104637
"	"	"	348	104638
"	"	"	344	104638
"	"	"	348	104639
"	"	"	344	104639
"	"	"	348	104640
"	"	"	344	104640
"	"	"	348	104641
"	"	"	344	104641
"	"	"	348	104642
"	"	"	344	104642
"	"	"	348	104643
"	"	"	344	104643
"	"	"	348	104644
"	"	"	344	104644
"	"	"	348	104645
"	"	"	344	104645
"	"	"	348	104646
"	"	"	344	104646
"	"	"	348	104647
"	"	"	344	104647
"	"	"	348	104648
"	"	"	344	104648
"	"	"	348	104649
"	"	"	344	104649
"	"	"	348	104650
"	"	"	344	104650
"	"	"	348	104651
"	"	"	344	104651
"	"	"	348	104652
"	"	"	344	104652
"	"	"	348	104653
"	"	"	344	104653
"	"	"	348	104654
May 16 69	1715	GYRS	344	104654

GSFC X-Ray

Date	Orbit	Station	Command		Command Time	
May 16 69	1715	GYRS	344		104715	
"	"	"	345		104725	
"	"	"	346		104735	
May 16 69	1715	GYRS	347		104745	
May 17 69	1723	GAPU	306		003020	
May 20 69	1771	GYRS	329		033840	
May 20 69	1771	AORR	338		044623	step 215 to λ
May 21 69	1783	GQUI	330		000600	
May 21 69	1786	GYRS	329		033120	
May 21 69	1787	AORR	338		043615	139 to short λ
May 22 69	1799	AORR	330		010700	
May 22 69	1801	GYRS	329		032401	
May 22 69	1801	AORR	338		043216	264 to long λ
May 23 69	1814	AORR	330		005930	
May 23 69	1816	GYRS	330		031630	
May 23 69	1816	GYRS	329		031900	
May 23 69	1817	GROS	330		045830	
May 24 69	1829	AORR	313		005300	
May 25 69	1845	GYRS	329		012345	
May 25 69	1845	AORR	338		023256	139 to long
May 25 69	1857	AORR	330		211755	
May 27 69	1878	GYRS	330		061330	
May 28 69	1892	GYRS	329		042900	
"	"	GBUR	338		050108	
"	"	"	329		050400	
May 28 69	1892	GBUR	338	30.08	050431	110 to Co
May 28 69	1899	GAGO	312		162800	
May 28 69	1900	GAPU	330		180930	
May 28 69	1903	GYRS	313		213730	

GSFC X-RAY

DATE	ORBIT	STATION	COMMAND	COMMAND TIME
June 1	1960	GQUI	330	174320
June 3	1991	AORR	312	183600
June 3	1992	GRYS	339	191340
			329	191500
			312	192020
			339 (80.96)	
June 3	1994	GROS	330	223940
June 4	2004	GQUI	330	154320
	2006	AORR	329	183100
	2007	GYRS	338	191530
	2008	GYRS	329	204530
			338	204730
			329	205410
			338	205621
June 5	2019	GQUI	330	153620
	2021	AORR	329	182400
	2022	GYRS	338	190040
			329	190710
			338 (21.76)	
June 6	2033	GAPU	330	134720
	2035	AORR	329	163700
	2036	GYRS	338	172030
	2037	GYRS	314	185200
			339 (11.52)	3 steps to short from pass 1992
			329	185920
			338 (98.56)	

GSFC X-RAY

DATE	ORBIT	STATION	COMMAND	COMMAND TIME
June 9	2078	GQUI	330	132920
			313	132930
	2080	AORR	329	161750
	2081	GYRS	338	170142
	2081	AORR	312	175820
	2082	GYRS	339	183200
			312	184030
			339 (62.72)	
	2083	GROS	329	201400
			338 (61.44)	
			329	202220
			338 (51.84)	
June 10	2091	GAGO	330	095800
	2094	AORR	329	142850
	2095	GYRS	338	151330
	2096	GYRS	329	164400
			338 (87.04)	
			329	165230
			338 (82.24)	
June 11	2106	GAGO	330	095100
	2109	AORR	329	142100
	2110	GYRS	338	145640
			329	150615
			338 (8.32)	
June 12	2121	GAPU	330	094515
	2124	AORR	329	141440
			313	141450
	2125	GYRS	338	150040
			312	155500
	2126	GYRS	339	163215
			312	164015
			339 (57.28)	
	2127	GROS	329	181230
			338	181430
			329	182120
			338 (91.52)	

GFSC X-RAY

DATE	ORBIT	STATION	COMMAND	COMMAND TIME	
June 19	2232	GYRS	329	172730	
			338 (64.00)		
			329	173520	
			338 (94.08)		
June 20	2240	GAPU	330	071230	
	2244	AORR	329	132350	
	2245	GROS	338	140841	it appears that the cmd was sent during PB. the SS should have hit the long WL m/s at 140705
	2246	GYRS	329	153900	
			338	155008	step 110 ???
June 22	2270		330	065915	
June 23	2289		329	130400	
	2290		338	134915	
	2291		329	151900	
			338 (95.00)		
			329	152710	
			338 (88.36)		
June 24	2299	GAPU	330	050430	
	2304	AORR	329	125600	
	2305	GROS	338	154055	
	2306	GYRS	329	151200	
			338 (90.00)		
			329	152020	
			338 (71.28)		
June 25	2314	GAPU	330	045730	
	2319	GROS	330	114500	
			313	114530	

GSFC X-RAY

DATE	ORBIT	STATION	COMMAND	COMMAND TIME
July 2	2423	GBUR	312	094950
	2424	GYRS	339	105710
			312	110520
			339 (24.64)	
July 3	2438	GROS	329	091520
	2438	GBUR	338	094509
			329	094930
			338	
July 4	2447	GAPU	330	003415
			306	003755
July 5	2465	GYRS	329	003415
	2465	AORR		
	2476	GAPU	330	223930
July 8	2510	AORR	338	043750
			329	044215
			338	
	2510	GYRS	329	033550
	2521	GAPU	330	222000
July 9	2525	GYRS	329	032640
	2525	AORR	338R	043603
July 9	2535	GAPU	330	203330
July 11	2555	GROS	329	031530
	2556	GYRS	330	045800
	2665	GAPU	330	201930
July 12	2569	GROS	329	012530
	2569	AORR	338	023239
	2580	GAPU	330	201300

GSFC X-RAY

DATE	ORBIT	STATION	COMMAND	COMMAND TIME
July 13	2583	AORR	313	004300
July 23	2746	AORR	329	200950
	2747	GYRS	338	204130
			329	204910
			338	
July 24	2757	GAPU	330	134850
	2761	AORR	329	200150
	2762	GYRS	338	204305
July 25	2772	GAPU	330	134200
July 30	2846	GAPU	307	112730

GSFC X-RAY

DATE	ORBIT	STATION	COMMAND	COMMAND TIME
	3485	AORR	329	
	3485	GYRS	338	185630
	3485	AORR	329	195500
			338	
			332	195600
			302	195605
	3486	GYRS	332	202700
			302	202710
	3487	GYRS	332	221710
			302	221810
August 22	3192	GROS	329	085430
	3193	GYRS	338	104355 ✓
August 23	3201	GQUI	330	002030 ✓
August 26	3252	GRPS	329	082600
August 27	3265	AORR	329	055900 ✓
	3265	AORR	338	060015 ✓
			330	060330 ✓
			338	060426
	330		345	122700

DATE	ORBIT	STATION	COMMAND	COMMAND TIME
	3500	AORR	348	195000
			345	195005
			344	195130
			346	195135
			347	195140
	3500	GYRS	348	202820
			345	202830
			344	203030
			346	203040
			347	203050
	3501	AORR	348	212800
			345	212900
			344	213100
			346	213110
			347	213120
	3502	GROS	348	220915
			345	220945
			344	221200
			346	221210
			347	221220
			348	
			344	233030
			345	
			346	
			347	
October 21	4092	AORR	339	013520
			312	014100
			339	
October 23	4122	AORR	314	
			339	
	3330	GAGO	348	
	3340	GBUR	345	045900
			346	045930
			347	050000
			344	050030
	3383	GYRS	329	
	3383	AORR	338	014605

OBSERVED FLARES

DATE	ION CHAMBER READINGS START	MAX	PRE-FLARE	MAX	SPECTROMETER SCAN MODE OR STEP DS	SS	GS	TAPE	FILE
2-5	1330	1345	B40	B135	1	1	2	2-1	9
2-6	0720	0739	A180	C44	1	1	2	2-1	21
2-7		0530		C111	1	1	2	2-1	36
2-7	1648	1651	B40	C72	1	1	2	2-1	43
2-9		0658	A100	C53	1	1	2	2-1	68
2-11	1034	1039	B40	D35	1	1	2	2-2	101
2-19	0457	0501	B30	B106	1	1	2	4-1	1
2-20	0450	0453	B34	B60	1	1	2	4-1	32
2-20	0619	0622	B27	D45	1	1	2	4-1	34
2-23	0442	0450	B67	C190	1	1	2	4-1	82 or 83
2-24	0247	0310	B95	C42	1	1	2	4-2	95
2-24		2321	C20	D77	1	1	2	5-1	3
2-25	0859	0915	B80	D255	1	1	2	5-1	10
2-25	1650	1708	B80	C48	1	1	2	5-1	15
2-27	1358	1407	C32	D255	1	1	2	5-1	45
2-28	1337	1353	B85	C68	1	1	3	5-1	60
2-28	1930	1953	B58	D40	378	725	2	5-1	64

DATE	START	MAX	PRE-FLARE	MAX	DS	SS	GS	TAPE	FILE
3-1	0904	0916	B75	C44	378	753	2		
3-9	0817	0830	A200	C78	378	1	2	6-2	
3-10	0755	0810	A200	C90	378	2	2	7-1	4
3-13	0505	0512	B86	C43	378	1	2	7-1	48
3-13	0737	0741	B55	C56	378	1	2	7-1	50
3-23	0620	0700	B180	D42	2		3	8-2	101
3-26	1850	1921	B75	C99	1	202	1	9-1	54
3-27	0030	0230	C	D	1	202	1	9-1	58-59
3-28		0030		C159	212	202	1	9-1	74
4-14	1717	1726	B79	C75	212	202	1	12-1	39
4-14		2107	B90	C41	212	202	1	12-1	42
4-16	2039	2046	B60	C47	212	202	1	12-1	73-74
4-19	1349	1355	B39	C43	1	2	1	13-1	11
4-19	1842	1845	B36	C60	1	2	λ304	13-1	14-15
4-21		1230		C46	1	2	1	13-1	42
5-05	1316	1327	C30	C80	212	358	1	15-1	55
5-18		0235		C86	213	2	1	17-1	44
5-18	0545	0606	B73	C83	213	2	1	17-1	47

DATA FORMAT

1. INTRODUCTION

The following is a description of the format of Dr. Neupert's OSO-5 experiment data tapes. Each OSO-5 experimenter was provided with his experiment data tapes and with "correlated data" tapes containing OSO-5 commands, attitude data and other satellite information. Both kinds of tapes follow a general format described in our memorandum, included here as Attachments 1 thru 4; what remains is to give the detailed information concerning the experiment data tapes.

2. GENERAL FORMAT

The experiment data is on 7-track digital binary tapes (odd parity) in ~~800~~ 6250 BPI density. About one week of data was processed in each tape production run, consisting of about 100 data files (1 file = approx. 1 orbit); an 80-file tape is followed by one containing about 20 files.

The physical record length is fixed at 10440 bytes. The first record of each file contains the "File Label" information in the first 48 bytes (the rest of this record is unused). The File Label format is described in Attachment 1, pp. 1-1 to 1-2.

Following the label record are the experiment data records. The data is grouped into six 96-minor-frame segments, or main frames. (Each "minor frame" consists of data from one 320-msec readout cycle.) The general organization of a record is as follows:

Bytes 1 - 12 - Time information, 1st main frame.

Bytes 13-1740- Instrument/Housekeeping data (96 frames).

Bytes 1741-1752- Time information, 2nd main frame.

.
.
.

Bytes 8701-8712 - Time information, 6th main frame.

Bytes 8713-10440 - Instrument/Housekeeping data (96 frames).

When the satellite enters or leaves the earth's shadow minor frames at the beginning or end of a main frame may be zeroed out (cf. p. 2-1). Note that when darkness commences entire main frames may be blanked out; e.g. if this happens during the 2nd main frame of a record, not just the end of MF 2 but all of MF's 3-6 will be set to zeroes (including the time fields).

3. DETAILED FORMAT

A. Minor Frame Organization

For each main frame we have the time field (12 bytes) followed by 96 minor frames of data (cf. Attachment 1, pp. 1-3 thru 1-5). Nine 8-bit "words" are included, each numbered according to its order in the 32-word, 320-msec data readout cycle. We have the following:

Words 1 & 2 - Grating spectrometer data (16-bit word, high-order bits in Word #1).

Word 6 - 1st Data Housekeeping Word

" 9 - Double spectrometer (short)(DSS)

" 10 - Double spectrometer (long)(DSL)

" 17 - 2nd Data Housekeeping Word.

" 22 - Single Spectrometer (SSP).

" 30 - Ion Chamber

" 25 - Sail Subcom Word.

Each telemetry word occupies the low-order 8 bits of two six-bit bytes, the next two higher-order bits denote fill data and questionable data when set (cf. pp. 1-4 & 1-5).

B. Housekeeping Data Words

In describing the housekeeping data words, "bit 1" will indicate the high-order (2^7) bit, and "bit 8" will mean the lowest-order (2^0) bit.

1. Word 6 (1st Housekeeping Word):

a) Bits 1-3 refer to the grating spectrometer.

Bit 1 = 1 - when grating spectrometer is scanning at its fastest speed.

= 0 - when grating spectrometer is stopped, or scanning at a slower rate.

Bit 2 = 0 - when instrument is over a "sector" area.

= 1 - otherwise.

Bit 3 = 1 - when instrument is scanning from long to short wavelength (400Å to 25Å).

0 - When instrument is scanning from short to long (25Å to 400Å).

b) Bits 4-8 refer to the other spectrometers:

Bit 4 = 1 - Double spectrometer scanning from 1Å to 8Å.

= 0 - Double spectrometer scanning from 8Å to 1Å.

Bit 5 = 1 - Single spectrometer scanning from 6.5Å to 25Å.

= 0 - Single spectrometer scanning from 25Å to 6.5Å.

Bit 6 = 1 - When overflow has occurred in DSS.

Bit 7 = 1 - When overflow has occurred in DSL.

Bit 8 = 1 - When overflow has occurred in single spectrometer.

c) Overflow Processing

The overflow bit (for DSS, DSL or SSP) is set to indicate that the current instrument reading must be combined with

that in the previous minor frame to get the total count (for the previous frame). The result is a 14-bit word, the high-order six bit being those in the current frame. That is, if X is the current readout, and Y is the previous readout,

$$\text{count} = 256 * X + Y.$$

d. Spectrometer Scanning Modes

Grating Spectrometer

The grating spectrometer program is as follows: 25-400 Angstroms range, three modes of operation.

Mode 1 consists of forward travel from 400 to 25 A at one step per 0.01 second, except for the travel of the six segment areas consisting of approximately 64 steps each where the speed is one step per 0.32 second. The re-trace in this mode consists of a maximum speed scan that is 0.01 second per step. In this mode, the instrument reverses travel and returns to the long wavelength end immediately after scanning the sixth segment.

Mode 2 consists of a trace and re-trace, each having a period of 16.384 minutes, where the speed will be two steps every 0.32 second.

Mode 3 consists of a slow scan from 25 to 400 A at one step per 0.32 second for a period of 32.768 minutes, and a re-trace at one step per 0.01 second, except for the travel of six segment areas consisting of 64 steps each where the speed will be one step per 0.32 second as in Mode 1.

Data readout is inhibited whenever the instrument is traveling at the fast scan rate (0.01 seconds per step) in the forward (400-25 A) direction. Data readout is not inhibited when the instrument is traveling in the reverse direction regardless of its speed.

Total number of steps for the grating spectrometer is 6,144 approximately.

Double Spectrometer

The double spectrometer program is as follows: 1 to 2.5 Angstroms and 2.5 to 6.4 Angstroms ranges, three modes of operation:

Mode 1 consists of a scan in 2.73 minutes and a re-trace in the same time, where the speed is one step every 0.32 second, Sub-frame Division Ratio: 1:1.

Mode 2 consists of a scan in 16.38 minutes and a re-trace in the same time, where the speed is one step every 1.920 seconds. Sub-frame Division Ratio: 6:1.

Mode 3 consists of a scan in 32.76 minutes and a re-trace in the same time, where the speed is one step every 3.84 seconds. Sub-frame Division Ratio: 12:1.

The total number of steps is approximately 512.

Single Spectrometer

The single spectrometer program is as follows: 6.4 to 25 Angstroms range, two modes of operation.

Mode 1 consists of a trace in 5.46 minutes and a re-trace in the same time, where the speed is one step every 0.32 second. Sub-frame Division Ratio: 1:1.

Mode 2 consists of a scan in 21.84 minutes and a re-trace in the same time, where the speed is one step every 1.28 seconds. Sub-frame Division Ratio: 4:1.

The total number of steps is approximately 1024.

2. Word 17 (2nd Housekeeping Word):

Bits 1 and 2 - (Most Significant bits) Provide the following code identifying the sub-frame:

Sub-frame	Bits 1	Bits 2	Readout NASA S/C SIMULATOR Squibs Not Fired	Readout NASA S/C SIMULATOR Squibs Fired
1	0	0	0	1
2	0	0	0	1
3	0	0	0	1
4	1	0	4	5
5	0	0	0	1
6	0	1	2	3
7	0	0	0	1
8	1	0	4	5
9	0	0	0	1
10	0	0	0	1
11	0	0	0	1
12	1	1	6	7

Bit 3 - "1" indicates squibs fired; "0" indicates squibs not fired.

Bits 4 and 5 - End of Line and End of Raster Readout.

	Bits 4	Bits 5	NASA S/C SIMULATOR Readout
EOL	1	0	2
EOR	0	1	1
EOL & EOR	1	1	3

Bits 6, 7, and 8 - Provide a code indicating the current range of the ion chamber amplifier as follows:

Range	Code	NASA S/C SIMULATOR READOUT
1 (5×10^{-13} amps)	1 1 1	7
2 (5×10^{-12} amps)	0 0 1	1
3 (5×10^{-11} amps)	0 1 0	2
4 (5×10^{-10} amps)	1 0 0	4

ATTACHMENT 1

General Information

All OSO-F data tapes will be 7-track digital magnetic tapes written in Binary Mode. These tapes will be written in ODD parity at a density of either 556 or 800 six-bit characters to the inch as requested by experimenters.

The playback data will be processed at GSFC in approximately 100 orbit groups (about one week of data). Each tape recorder dump (playback) will be contained in a single file on tape. The elements of all files are the same and are as follows: file label, data records, end of file mark accompanied by 3 3/4 inch gap of erased tape.

Subsequent attachments discuss the two types of data tapes Main Frame (MF) and, correlated data (CDT) to be provided but some of the fields are of general nature and are covered here.

The File Label Record

The file label record though ODD parity is written in BCD mode.

BINARY CODED DECIMAL TAPE CHARACTERS

SATELLITE IDENT. NUMBER	YEAR	STATION NUMBER	STATION TAPE NUMBER	ANALOG FILE NUMBER	BUFFER FILE NUMBER	DAY COUNT OF YEAR	REAL-TIME FRAME PERIOD	TIME ACCURACY CODE	START TIME (Sec.)	UNPROCESSIBLE FILE	END TIME (Sec.)	EXPERIMENTER NUMBER			EDIT FILE	EDIT TAPE NUMBER
1 3	6 7	8 10	11 14	15 16	17 18	19 21	22 24	25	26 30	31	32 36	37 38	39 40	41 42	43 44	45 48

THIS 48-CHARACTER FORMAT SHALL BE FOLLOWED BY BINARY ZEROS REPEATED UNTIL THE FILE LABEL RECORD IS THE SAME LENGTH AS THE CORRESPONDING EXPERIMENTER'S DATA RECORD.

CHARACTERS	CONTENTS	DESCRIPTION
1-5	(assigned at launch)	The Satellite Identification No.
6-7	69	Year of Data Recording
8-10	Varies	Ground Station Code No.
11-14	Varies	Ground Station Tape No.
15-16	Varies	Ground Station Tape File No.
17-18	1-6 or 7	Intermediate Digital Tape File No.
19-21	001-365	Day Count of Year (January 1 = 001)
22-24	Usually 997	Frame Period in milliseconds = i.e. 319.97 004 = 320.04
25	1 or 2	Time Accuracy Code = time given with data ± 0.05 or 3.0 seconds
26-30	Varies	Start time of file in seconds
31	0 or 1	A "one" indicates the file was unprocessible (no data follows)
32-36	Zeros or variable	Zeros if file was unprocessible; End time in seconds if good.
37-38	60-70	Experimenter numbers
39-42	Zeros	Unused field
43-44	Varies	Edit File Number
45-48	Varies	Edit Tape Number

The above label will be equal in length to the particular experimenter data records on the MAIN FRAME tapes. On the correlated data tapes, this label will be 3120 tape characters long, thereby being equal to the attitude/orbit record lengths. The data derived from a single dump will always follow the same file label. This means that every label appearing on main frame tape will also appear on correlated data tapes. This should make selective processing possible when desired since the tapes will match on a file-by-file basis. The OSO-F experimenter numbers are as follows:

60	Rense	Colorado
61	Frost	GSFC
62	Narrow	GSFC
63	Neupert	GSFC
64	Schmidt	GSFC
65	Boyd	UCL
66	Ney	Minnesota
67	Tousey	NRL

68	Blamont	Paris
69	Chubb	NRL
70	Thompson	BBRC

Data Records

The data records will contain time vs. data. The time fields on the two tapes (1. Main Frame Data and 2. Correlated Data) are the same format. The time field (12 characters) will be discussed as "time 1" and "time 2" to simplify the discussion.

TIME 1

P	P	P	P	P	P
0	2^5	F	2^5	0	2^5
G	2^4	0	2^4	0	2^4
2^9	2^3	2^9	2^3	0	2^3
2^8	2^2	2^8	2^2	2^8	2^2
2^7	2^1	2^7	2^1	2^7	2^1
2^6	2^0	2^6	2^0	2^6	2^0
1	2	3	4	5	6

TIME 2

P	P	P	P	P	P
2^5	0	2^{23}	2^{17}	2^{11}	2^5
2^4	0	2^{22}	2^{16}	2^{10}	2^4
2^3	0	2^{21}	2^{15}	2^9	2^3
2^2	2^{26}	2^{20}	2^{14}	2^8	2^2
2^1	2^{25}	2^{19}	2^{13}	2^7	2^1
2^0	2^{24}	2^{18}	2^{12}	2^6	2^0
7	8	9	10	11	12

Note: P represents the parity bit.

CHARACT	DESCRIPTION (Based upon 36 bit computer word)
1	(G) = 1, This is the flag - time field indicator and is always a one bit.
1 - 2	Total sync word bit errors in this 96 frame record.
3	(F) = 1, Dummy data in this 96 frame record.
3 - 4	Count of sync bit errors from the frames with more than one bit error in the sync word. (Totaled for 96 frames)
5 - 6	Day count of year.
7	Count of 96 frame groups of data lost between end of this record and start of next.
8 - 12	Milliseconds of day of first bit of telemetry channel (1 of first frame in record to follow

Those experimenters who will be using computers with word lengths greater than 36 bits and also divisible by 12 can receive their time fields in whole computer words. This is done by placing "time 1" right justified in one computer word and "time 2" right justified in the next with the necessary number of leading zeros in each case to fill up the word. As an example two 60-bit computer words would hold ZZZZ time 1 ZZZZ time 2 where each "Z" represents one tape character of zeros.

The time will be given every 96 frames. This applies to both types of tapes where telemetry data is being presented. The time in the attitude/orbit records will be shown in a table of attitude record elements.

Telemetry Data Words

Each 8-bit telemetry word will be written as two six-bit tape characters.

P	P
0	2^5
0	2^4
0	2^3
0	2^2
2^7	2^1
2^6	2^0

The value of each 8-bit telemetry word is of course limited to Decimal 0-255. When you receive your tapes you will find cases wherein the 12-bit field has a greater value. The following "TRUTH TABLE" made up from the four leading zeros preceding the 8 telemetry bits will help you interpret those greater values.

	0 0 0	2^{11}	Case 1 Good Data
	0 0 0	2^{10}	2 Fill Data
	0 0 1	2^{9}	3 Questionnable Data
	0 1 0	2^{8}	
Case	1 2 3		

The definition of good data is self explanatory. Fill data (Decimal Value 256) is Fill Data provided to produce fixed length records with time continuous within a 96 Main Frame block even though a little data was lost during transmission or processing. Questionable data is that data which appeared in a main frame in which more than one bit error appeared in the main frame sync word. In this case the data as appearing will be given but it will have the decimal value of 512 added to it to signal the fact that it arrived near the time that bit errors were occurring in the data. Because this testing of the main frame sync word is done before the subcom data is separated, the subcom data will also have this flag when appropriate. The fill data (Case 2) will also appear where appropriate on correlated data tape.

Attachment 2

Main Frame Decom Tapes

These tapes will contain time (once every 96 frames) vs. main frame (MF) data. Each main telemetry frame will be scanned for the MF words requested by a particular experimenter, thus providing 96 cycles of those words in each 96 frame portion of his record. In Attachment 4 a value N is given for each experimenter tape format. This denotes the multiple of time followed by 96 main frames of data requested for each physical tape record.

Any experimenter who receives day-only or night-only data will need to know the record format in the case wherein the day/night or night/day transition takes place. It helps to describe a previous step in the processing in order to explain this point. An extensive Quality Control and EDIT program provides guaranteed record formats to the decom program which produces your experimenter tapes. This program provides records 96 frames in length with time consistant within those records. Now the experimenter tapes are made while examining (in each frame) the DAY/NIGHT INDICATOR. Since the transition will usually occur within a record, your record (assume day-only experiment) will be filled with zero data (and zero time fields if a whole 96 MF block remains to be written). This is really as one might have expected, but now when the Night/Day transition takes place the beginning of a record will be filled with zero data following a good time field. This record read into an experimenter's computer and moved into an array whereby the time is computable based upon the array address will find that the time will be correct for that portion of the 96 MF of data after the transition. The converse of all this is of course true for a night-only experimenter.

Attachment 3

Correlated Data Tapes (CDT)

These tapes will correspond file-for-file with the MF tapes. Each CDT file will contain a label (same format as MF tape label), data and EOF. The CDT format is as follows:

Record Type	Quantity	Data Type	Record Length in Characters
Label	1 Per Tape	BCD (ODD Parity)	3120
Commands	As Required	BCD (ODD Parity)	132 (Printer page record)
EOF			
Label (Repeated from above)	1 Per File	BCD (ODD Parity)	3120
Digital S/C	1(If Requested)	Binary	(Varies With Experimenters)
Wheel S/C	1(If Requested)	Binary	
Sail S/C	1(If Requested)	Binary	
Attitude Orbit	1		
Digital	1(If Requested)		
Wheel	1(If Requested)		
Sail	1(If Requested)		
Attitude Orbit	1		
.			
.			
.			
.			
.			
.			
.			
EOF (The last file on tape will have at least 2 consecutive EOF marks denoted End of Data)			

The subcom records whether DIGITAL, WHEEL, or SAIL will be described generally since they are treated identically. The following table assumes that four subcom channels are requested and that the users computer has 36-bit words. Larger computer words involve the zero fields preceding "Time 1" and "Time 2" discussed in Attachement 1.

Attachment 3 (Continued)

Computer Word		Contents	Example
#1		Time with S/C Code	200100000001$_8$ - Digital 200200000001$_8$ - Wheel 200300000001$_8$ - Sail } Day 001
Cycle 1	2	Time 2	Note: Time is time of first bit of word 1 of particular S/C cycle
	6	Digital or wheel or sail Data from 96 Main Frames	
2	7	Time 2	
	11	S/C Data from 96 MF	
.			
.			
.			
16		Time 2 S/C Data	
17		Spares (zeros if not needed)	
18		Spares (zeros if not needed)	

IRG (3/4 inch tape gap between this and next record.)

The attitude orbit record is written in 36-bit binary floating point, each record contains 8 minutes of data given on the even minute.

Each cycle for this hypothetical experimenter would be as follows:

TIME 2	1 2 3	4 S S	1 2 3	4 S S

thus assuring that each TIME 2 Field will be in a whole computer word. In those cases where the record size for CDT records (attachment 4) is greater than TIME 1 plus 18 cycles as shown above you will find additional zeros at the end to fill out to the record length indicated.

Word	Description	Units
1	Time	Day count
2	Time	Milliseconds of day
3	Satellite position vector	X-component (km)
4	Satellite position vector	Y-component (km)
5	Satellite position vector	Z-component (km)
6	Right ascension of satellite position vector	Degrees
7	Declination of satellite position vector	Degrees
8	Velocity vector	X-component (km/sec)
9	Velocity vector	Y-component (km/sec)
10	Velocity vector	Z-component (km/sec)
11	Right ascension of velocity vector	Degrees
12	Declination of velocity vector	Degrees
13	Geodetic latitude	Degrees
14	Geodetic longitude	Degrees
15	Geodetic altitude	Kilometers
16	Unit solar vector	X-component
17	Unit solar vector	Y-component
18	Unit solar vector	Z-component
19	Right ascension of unit solar vector	Degrees
20	Declination of unit solar vector	Degrees
21	McIllwain's "L" parameter	Earth radii
22	Magnetic field strength	Gauss
23	Unit magnetic vector	X-component
24	Unit magnetic vector	Y-component
25	Unit magnetic vector	Z-component
26	Right ascension of magnetic vector	Degrees
27	Declination of magnetic vector	Degrees
28	Pitch angle	Radians
29	Roll angle: Smoothed value using roll angles with less than 2° roll angle error	Radians
30	Aspect angle (between roll axis and aspect reference axis)	Radians
31	Time increment (Δt) since digital subcommutator word number one	Milliseconds
32	Roll-axis orientation	X-component
33	Roll-axis orientation	Y-component

Word	Description	Units
34	Roll-axis orientation	Z-component
35	Right ascension of roll-axis	Degrees
36	Declination of roll-axis	Degrees
37	Pitch-axis orientation	X-component
38	Pitch-axis orientation	Y-component
39	Pitch-axis orientation	Z-component
40	Right ascension of pitch-axis	Degrees
41	Declination of pitch-axis	Degrees
42	Yaw/spin-axis orientation	X-component
43	Yaw/spin-axis orientation	Y-component
44	Yaw/spin-axis orientation	Z-component
45	Right ascension of yaw/spin-axis	Degrees
46	Declination of yaw/spin-axis	Degrees
47	Aspect reference-axis orientation	X-component
48	Aspect reference-axis orientation	Y-component
49	Aspect reference-axis orientation	Z-component
50	Right ascension of aspect reference-axis	Degrees
51	Declination of aspect reference-axis	Degrees
52	Spin rate	Rev/sec.
53	Data type indicator	1.0 = Even minute data
54	Orbit number	
55	Orbit begin	Day count
56	Orbit begin	Milliseconds of day
57	Orbit end	Day count
58	Orbit end	Milliseconds of day
59	Day/night indicator (Geometric)	1.0 = Day 0.0 = Night
60	Sunlight exit (Geometric)	Day count
61	Sunlight exit (Geometric)	Milliseconds of day
62	Sunlight entrance (Geometric)	Day count
63	Sunlight entrance (Geometric)	Milliseconds of day
64-65	Unassigned	
66-520	Seven additional 65 word items (one minute each)	

(All data are represented in IBM-7094 floating point form.)

All cartesian coordinates refer to the celestial system: X = First Point of Aries

Z = Polaris

Y = Orthogonal to X and Z

The command records will be written in BCD (ODD parity) using the following FORTRAN format statements:

```
      WRITE (5,875) ICM, IPASS, IDAY, MILSEC, IHR, MIN
     1,ISEC, MSEC, (HOLT (K), K = KN, KN1)
875   FORMAT (2I5, I4, I10, 2X, I2, 1X, I2, 1X, I2, 1X
     1,I3,6H OSOF  ,6A6)
```

Note: ICM is the command number as shown in NASA-GSFC OSO-F OPPLAN, HOLT(K) is a description of the command. The other labels used in write statement are self explanatory.

Attachment 4

The following pages contain the data channels as requested by the experimenters or one of his representatives except in one or two cases where computer word sizes, packing density, N, or even S/C channel assignments in one case are assumed.

EXPERIMENTER 60 - Colorado - 556 BPI N=10

Time 1 + Time 2 (every 96 frames) - 20 Characters
Main Frame Words - 15,27
End Fill (per 96 frames) - 16 Characters
420 characters per 96 Main Frames
4200 characters per Record
170 files per tape MAXIMUM

EXPERIMENTER 61 - GSFC(Frost) - 800 BPI N=5

Time 1 + Time 2 (every 96 frames) - 12 Characters
Main Frame Words - 3,16,18,19
End Fill (per 96 frames) - 0 Characters
780 characters per 96 Main Frames
3900 characters per Record
150 files per tape MAXIMUM

EXPERIMENTER 62 - GSFC(Narrow) - 800 BPI N=20

Time 1 + Time 2 (every 96 frames) - 12 Characters
Main Frame Words - 31,32
End Fill (per 96 frames) - 0 Characters
396 characters per 96 Main Frames
7920 characters per Record
135 files per tape MAXIMUM

EXPERIMENTER 63 - GSFC(Neupert) - 800 BPI N=6

Time 1 + Time 2(every 96 frames) - 12 Characters
Main Frame Words - 1,2,6,9,10,17,22,30, S
End Fill (per 96 frames) - 0 Characters
1740 characters per 96 Main Frames
10440 characters per Record
70 files per tape MAXIMUM

EXPERIMENTER 64 - GSFC(Schmidt) - 800 BPI N=25

Time 1 + Time 2(every 96 frames) - 12 Characters
Main Frame Words 29,26,25
End Fill (per 96 frames) - 0 Characters
588 characters per 96 Main Frames
17400 characters per Record
200 files per tape MAXIMUM

Main Frame Data Tape Formats (Continued)

EXPERIMENTER 65 - London - 800 BPI N=2

Time 1 + Time 2 (every 96 frames) - 12 Characters
Main Frame Words - 11,12,13,14,4,5,25,29
End Fill (per 96 frames) - 0 Characters
1548 characters per 96 Main Frames
3096 characters per Record
80 files per tape MAXIMUM

EXPERIMENTER 66 - Minnesota - 556 BPI N=1

Time 1 + Time 2(every 96 frames) - 20 Characters
Main Frame Words - 1,2,4,5,6,7,8,9,10,11,12,13,14,15,17,20,21,22,
23,24,27,30
End Fill (per 96 frames) - 16 Characters
4260 characters per 96 Main Frames
4260 characters per 96 Main Frames
35 files per tape MAXIMUM

EXPERIMENTER 67 - NRL(Tousey) - 800 BPI N=1

Time 1 + Time 2(every 96 frames) - 16 Characters
Main Frame Words - 4,5,7,8,20,21,23,24,17
End Fill (per 96 frames) - 8 Characters
1752 characters per 96 Main Frames
1752 characters per Record
70 files per tape MAXIMUM

EXPERIMENTER 68 - Paris - 800 BPI N=10

Time 1 + Time 2(every 96 frames) - 12 Characters
Main Frame Words - 28,29
End Fill (per 96 frames) - 0 Characters
396 characters per 96 Main Frames
3960 characters per Record
200 files per tape MAXIMUM

EXPERIMENTER 69 - NRL (Chubb) - BPI N= No MDT

EXPERIMENTER 70 - BBRC - 800 BPI N=4

Time 1 + Time 2 (every 96 frames) - 12 Characters
Main Frame Words - 25,26,29
End Fill (per 96 frames) - 0 Characters
588 characters per 96 Main Frames
2352 characters per Record
115 files per tape MAXIMUM

Correlated Data Tape Formats

EXPERIMENTER 60 - Colorado - 556 BPI

Time Field Lengths	10	Characters
Digital Words	9,36,37,41,S,S	
DSM Record Lengths	750	Characters
Wheel Words	1,2,3,4,5,8,10,14,19,21,40,S,S,S,S	
Wheel Record Lengths	1290	Characters
Sail Words	None	
Sail Record Lengths	N.A.	Characters

EXPERIMENTER 61 - GSFC(Frost) - 800 BPI

Time Field Lengths	6	Characters
Digital Words	1,4,7,8,15,23,27,29,31,37,39,43,44,47,S,S,S,S	
DSM Record Lengths	1410	Characters
Wheel Words	27,32,36	
Wheel Record Lengths	546	Characters
Sail Words	None	
Sail Record Lengths	N.A.	Characters

EXPERIMENTER 63 - GSFC(Neupert) - 800 PBI

Time Field Lengths	6	Characters
Digital Words	3,9,S	
DSM Record Lengths	330	Characters
Wheel Words	None	
Wheel Record Lengths	N.A.	Characters
Sail Words	5,6,8,9,44	
Sail Record Lengths	762	Characters

EXPERIMENTER 64 - GSFC(Schmidt) - 800 BPI

Time Field Lengths	6	Characters
Digital Words	1-48	
DSM Record Lengths	3570	Characters
Wheel Words	1-48	
Wheel Record Lengths	3570	Characters
Sail Words	1-48	
Sail Record Lengths	3570	Characters

EXPERIMENTER 65 - London - 800 BPI

Time Field Lengths	N.A.	Characters
Digital Words	None	
DSM Record Lengths	N.A.	Characters
Wheel Words	None	
Wheel Record Lengths	N.A.	Characters
Sail Words	None	
Sail Record Lengths	N.A.	Characters

EXPERIMENTER 66 - Minnesota - 556 BPI

Time Field Lengths	10	Characters
Digital Words	12,13,16,S,S	
DSM Record Lengths	570	Characters
Wheel Words	6,7,17,22,23,31,38,39,S,S	
Wheel Record Lengths	930	Characters
Sail Words	None	
Sail Record Lengths	N.A.	Characters

EXPERIMENTER 67 - NRL(Tousey) - 800 BPI

Time Field Lengths	8	Characters
Digital Words	None	
DSM Record Lengths	N.A.	Characters
Wheel Words	None	
Wheel Record Lengths	N.A.	Characters
Sail Words	1,2,3,4,7,11,12,15,16,17,18,19,22,23,24,25,36,38,43, 44,46,S,S	
Sail Record Lengths	1896	Characters

EXPERIMENTER 68 - Paris - 800 BPI

Time Field Lengths	6	Characters
Digital Words	None	
DSM Record Lengths	N.A.	Characters
Wheel Words	13,20,26,30,S,S	
Wheel Record Lengths	546	Characters
Sail Words	None	
Sail Record Lengths	N.A.	Characters

EXPERIMENTER 69 - NRL(Chubb) - 800 BPI

Time Field Lengths	6	Characters
Digital Words	17,20,21,24,25,37,47,S,S	
DSM Record Lengths	762	Characters
Wheel Words	None	
Wheel Record Lengths	N.A.	Characters
Sail Words	None	
Sail Record Lengths	N.A.	Characters

FILE 0001 REC 0001 CH 7500

D-16202
Run 17-2

5/20/69
to
5/21/69

OSO-5

0001	111212060106	111201061207	021112011203	010412111110	010311041202	120405040503	010312121212	120112011105
0049	111212060106	111201061207	021112011203	010412111110	010311041202	120405040503	010312121212	120112011105
0097	111212060106	111201061207	021112011203	010412111110	010311041202	120405040503	010312121212	120112011105
0145	111212060106	111201061207	021112011203	010412111110	010311041202	120405040503	010312121212	120112011105
0193	111212060106	111201061207	021112011203	010412111110	010311041202	120405040503	010312121212	120112011105
0241	111212060106	111201061207	021112011203	010412111110	010311041202	120405040503	010312121212	120112011105
0289	111212060106	111201061207	021112011203	010412111110	010311041202	120405040503	010312121212	120112011105
0337	111212060106	111201061207	021112011203	010412111110	010311041202	120405040503	010312121212	120112011105
0385	111212060106	111201061207	021112011203	010412111110	010311041202	120405040503	010312121212	120112011105
0433	111212060106	111201061207	021112011203	010412111110	010311041202	120405040503	010312121212	120112011105
0481	111212060106	111201061207	021112011203	010412111110	010311041202	120405040503	010312121212	120112011105
0529	111212060106	111201061207	021112011203	010412111110	010311041202	120405040503	010312121212	120112011105
0577	111212060106	111201061207	021112011203	010412111110	010311041202	120405040503	010312121212	120112011105
0625	111212060106	111201061207	021112011203	010412111110	010311041202	120405040503	010312121212	120112011105
0673	111212060106	111201061207	021112011203	010412111110	010311041202	120405040503	010312121212	120112011105
0721	111212060106	111201061207	021112011203	010412111110	010311041202	120405040503	010312121212	120112011105
0769	111212060106	111201061207	021112011203	010412111110	010311041202	120405040503	010312121212	120112011105
0817	111212060106	111201061207	021112011203	010412111110	010311041202	120405040503	010312121212	120112011105
0865	111212060106	111201061207	021112011203	010412111110	010311041202	120405040503	010312121212	120112011105
0913	111212060106	111201061207	021112011203	010412111110	010311041202	120405040503	010312121212	120112011105
0961	111212060106	111201061207	021112011203	010412111110	010311041202	120405040503	010312121212	120112011105
1009	111212060106	111201061207	021112011203	010412111110	010311041202	120405040503	010312121212	120112011105
1057	111212060106	111201061207	021112011203	010412111110	010311041202	120405040503	010312121212	120112011105
1105	111212060106	111201061207	021112011203	010412111110	010311041202	120405040503	010312121212	120112011105
1153	111212060106	111201061207	021112011203	010412111110	010311041202	120405040503	010312121212	120112011105
1201	111212060106	111201061207	021112011203	010412111110	010311041202	120405040503	010312121212	120112011105
1249	111212060106	111201061207	021112011203	010412111110	010311041202	120405040503	010312121212	120112011105
1297	111212060106	111201061207	021112011203	010412111110	010311041202	120405040503	010312121212	120112011105
1345	111212060106	111201061207	021112011203	010412111110	010311041202	120405040503	010312121212	120112011105
1393	111212060106	111201061207	021112011203	010412111110	010311041202	120405040503	010312121212	120112011105
1441	111212060106	111201061207	021112011203	010412111110	010311041202	120405040503	010312121212	120112011105
1489	111212060106	111201061207	021112011203	010412111110	010311041202	120405040503	010312121212	120112011105
1537	111212060106	111201061207	021112011203	010412111110	010311041202	120405040503	010312121212	120112011105
1585	111212060106	111201061207	021112011203	010412111110	010311041202	120405040503	010312121212	120112011105
1633	111212060106	111201061207	021112011203	010412111110	010311041202	120405040503	010312121212	120112011105
1681	111212060106	111201061207	021112011203	010412111110	010311041202	120405040503	010312121212	120112011105
1729	111212060106	111201061207	021112011203	010412111110	010311041202	120405040503	010312121212	120112011105
1777	111212060106	111201061207	021112011203	010412111110	010311041202	120405040503	010312121212	120112011105
1825	111212060106	111201061207	021112011203	010412111110	010311041202	120405040503	010312121212	120112011105
1873	111212060106	111201061207	021112011203	010412111110	010311041202	120405040503	010312121212	120112011105
1921	111212060106	111201061207	021112011203	010412111110	010311041202	120405040503	010312121212	120112011105
1969	111212060106	111201061207	021112011203	010412111110	010311041202	120405040503	010312121212	120112011105
2017	111212060106	111201061207	021112011203	010412111110	010311041202	120405040503	010312121212	120112011105
2065	111212060106	111201061207	021112011203	010412111110	010311041202	120405040503	010312121212	120112011105
2113	111212060106	111201061207	021112011203	010412111110	010311041202	120405040503	010312121212	120112011105
2161	111212060106	111201061207	021112011203	010412111110	010311041202	120405040503	010312121212	120112011105
2209	111212060106	111201061207	021112011203	010412111110	010311041202	120405040503	010312121212	120112011105
2257	111212060106	111201061207	021112011203	010412111110	010311041202	120405040503	010312121212	120112011105
2305	111212060106	111201061207	021112011203	010412111110	010311041202	120405040503	010312121212	120112011105
2353	111212060106	111201061207	021112011203	010412111110	010311041202	120405040503	010312121212	120112011105
2401	111212060106	111201061207	021112011203	010412111110	010311041202	120405040503	010312121212	120112011105
2449	111212060106	111201061207	021112011203	010412111110	010311041202	120405040503	010312121212	120112011105
2497	111212060106	111201061207	021112011203	010412111110	010311041202	120405040503	010312121212	120112011105
2545	111212060106	111201061207	021112011203	010412111110	010311041202	120405040503	010312121212	120112011105
2593	111212060106	111201061207	021112011203	010412111110	010311041202	120405040503	010312121212	120112011105
2641	111212060106	111201061207	021112011203	010412111110	010311041202	120405040503	010312121212	120112011105
2689	111212060106	111201061207	021112011203	010412111110	010311041202	120405040503	010312121212	120112011105
2737	111212060106	111201061207	021112011203	010412111110	010311041202	120405040503	010312121212	120112011105
2785	111212060106	111201061207	021112011203	010412111110	010311041202	120405040503	010312121212	120112011105
2833	111212060106	111201061207	021112011203	010412111110	010311041202	120405040503	010312121212	120112011105
2881	111212060106	111201061207	021112011203	010412111110	010311041202	120405040503	010312121212	120112011105
2929	111212060106	111201061207	021112011203	010412111110	010311041202	120405040503	010312121212	120112011105

FILE 0001 REC 0001 CH 7500

2977	111212060106	111201061207	021112011203	010412111110	010311041202	120405040503	010312121212	120112011105
3025	111212060106	111201061207	021112011203	010412111110	010311041202	120405040503	010312121212	120112011105
3073	111212060106	111201061207	021112011203	010412111110	010311041202	120405040503	010312121212	120112011105
3121	111212060106	111201061207	021112011203	010412111110	010311041202	120405040503	010312121212	120112011105
3169	111212060106	111201061207	021112011203	010412111110	010311041202	120405040503	010312121212	120112011105
3217	111212060106	111201061207	021112011203	010412111110	010311041202	120405040503	010312121212	120112011105
3265	111212060106	111201061207	021112011203	010412111110	010311041202	120405040503	010312121212	120112011105
3313	111212060106	111201061207	021112011203	010412111110	010311041202	120405040503	010312121212	120112011105
3361	111212060106	111201061207	021112011203	010412111110	010311041202	120405040503	010312121212	120112011105
3409	111212060106	111201061207	021112011203	010412111110	010311041202	120405040503	010312121212	120112011105
3457	111212060106	111201061207	021112011203	010412111110	010311041202	120405040503	010312121212	120112011105
3505	111212060106	111201061207	021112011203	010412111110	010311041202	120405040503	010312121212	120112011105
3553	111212060106	111201061207	021112011203	010412111110	010311041202	120405040503	010312121212	120112011105
3601	111212060106	111201061207	021112011203	010412111110	010311041202	120405040503	010312121212	120112011105
3649	111212060106	111201061207	021112011203	010412111110	010311041202	120405040503	010312121212	120112011105
3697	111212060106	111201061207	021112011203	010412111110	010311041202	120405040503	010312121212	120112011105
3745	111212060106	111201061207	021112011203	010412111110	010311041202	120405040503	010312121212	120112011105
3793	111212060106	111201061207	021112011203	010412111110	010311041202	120405040503	010312121212	120112011105
3841	111212060106	111201061207	021112011203	010412111110	010311041202	120405040503	010312121212	120112011105
3889	111212060106	111201061207	021112011203	010412111110	010311041202	120405040503	010312121212	120112011105
3937	111212060106	111201061207	021112011203	010412111110	010311041202	120405040503	010312121212	120112011105
3985	111212060106	111201061207	021112011203	010412111110	010311041202	120405040503	010312121212	120112011105
4033	111212060106	111201061207	021112011203	010412111110	010311041202	120405040503	010312121212	120112011105
4081	111212060106	111201061207	021112011203	010412111110	010311041202	120405040503	010312121212	120112011105
4129	111212060106	111201061207	021112011203	010412111110	010311041202	120405040503	010312121212	120112011105
4177	111212060106	111201061207	021112011203	010412111110	010311041202	120405040503	010312121212	120112011105
4225	111212060106	111201061207	021112011203	010412111110	010311041202	120405040503	010312121212	120112011105
4273	111212060106	111201061207	021112011203	010412111110	010311041202	120405040503	010312121212	120112011105
4321	111212060106	111201061207	021112011203	010412111110	010311041202	120405040503	010312121212	120112011105
4369	111212060106	111201061207	021112011203	010412111110	010311041202	120405040503	010312121212	120112011105
4417	111212060106	111201061207	021112011203	010412111110	010311041202	120405040503	010312121212	120112011105
4465	111212060106	111201061207	021112011203	010412111110	010311041202	120405040503	010312121212	120112011105
4513	111212060106	111201061207	021112011203	010412111110	010311041202	120405040503	010312121212	120112011105
4561	111212060106	111201061207	021112011203	010412111110	010311041202	120405040503	010312121212	120112011105
4609	111212060106	111201061207	021112011203	010412111110	010311041202	120405040503	010312121212	120112011105
4657	111212060106	111201061207	021112011203	010412111110	010311041202	120405040503	010312121212	120112011105
4705	111212060106	111201061207	021112011203	010412111110	010311041202	120405040503	010312121212	120112011105
4753	111212060106	111201061207	021112011203	010412111110	010311041202	120405040503	010312121212	120112011105
4801	111212060106	111201061207	021112011203	010412111110	010311041202	120405040503	010312121212	120112011105
4849	111212060106	111201061207	021112011203	010412111110	010311041202	120405040503	010312121212	120112011105
4897	111212060106	111201061207	021112011203	010412111110	010311041202	120405040503	010312121212	120112011105
4945	111212060106	111201061207	021112011203	010412111110	010311041202	120405040503	010312121212	120112011105
4993	111212060106	111201061207	021112011203	010412111110	010311041202	120405040503	010312121212	120112011105
5041	111212060106	111201061207	021112011203	010412111110	010311041202	120405040503	010312121212	120112011105
5089	111212060106	111201061207	021112011203	010412111110	010311041202	120405040503	010312121212	120112011105
5137	111212060106	111201061207	021112011203	010412111110	010311041202	120405040503	010312121212	120112011105
5185	111212060106	111201061207	021112011203	010412111110	010311041202	120405040503	010312121212	120112011105
5233	111212060106	111201061207	021112011203	010412111110	010311041202	120405040503	010312121212	120112011105
5281	111212060106	111201061207	021112011203	010412111110	010311041202	120405040503	010312121212	120112011105
5329	111212060106	111201061207	021112011203	010412111110	010311041202	120405040503	010312121212	120112011105
5377	111212060106	111201061207	021112011203	010412111110	010311041202	120405040503	010312121212	120112011105
5425	111212060106	111201061207	021112011203	010412111110	010311041202	120405040503	010312121212	120112011105
5473	111212060106	111201061207	021112011203	010412111110	010311041202	120405040503	010312121212	120112011105
5521	111212060106	111201061207	021112011203	010412111110	010311041202	120405040503	010312121212	120112011105
5569	111212060106	111201061207	021112011203	010412111110	010311041202	120405040503	010312121212	120112011105
5617	111212060106	111201061207	021112011203	010412111110	010311041202	120405040503	010312121212	120112011105
5665	111212060106	111201061207	021112011203	010412111110	010311041202	120405040503	010312121212	120112011105
5713	111212060106	111201061207	021112011203	010412111110	010311041202	120405040503	010312121212	120112011105
5761	111212060106	111201061207	021112011203	010412111110	010311041202	120405040503	010312121212	120112011105
5809	111212060106	111201061207	021112011203	010412111110	010311041202	120405040503	010312121212	120112011105
5857	111212060106	111201061207	021112011203	010412111110	010311041202	120405040503	010312121212	120112011105
5905	111212060106	111201061207	021112011203	010412111110	010311041202	120405040503	010312121212	120112011105

FILE 0025 REC 0001 CH 7500

0001	111212060106	111202011205	030212011207	010401111110	011004020707	121203110210	010312121212	120512011107
0049	111212060106	111202011205	030212011207	010401111110	011004020707	121203110210	010312121212	120512011107
0097	111212060106	111202011205	030212011207	010401111110	011004020707	121203110210	010312121212	120512011107
0145	111212060106	111202011205	030212011207	010401111110	011004020707	121203110210	010312121212	120512011107
0193	111212060106	111202011205	030212011207	010401111110	011004020707	121203110210	010312121212	120512011107
0241	111212060106	111202011205	030212011207	010401111110	011004020707	121203110210	010312121212	120512011107
0289	111212060106	111202011205	030212011207	010401111110	011004020707	121203110210	010312121212	120512011107
0337	111212060106	111202011205	030212011207	010401111110	011004020707	121203110210	010312121212	120512011107
0385	111212060106	111202011205	030212011207	010401111110	011004020707	121203110210	010312121212	120512011107
0433	111212060106	111202011205	030212011207	010401111110	011004020707	121203110210	010312121212	120512011107
0481	111212060106	111202011205	030212011207	010401111110	011004020707	121203110210	010312121212	120512011107
0529	111212060106	111202011205	030212011207	010401111110	011004020707	121203110210	010312121212	120512011107
0577	111212060106	111202011205	030212011207	010401111110	011004020707	121203110210	010312121212	120512011107
0625	111212060106	111202011205	030212011207	010401111110	011004020707	121203110210	010312121212	120512011107
0673	111212060106	111202011205	030212011207	010401111110	011004020707	121203110210	010312121212	120512011107
0721	111212060106	111202011205	030212011207	010401111110	011004020707	121203110210	010312121212	120512011107
0769	111212060106	111202011205	030212011207	010401111110	011004020707	121203110210	010312121212	120512011107
0817	111212060106	111202011205	030212011207	010401111110	011004020707	121203110210	010312121212	120512011107
0865	111212060106	111202011205	030212011207	010401111110	011004020707	121203110210	010312121212	120512011107
0913	111212060106	111202011205	030212011207	010401111110	011004020707	121203110210	010312121212	120512011107
0961	111212060106	111202011205	030212011207	010401111110	011004020707	121203110210	010312121212	120512011107
1009	111212060106	111202011205	030212011207	010401111110	011004020707	121203110210	010312121212	120512011107
1057	111212060106	111202011205	030212011207	010401111110	011004020707	121203110210	010312121212	120512011107
1105	111212060106	111202011205	030212011207	010401111110	011004020707	121203110210	010312121212	120512011107
1153	111212060106	111202011205	030212011207	010401111110	011004020707	121203110210	010312121212	120512011107
1201	111212060106	111202011205	030212011207	010401111110	011004020707	121203110210	010312121212	120512011107
1249	111212060106	111202011205	030212011207	010401111110	011004020707	121203110210	010312121212	120512011107
1297	111212060106	111202011205	030212011207	010401111110	011004020707	121203110210	010312121212	120512011107
1345	111212060106	111202011205	030212011207	010401111110	011004020707	121203110210	010312121212	120512011107
1393	111212060106	111202011205	030212011207	010401111110	011004020707	121203110210	010312121212	120512011107
1441	111212060106	111202011205	030212011207	010401111110	011004020707	121203110210	010312121212	120512011107
1489	111212060106	111202011205	030212011207	010401111110	011004020707	121203110210	010312121212	120512011107
1537	111212060106	111202011205	030212011207	010401111110	011004020707	121203110210	010312121212	120512011107
1585	111212060106	111202011205	030212011207	010401111110	011004020707	121203110210	010312121212	120512011107
1633	111212060106	111202011205	030212011207	010401111110	011004020707	121203110210	010312121212	120512011107
1681	111212060106	111202011205	030212011207	010401111110	011004020707	121203110210	010312121212	120512011107
1729	111212060106	111202011205	030212011207	010401111110	011004020707	121203110210	010312121212	120512011107
1777	111212060106	111202011205	030212011207	010401111110	011004020707	121203110210	010312121212	120512011107
1825	111212060106	111202011205	030212011207	010401111110	011004020707	121203110210	010312121212	120512011107
1873	111212060106	111202011205	030212011207	010401111110	011004020707	121203110210	010312121212	120512011107
1921	111212060106	111202011205	030212011207	010401111110	011004020707	121203110210	010312121212	120512011107
1969	111212060106	111202011205	030212011207	010401111110	011004020707	121203110210	010312121212	120512011107
2017	111212060106	111202011205	030212011207	010401111110	011004020707	121203110210	010312121212	120512011107
2065	111212060106	111202011205	030212011207	010401111110	011004020707	121203110210	010312121212	120512011107
2113	111212060106	111202011205	030212011207	010401111110	011004020707	121203110210	010312121212	120512011107
2161	111212060106	111202011205	030212011207	010401111110	011004020707	121203110210	010312121212	120512011107
2209	111212060106	111202011205	030212011207	010401111110	011004020707	121203110210	010312121212	120512011107
2257	111212060106	111202011205	030212011207	010401111110	011004020707	121203110210	010312121212	120512011107
2305	111212060106	111202011205	030212011207	010401111110	011004020707	121203110210	010312121212	120512011107
2353	111212060106	111202011205	030212011207	010401111110	011004020707	121203110210	010312121212	120512011107
2401	111212060106	111202011205	030212011207	010401111110	011004020707	121203110210	010312121212	120512011107
2449	111212060106	111202011205	030212011207	010401111110	011004020707	121203110210	010312121212	120512011107
2497	111212060106	111202011205	030212011207	010401111110	011004020707	121203110210	010312121212	120512011107
2545	111212060106	111202011205	030212011207	010401111110	011004020707	121203110210	010312121212	120512011107
2593	111212060106	111202011205	030212011207	010401111110	011004020707	121203110210	010312121212	120512011107
2641	111212060106	111202011205	030212011207	010401111110	011004020707	121203110210	010312121212	120512011107
2689	111212060106	111202011205	030212011207	010401111110	011004020707	121203110210	010312121212	120512011107
2737	111212060106	111202011205	030212011207	010401111110	011004020707	121203110210	010312121212	120512011107
2785	111212060106	111202011205	030212011207	010401111110	011004020707	121203110210	010312121212	120512011107
2833	111212060106	111202011205	030212011207	010401111110	011004020707	121203110210	010312121212	120512011107
2881	111212060106	111202011205	030212011207	010401111110	011004020707	121203110210	010312121212	120512011107
2929	111212060106	111202011205	030212011207	010401111110	011004020707	121203110210	010312121212	120512011107

FILE 0025 REC 0001 CH 7500

2977	111212060106	111202011205	030212011207	010401111110	011004020707	121203110210	010312121212	120512011107
3025	111212060106	111202011205	030212011207	010401111110	011004020707	121203110210	010312121212	120512011107
3073	111212060106	111202011205	030212011207	010401111110	011004020707	121203110210	010312121212	120512011107
3121	111212060106	111202011205	030212011207	010401111110	011004020707	121203110210	010312121212	120512011107
3169	111212060106	111202011205	030212011207	010401111110	011004020707	121203110210	010312121212	120512011107
3217	111212060106	111202011205	030212011207	010401111110	011004020707	121203110210	010312121212	120512011107
3265	111212060106	111202011205	030212011207	010401111110	011004020707	121203110210	010312121212	120512011107
3313	111212060106	111202011205	030212011207	010401111110	011004020707	121203110210	010312121212	120512011107
3361	111212060106	111202011205	030212011207	010401111110	011004020707	121203110210	010312121212	120512011107
3409	111212060106	111202011205	030212011207	010401111110	011004020707	121203110210	010312121212	120512011107
3457	111212060106	111202011205	030212011207	010401111110	011004020707	121203110210	010312121212	120512011107
3505	111212060106	111202011205	030212011207	010401111110	011004020707	121203110210	010312121212	120512011107
3553	111212060106	111202011205	030212011207	010401111110	011004020707	121203110210	010312121212	120512011107
3601	111212060106	111202011205	030212011207	010401111110	011004020707	121203110210	010312121212	120512011107
3649	111212060106	111202011205	030212011207	010401111110	011004020707	121203110210	010312121212	120512011107
3697	111212060106	111202011205	030212011207	010401111110	011004020707	121203110210	010312121212	120512011107
3745	111212060106	111202011205	030212011207	010401111110	011004020707	121203110210	010312121212	120512011107
3793	111212060106	111202011205	030212011207	010401111110	011004020707	121203110210	010312121212	120512011107
3841	111212060106	111202011205	030212011207	010401111110	011004020707	121203110210	010312121212	120512011107
3889	111212060106	111202011205	030212011207	010401111110	011004020707	121203110210	010312121212	120512011107
3937	111212060106	111202011205	030212011207	010401111110	011004020707	121203110210	010312121212	120512011107
3985	111212060106	111202011205	030212011207	010401111110	011004020707	121203110210	010312121212	120512011107
4033	111212060106	111202011205	030212011207	010401111110	011004020707	121203110210	010312121212	120512011107
4081	111212060106	111202011205	030212011207	010401111110	011004020707	121203110210	010312121212	120512011107
4129	111212060106	111202011205	030212011207	010401111110	011004020707	121203110210	010312121212	120512011107
4177	111212060106	111202011205	030212011207	010401111110	011004020707	121203110210	010312121212	120512011107
4225	111212060106	111202011205	030212011207	010401111110	011004020707	121203110210	010312121212	120512011107
4273	111212060106	111202011205	030212011207	010401111110	011004020707	121203110210	010312121212	120512011107
4321	111212060106	111202011205	030212011207	010401111110	011004020707	121203110210	010312121212	120512011107
4369	111212060106	111202011205	030212011207	010401111110	011004020707	121203110210	010312121212	120512011107
4417	111212060106	111202011205	030212011207	010401111110	011004020707	121203110210	010312121212	120512011107
4465	111212060106	111202011205	030212011207	010401111110	011004020707	121203110210	010312121212	120512011107
4513	111212060106	111202011205	030212011207	010401111110	011004020707	121203110210	010312121212	120512011107
4561	111212060106	111202011205	030212011207	010401111110	011004020707	121203110210	010312121212	120512011107
4609	111212060106	111202011205	030212011207	010401111110	011004020707	121203110210	010312121212	120512011107
4657	111212060106	111202011205	030212011207	010401111110	011004020707	121203110210	010312121212	120512011107
4705	111212060106	111202011205	030212011207	010401111110	011004020707	121203110210	010312121212	120512011107
4753	111212060106	111202011205	030212011207	010401111110	011004020707	121203110210	010312121212	120512011107
4801	111212060106	111202011205	030212011207	010401111110	011004020707	121203110210	010312121212	120512011107
4849	111212060106	111202011205	030212011207	010401111110	011004020707	121203110210	010312121212	120512011107
4897	111212060106	111202011205	030212011207	010401111110	011004020707	121203110210	010312121212	120512011107
4945	111212060106	111202011205	030212011207	010401111110	011004020707	121203110210	010312121212	120512011107
4993	111212060106	111202011205	030212011207	010401111110	011004020707	121203110210	010312121212	120512011107
5041	111212060106	111202011205	030212011207	010401111110	011004020707	121203110210	010312121212	120512011107
5089	111212060106	111202011205	030212011207	010401111110	011004020707	121203110210	010312121212	120512011107
5137	111212060106	111202011205	030212011207	010401111110	011004020707	121203110210	010312121212	120512011107
5185	111212060106	111202011205	030212011207	010401111110	011004020707	121203110210	010312121212	120512011107
5233	111212060106	111202011205	030212011207	010401111110	011004020707	121203110210	010312121212	120512011107
5281	111212060106	111202011205	030212011207	010401111110	011004020707	121203110210	010312121212	120512011107
5329	111212060106	111202011205	030212011207	010401111110	011004020707	121203110210	010312121212	120512011107
5377	111212060106	111202011205	030212011207	010401111110	011004020707	121203110210	010312121212	120512011107
5425	111212060106	111202011205	030212011207	010401111110	011004020707	121203110210	010312121212	120512011107
5473	111212060106	111202011205	030212011207	010401111110	011004020707	121203110210	010312121212	120512011107
5521	111212060106	111202011205	030212011207	010401111110	011004020707	121203110210	010312121212	120512011107
5569	111212060106	111202011205	030212011207	010401111110	011004020707	121203110210	010312121212	120512011107
5617	111212060106	111202011205	030212011207	010401111110	011004020707	121203110210	010312121212	120512011107
5665	111212060106	111202011205	030212011207	010401111110	011004020707	121203110210	010312121212	120512011107
5713	111212060106	111202011205	030212011207	010401111110	011004020707	121203110210	010312121212	120512011107
5761	111212060106	111202011205	030212011207	010401111110	011004020707	121203110210	010312121212	120512011107
5809	111212060106	111202011205	030212011207	010401111110	011004020707	121203110210	010312121212	120512011107
5857	111212060106	111202011205	030212011207	010401111110	011004020707	121203110210	010312121212	120512011107
5905	111212060106	111202011205	030212011207	010401111110	011004020707	121203110210	010312121212	120512011107