#251
(1 of 2)

EXPLORER 34

2.5 SEC.OND MAGNETIC FIELD VECTORS

67-051A-11D

EXPLORER 34

2.5 SECOND MAGNETIC FIELD VECTORS

67-051A-11D

THIS DATA SET HAS BEEN RESTORED. ORIGINALLY IT CONTAINED 136 9-TRACK, 800 BPI TAPES WRITTEN IN BINARY. THERE ARE 20 RESTORED TAPES. THE DR AND DS TAPES ARE 9-TRACK, 6250 BPI. THE ORIGINAL TAPES WERE CREATED ON AN IBM 360 COMPUTER. THE DR AND DS NUMBERS ALONG WITH THE CORRESPONDING D NUMBERS AND THE TIME SPANS ARE AS FOLLOWS:

DR#	DS#	D#	FILES	TIME SPAN
DR01640	DS01640	D12944	1	05/24/67 - 05/28/67
		D12945	2	05/28/67 - 06/02/67
		D12946	3	06/02/67 - 06/06/67
		D12947	4	06/06/67 - 06/10/67
		D12948	5	06/10/67 - 06/15/67
		D12949	6	06/15/67 - 06/19/67
		D12950	7	06/19/67 - 06/23/67
DR01641	DS01641	D12951	1	06/23/67 - 06/28/67
		D12952	2	06/28/67 - 07/02/67
		D12953	3	07/02/67 - 07/06/67
		D12954	4	07/06/67 - 07/11/67
		D12955	5	07/11/67 - 07/15/67
		D12956	6	07/15/67 - 07/19/67
		D12957	7	07/19/67 - 07/24/67
DR01642	DS01642	D12958	1	07/24/67 - 07/28/67
		D12959	2	07/28/67 - 08/01/67
		D12960	3	08/01/67 - 08/06/67
		D12961	4	08/06/67 - 08/10/67
		D12962	5	08/10/67 - 08/14/67
		D12963	6	08/14/67 - 08/19/67
		D12964	7	08/19/67 - 08/23/67
DR01643	DS01643	D12965	1	08/23/67 - 08/27/67 (a)
		D12966	2	08/27/67 - 09/01/67
		D12967	3	09/01/67 - 09/05/67
		D12968	4	09/05/67 - 09/09/67
		D12969	5	09/09/67 - 09/14/67
		D12970	6	09/14/67 - 09/18/67
		D12971	7	09/18/67 - 09/22/67
		D12972	8	09/22/67 - 09/27/67
		D12973	9	09/27/67 - 10/01/67

DR#	DS#	D#	FILES	TIME SPAN
DR01644	DS01644	D12974	1	10/01/67 - 10/05/67
		D12975	2	10/05/67 - 10/10/67
		D12976	3	10/10/67 - 10/14/67
		D12977	4	10/14/67 - 10/18/67
		D12978	5	10/18/67 - 10/23/67
		D12979	6	10/23/67 - 10/27/67
		D12980	7	10/27/67 - 10/31/67
DR01645	DS01645	D12981	1	10/31/67 - 11/05/67
		D12982	2	11/07/67 - 11/09/67
		D12983	3	11/09/67 - 11/13/67
		D12984	4	11/13/67 - 11/18/67
		D12985	5	11/18/67 - 11/22/67
		D12986	6	11/22/67 - 11/26/67
		D12987	7	11/26/67 - 12/01/67
DR01646	DS01646	D12988	1	12/01/67 - 12/05/67
		D12989	2	12/05/67 - 12/09/67
		D12990	3	12/09/67 - 12/12/67
		D12991	4	12/12/67 - 12/18/67
		D12992	5	12/18/67 - 12/22/67
		D12993	6	12/22/67 - 12/26/67
		D13103	7	12/26/67 - 12/31/67
DR01647	DS01647	D13104	1	01/04/68 - 01/08/68
		D13105	2	01/08/68 - 01/13/68
		D13106	3	01/13/68 - 01/17/68
		D13107	4	01/17/68 - 01/21/68
		D13108	5	01/21/68 - 01/26/68
		D13109	6	02/04/68 - 02/08/68
		D13110	7	02/08/68 - 02/12/68
DR01648	DS01648	D13111	1	02/12/68 - 02/16/68
		D13112	2	02/16/68 - 02/21/68
		D13113	3	02/21/68 - 02/25/68
		D13114	4	02/25/68 - 02/29/68
		D13115	5	02/29/68 - 03/05/68
		D13116	6	03/05/68 - 03/09/68
		D13117	7	03/17/68 - 03/21/68
DR01649	DS01649	D13118	1	03/26/68 - 03/30/68
		D13119	2	03/31/68 - 04/04/68
		D13120	3	04/04/68 - 04/08/68
		D13121	4	04/08/68 - 04/13/68
		D13122	5	04/17/68 - 04/21/68
		D13123	6	04/21/68 - 04/26/68
		D13124	7	04/26/68 - 04/30/68
DR01650	DS01650	D13125	1	04/30/68 - 05/04/68
		D13126	2	05/04/68 - 05/09/68
		D13127	3	05/09/68 - 05/13/68
		D13461	4	05/13/68 - 05/17/68
		D13462	5	05/17/68 - 05/22/68
		D13463	6	05/22/68 - 05/26/68
		D13464	7	05/26/68 - 05/30/68

DR#	DS#	D#	FILES	TIME SPAN
DR01651	DS01651	D13465	1	05/30/68 - 06/04/68
		D13466	2	06/04/68 - 06/08/68
		D13467	3	06/08/68 - 06/12/68
		D13468	4	06/12/68 - 06/17/68
		D13469	5	06/17/68 - 06/21/68
		D13470	6	06/21/68 - 06/25/68
		D13471	7	06/25/68 - 06/30/68
DR01652	DS01652	D13472	1	06/30/68 - 07/04/68
		D13473	2	07/04/68 - 07/08/68
		D13474	3	07/08/68 - 07/13/68
		D13475	4	07/13/68 - 07/17/68
		D13476	5	07/17/68 - 07/21/68
		D13477	6	07/21/68 - 07/26/68
		D13478	7	07/26/68 - 07/30/68
DR01653	DS01653	D13479	1	07/30/68 - 08/03/68
		D13480	2	08/03/68 - 08/08/68
		D13481	3	08/08/68 - 08/12/68
		D13482	4	08/12/68 - 08/15/68
		D13483	5	08/15/68 - 08/20/68
		D13484	6	08/20/68 - 08/25/68
		D13485	7	08/25/68 - 08/29/68
DR01654	DS01654	D13486	1	08/29/68 - 09/02/68
		D13487	2	09/02/68 - 09/07/68
		D13488	3	09/07/68 - 09/11/68
		D13489	4	09/11/68 - 09/15/68
		D13490	5	09/15/68 - 09/20/68
		D13491	6	09/20/68 - 09/24/68
		D13492	7	09/24/68 - 09/28/68
DR01655	DS01655	D13493	1	09/28/68 - 10/03/68
		D13494	2	10/03/68 - 10/07/68
		D13495	3	10/07/68 - 10/11/68
		D13496	4	10/11/68 - 10/16/68
		D13497	5	10/16/68 - 10/20/68
		D13498	6	10/20/68 - 10/24/68
		D13499	7	10/29/68 - 11/02/68
DR01656	DS01656	D13500	1	11/02/68 - 11/06/68
		D13501	2	11/06/68 - 11/11/68
		D13502	3	11/11/68 - 11/15/68
		D13503	4	11/15/68 - 11/19/68
		D13504	5	11/19/68 - 11/24/68
		D13505	6	11/24/68 - 11/27/68
		D13506	7	11/27/68 - 12/02/68
DR01657	DS01657	D13507	1	12/02/68 - 12/07/68
DR01658	DS01658	D13508	1	12/11/68 - 12/15/68
		D13509	2	12/15/68 - 12/20/68
		D13510	3	12/20/68 - 12/24/68
		D13511	4	12/24/68 - 12/28/68
		D13512	5	12/28/68 - 01/02/69
		D13513	6	01/02/69 - 01/06/69
		D13514	7	01/06/69 - 01/10/69

DR#	DS#	D#	FILES	TIME SPAN
DR01659	DS01659	D13515	1	01/10/69 - 01/15/69
		D13516	2	01/15/69 - 01/19/69
		D13517	3	01/19/69 - 01/23/69
		D13518	4	01/23/69 - 01/28/69
		D13519	5	01/28/69 - 02/01/69
		D13520	6	02/01/69 - 02/05/69
		D13521	7	02/05/69 - 02/10/69

(a) DR01643 CONTAINS 9 FILES. DURING THE RESTORATION PROCESS, 2 OF THE ORIGINAL D TAPES WERE VERY DIFFICULT TO READ. ONLY PARTIAL RECORDS WERE COPIED. THOSE 2 D TAPES WERE D12965 AND 12966.

REQ. AGENT	RASH NO.	ACQ. AGENT
WTJ	RB4566	JHK

EXPLORER 34

2.5 SECOND MAGNETIC FIELD VECTORS

67-051A-11D

This data set consists of 136 800 BPI, binary tapes that were produced on an IBM/360. The tapes are 9 track and contain one file of data. The records are variable - spanned with a logical record length of 1232 bytes and a block size of 19716 bytes.

D#	C#	ORBIT #	START	STOP
D-12944	C-09681	1	5/24/67	5/28/67
D-12945	C-09682	2	5/28/67	6/02/67
D-12946	C-09683	3	6/02/67	6/06/67
D-12947	C-09684	4	6/06/67	6/10/67
D-12948	C-09685	5	6/10/67	6/15/67
D-12949	C-09686	6	6/15/67	6/19/67
D-12950	C-09687	7	6/19/67	6/23/67
D-12951	C-09688	8	6/23/67	6/28/67
D-12952	C-09698	9	6/28/67	7/02/67
D-12953	C-09690	10	7/02/67	7/06/67
D-12954	C-09691	11	7/06/67	7/11/67
D-12955	C-09692	12	7/11/67	7/15/67
D-12956	C-09693	13	7/15/67	7/19/67
D-12957	C-09694	14	7/19/67	7/24/67
D-12958	C-09695	15	7/24/67	7/28/67
D-12959	C-09696	16	7/28/67	8/01/67
D-12960	C-09697	17	8/01/67	8/06/67
D-12961	C-09698	18	8/06/67	8/10/67
D-12962	C-09699	19	8/10/67	8/14/67
D-12963	C-09700	20	8/14/67	8/19/67
D-12964	C-09701	21	8/19/67	8/23/67

D#	C#	ORBIT #	START	STOP
D-12965 •	C-09702	22	8/23/67	8/27/67
D-12966 •	C-09703	23	8/27/67	9/01/67
D-12967 •	C-09704	24	9/01/67	9/05/67
D-12968	C-09705	25	9/05/67	9/09/67
D-12969	C-09706	26	9/09/67	9/14/67
D-12970	C-09707	27	9/14/67	9/18/67
D-12971	C-09708	28	9/18/67	9/22/67
D-12972 •	C-09709	29	9/22/67	9/27/67
D-12973	C-09710	30	9/27/67	10/01/67
D-12974	C-09711	31	10/01/67	10/05/67
D-12975 •	C-09712	32	10/05/67	10/10/67
D-12976	C-09713	33	10/10/67	10/14/67
D-12977 •	C-09714	34	10/14/67	10/18/67
D-12978	C-09715	35	10/18/67	10/23/67
D-12979	C-09716	36	10/23/67	10/27/67
D-12980	C-09717	37	10/27/67	10/31/67
D-12981	C-09718	38	10/31/67	11/05/67
D-12982 •	C-09719	39	11/07/67	11/09/67
D-12983	C-09720	40	11/09/67	11/13/67
D-12984	C-09721	41	11/13/67	11/18/67
D-12985	C-09722	42	11/18/67	11/22/67
D-12986	C-09723	43	11/22/67	11/26/67
D-12987 •	C-09724	44	11/26/67	12/01/67
D-12988	C-09725	45	12/01/67	12/05/67
D-12989	C-09726	46	12/05/67	12/09/67
D-12990	C-09727	47	12/09/67	12/12/67
D-12991 •	C-09728	48	12/12/67	12/18/67
D-12992 •	C-09729	49	12/18/67	12/22/67
D-12993	C-09730	50	12/22/67	12/26/67
D-13103	C-09838	51	12/26/67	12/31/67

D#	C#	ORBIT #	START	STOP
D-13104 •	C-09839	53	1/04/68	1/08/68
D-13105	C-09840	54	1/08/68	1/13/68
D-13106	C-09841	55	1/13/68	1/17/68
D-13107	C-09842	56	1/17/68	1/21/68
D-13108	C-09843	57	1/21/68	1/26/68
D-13109	C-09844	60	2/04/68	2/08/68
D-13110	C-09845	61	2/08/68	2/12/68
D-13111	C-09846	62	2/12/68	2/16/68
D-13112	C-09847	63	2/16/68	2/21/68
D-13113	C-09848	64	2/21/68	2/25/68
D-13114	C-09849	65	2/25/68	2/29/68
D-13115	C-09850	66	2/29/68	3/05/68
D-13116 •	C-09851	67	3/05/68	3/09/68
D-13117	C-09852	70	3/17/68	3/21/68
D-13118	C-09853	72	3/26/68	3/30/68
D-13119 •	C-09854	73	3/31/68	4/04/68
D-13120	C-09855	74	4/04/68	4/08/68
D-13121	C-09856	75	4/08/68	4/13/68
D-13122 •	C-09857	77	4/17/68	4/21/68
D-13123	C-09858	78	4/21/68	4/26/68
D-13124	C-09859	79	4/26/68	4/30/68
D-13125	C-09860	80	4/30/68	5/04/68
D-13126	C-09861	81	5/04/58	5/09/68
D-13127	C-09862	82	5/09/68	5/13/68
D-13461	C-10032	83	5/13/68	5/17/68
D-13462	C-10033	84	5/17/68	5/22/68
D-13463	C-10034	85	5/22/68	5/26/68
D-13464	C-10035	86	5/26/68	5/30/68
D-13465	C-10036	87	5/30/68	6/04/68
D-13466	C-10037	88	6/04/68	6/08/68

D#	C#	ORBIT #	START	STOP
D-13467	C-10038	89	6/08/68	6/12/68
D-13468	C-10039	90	6/12/68	6/17/68
D-13469	C-10040	91	6/17/68	6/21/68
D-13470	C-10041	92	6/21/68	6/25/68
D-13471	C-10042	93	6/25/68	6/30/68
D-13472	C-10043	94	6/30/68	7/04/68
D-13473	C-10044	95	7/04/68	7/08/68
D-13474	C-10045	96	7/08/68	7/13/68
D-13475	C-10046	97	7/13/68	7/17/68
D-13476	C-10047	98	7/17/68	7/21/68
D-13477	C-10048	99	7/21/68	7/26/68
D-13478	C-10049	100	7/26/68	7/30/68
D-13479	C-10050	101	7/30/68	8/03/68
D-13480	C-10051	102	8/03/68	8/08/68
D-13481	C-10052	103	8/08/68	8/12/68
D-13482	C-10053	104	8/12/68	8/15/68
D-13483	C-10054	105	8/15/68	8/20/68
D-13484•	C-10055	106	8/20/68	8/25/68
D-13485	C-10056	107	8/25/68	8/29/68
D-13486•	C-10057	108	8/29/68	9/02/68
D-13487•	C-10058	109	9/02/68	9/07/68
D-13488	C-10059	110	9/07/68	9/11/68
D-13489	C-10060	111	9/11/68	9/15/68
D-13490	C-10061	112	9/15/68	9/20/68
D-13491	C-10062	113	9/20/68	9/24/68
D-13492•	C-10063	114	9/24/68	9/28/68
D-13493•	C-10064	115	9/28/68	10/03/68
D-13494	C-10065	116	10/03/68	10/07/68
D-13495•	C-10066	117	10/07/68	10/11/68
D-13496	C-10067	118	10/11/68	10/16/68

D#	C#	ORBIT #	START	STOP
D-13497	C-10068	119	10/16/68	10/20/68
D-13498	C-10069	120	10/20/68	10/24/68
D-13499•	C-10070	122	10/29/68	11/02/68
D-13500	C-10071	123	11/02/68	11/06/68
D-13501•	C-10072	124	11/06/68	11/11/68
D-13502•	C-10073	125	11/11/68	11/15/68
D-13503•	C-10074	126	11/15/68	11/19/68
D-13504	C-10075	127	11/19/68	11/24/68
D-13505	C-10076	128	11/24/68	11/27/68
D-13506•	C-10077	129	11/27/68	12/02/68
D-13507•	C-10078	130	12/02/68	12/07/68
D-13508	C-10079	132	12/11/68	12/15/68
D-13509	C-10080	133	12/15/68	12/20/68
D-13510	C-10081	134	12/20/68	12/24/68
D-13511	C-10082	135	12/24/68	12/28/68
D-13512	C-10083	136	12/28/68	1/02/69
D-13513	C-10084	137	1/02/69	1/06/69
D-13514•	C-10085	138	1/06/69	1/10/69
D-13515	C-10086	139	1/10/69	1/15/69
D-13516	C-10087	140	1/15/69	1/19/69
D-13517•	C-10088	141	1/19/69	1/23/69
D-13518	C-10089	142	1/23/69	1/28/69
D-13519•	C-10090	143	1/28/69	2/01/69
D-13520•	C-10091	144	2/01/69	2/05/69
D-13521•	C-10092	145	2/05/69	2/10/69

IMP F & G PHASE II
MAGNETIC FIELD ANALYSIS

William Mish
Laboratory for Space Sciences
NASA-Goddard Space Flight Center
Greenbelt, Maryland

April 1968
Revised July 1968

Part II

Introduction

The Phase II Analysis uses the Binary Summary Tapes produced by the Phase I Analysis (see Reference 1 and Appendix B) for each orbit as input to the utility sort program. These Binary Summary Tapes contain overlapping data originally on the IMP F Magnetic Field Experimenter Tape for the orbit and the sort arranges these telemetry sequences in chronological order with respect to time (overlapping sequences are arranged contiguously).

The following major functions are performed by the Phase II Analysis after sorting is completed:

1) Elimination of redundant sequences using redundancy criteria.
2) Hourly averages for SE, SM and Solar Magnetic (GM) coordinates are computed and punched on hourly average cards along with the appropriate trajectory information for the coordinate system.
3) At the end of each file the detail measurements from the Payload, SE and SM coordinates are formatted for plotting on the SC 4020 plotter.
4) The data from the autocorrelation computer are analyzed.
5) A new Nonredundant Binary Summary tape is produced.

The switching vector card is used to determine what coordinate system(s) are to be used in the hourly average computations and the detail SC 4020 plotting. In Table 1 check marks indicate what is available in the different frames of reference.

FRAME OF REFERENCE	HOURLY AVERAGE CARDS	SC 4020 DETAIL PLOTS*
Payload		✓
SE	✓	✓
SM	✓	✓
GM	✓	

TABLE II-1

In summary the Phase II Analysis produces four different outputs using three different types of output media:

1.) Magnetic Tape

   a.) SC 4020 plot tape
   b.) Nonredundant Binary Summary Tape

2.) Hourly average cards

3.) The power spectrum and refined autocorrelation information from the analysis of the autocorrelation computer data are printed on the high speed line printer.

*Only one of the three frames of reference can be plotted per program run because only one SC 4020 plot tape is available.

b) The abscissa is labeled with the ½-hour period being plotted.

8) <u>Generation of the Nonredundant Binary Summary Tape</u>

A Binary Summary Tape record is written in the same format as the input tape record. As a result of Section 3 redundant sequences are not included on this tape. These Nonredundant Binary Summary Tapes from each orbit comprise the permanent tape library for the IMP-F magnetic field experiment.

PHASE II
ANALYSIS
FLOWCHART

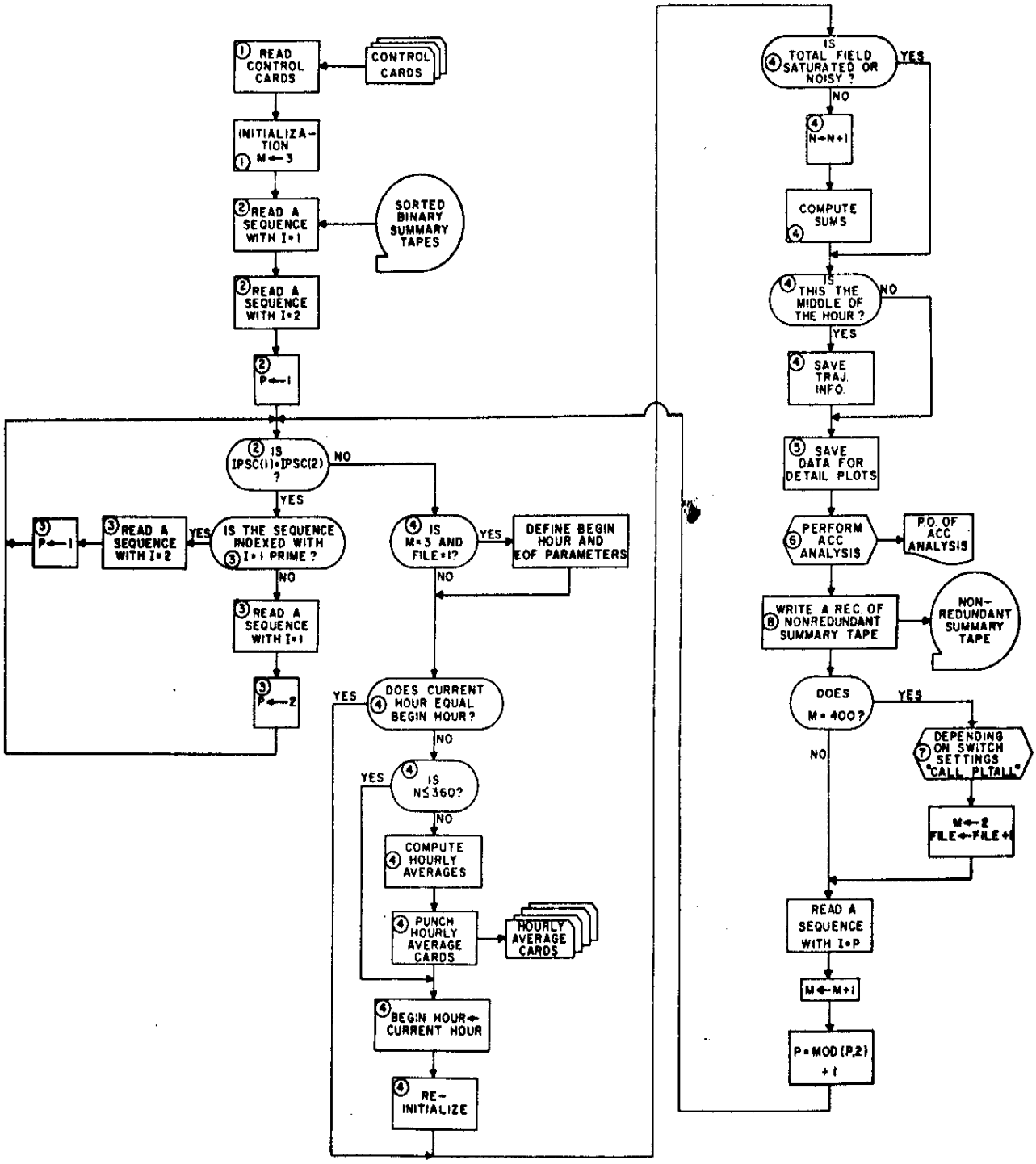

APPENDIX B

IMP F SUMMARY TAPE FORMAT

Item No.	Identification	Format
1	Satellite I. D.	I
2	Orbit Number	I
3	Telemetry Recording Station Number	I
4	Analog Tape Number	I
5	Analog-To-Digital Line I. D.	I
6	Day of Year (Start)	I
7	Milliseconds of Day	I
8	Day of Year (Stop)	I
9	Milliseconds of Day	I
10	Average Sequence Time (Milliseconds) This File	I
11	Quick Look Data Flag	I
12	Orbit/No Orbit Data Flag	I
13	Decom Process Date Year	I
14	Decom Process Date Month	I
15	Decom Process Date Day	I
16	Decom Process Date Hour	I
17	Orbit Tape I. D. Reel Number	I
18	Orbit Tape Date of Generation Year	I
19	Orbit Tape Date of Generation Month	I

Item No.	Identification	Format
20	Orbit Tape Date of Generation Day	I
21	Average Spin Period in Milliseconds	I
22	Year of Start Time	I
23	Year of Stop Time	I
24	Experimenter Tape Number	A4
25	Analysis Date	A4
26	Year of Frame 0, Channel 0	I
27	Day of Frame 0, Channel 0 (Decimal Day)	I
28	Milliseconds of Day	I
29	Time Quality Flag	I
30	Data Quality Flag for this Sequence	I
31	Experimenter On/Off Flags (Frame 4, Channel 2)	I
32	Orbit Data Flag	I
33	Analog Calibration Flag (Channel 1, Frame 4)	I
34	Pseudo-Sequence Count Quality Flag	I
35	Pseudo-Sequence Count	I
36	Sequence I. D. Quality Flag	I
37	Sequence I. D.	I
38	Satellite Clock	I
39	Average Frame Time in Milliseconds	I
40	PP21 (Bellows Temperature)	I

Item No.	Identification	Format
41	PP7 (+11.7 Volt Line)	I
42	Frame Number (1)	I
43	X Apparent	F
44	Y Apparent	F
45	Z Apparent	F
46	Frame Number (3)	I
47	X Apparent	F
48	Y Apparent	F
49	Z Apparent	F
50	Frame Number (5)	I
51	X Apparent	F
52	Y Apparent	F
53	Z Apparent	F
54	Frame Number (7)	I
55	X Apparent	F
56	Y Apparent	F
57	Z Apparent	F
58	Frame Number (9)	I
59	X Apparent	F
60	Y Apparent	F
61	Z Apparent	F

Item No.	Identification	Format
62	Frame Number (11)	I
63	X Apparent	F
64	Y Apparent	F
65	Z Apparent	F
66	Frame Number (13)	I
67	X Apparent	F
68	Y Apparent	F
69	Z Apparent	F
70	Frame Number (15)	I
71	X Apparent	F
72	Y Apparent	F
73	Z Apparent	F
74	Frame 8, Channel 1a, 1b, 2a	I
75	Frame 8, Channel 2b	I
76	Frame 8, Channel 3a, 3b	I
77	Frame 8, Channel 4a	I
78	Frame 8, Channel 4b, 5a	I
79	Frame 8, Channel 5b	I
80	Frame 8, Channel 6a, 6b	I
81	Frame 8, Channel 7a	I
82	Frame 8, Channel 7b, 8a	I

Item No.	Identification	Format
83	Frame 8, Channel 8b	I
84	Frame 8, Channel 9a, 9b	I
85	Frame 8, Channel 10a	I
86	Frame 8, Channel 10b, 11a	I
87	Frame 8, Channel 11b	I
88	Frame 8, Channel 12a, 12b	I
89	Frame 8, Channel 13a	I
90	Frame 8, Channel 13b, 14a	I
91	Frame 8, Channel 14b	I
92	Frame 8, Channel 15a, 15b	I
93	0A SCAN (Spin-Axis-Sun-Angle)	F
94	0A1 (Sun Time)	F
95	0A2 (Spin Period)	F
96	0A3 (Earth Time)	F
97	0A4 (Earth Width)	F
98	Day of Orbit Data	I
99	Milliseconds of Day of Orbit Data	I
100 - 142	Items 231-273 (Trajectory Data) from IMP F Experimenter Tape Format	F
143	X Payload	F
144	Y Payload	F
145	Z Payload	F

Item No.	Identification		Format
146	ALPHA Payload	For Frames 1,3,5,7,9,11,13,15	F
147	PSI Payload		F
148	Total Field Payload		F
191	X Average Payload		F
192	Y Average Payload		F
193	Z Average Payload		F
194	TOTAL FIELD AVERAGE 1 Payload		F
195	TOTAL FIELD AVERAGE 2 Payload		F
196	ALPHA Average Payload		F
197	PSI Average Payload		F
198	Standard Deviation of X Payload		F
199	Standard Deviation of Y Payload		F
200	Standard Deviation of Z Payload		F
201	Standard Deviation of Total Field 1 Payload		F
202	Standard Deviation of Total Field 2 Payload		F
203	Component Ratio Payload		F
204	Total Field Ratio Payload		F
205	X Solar Ecliptic	For Frames 1,3,5,7,9,11,13,15	F
206	Y Solar Ecliptic		F
207	Z Solar Ecliptic		F
208	THETA Solar Ecliptic		F
209	PHI Solar Ecliptic		F

Item No.	Identification		Format
245	X Average Solar Ecliptic		F
246	Y Average Solar Ecliptic		F
247	Z Average Solar Ecliptic		F
248	THETA Average Solar Ecliptic		F
249	PHI Average Solar Ecliptic		F
250	Standard Deviation of X Solar Ecliptic		F
251	Standard Deviation of Y Solar Ecliptic		F
252	Standard Deviation of Z Solar Ecliptic		F
253	Component Ratio Solar Ecliptic		F
254	Total Field Ratio Solar Ecliptic		F
255	X Solar Magnetospheric	For Frames 1,3,5,7,9,11,13,15	F
256	Y Solar Magnetospheric		F
257	Z Solar Magnetospheric		F
258	THETA Solar Magnetospheric		F
259	PHI Solar Magnetospheric		F
295	X Average Solar Magnetospheric		F
296	Y Average Solar Magnetospheric		F
297	Z Average Solar Magnetospheric		F
298	THETA Average Solar Magnetospheric		F
299	PHI Average Solar Magnetospheric		F
300	Standard Deviation of X Solar Magnetospheric		F

Item No.	Identification	Format
301	Standard Deviation of Y Solar Magnetospheric	F
302	Standard Deviation of Z Solar Magnetospheric	F
303	Component Ratio Solar Magnetospheric	F
304	Total Field Ratio Solar Magnetospheric	F
305	Celestial Inertial Orientation of Spin Axis for X	F
306	Celestial Inertial Orientation of Spin Axis for Y	F
307	Celestial Inertial Orientation of Spin Axis for Z	F

End of tape is indicated by an EOF mark. Files are not separated by any logical type of EOF record. This is a 9 track IBM 360 binary tape (999.0 indicates bad data). All words are single precision (i.e. 4 bytes in length).

307
4
1228
4
1232

67-051A-11D

FP

SATELLITE EXP	OREIT NUMBER	BEGIN YEAR	BEGIN MNTH	BEGIN DAY OF MNTH	BEGIN TIME	END YEAR	END MNTH	END DAY OF MNTH	END TIME	PRIMARY TAPE NC	BK UP TAPE NC
IMPF-MAGFLD	1	67	5	24	.1436014E+03	67	5	28	.1479525E+03	3.022	2.997
IMPF-MAGFLD	2	67	5	28	.1479317E+03	67	6	2	.1522153E+03	2.603	2.998
IMPF-MAGFLD	3	67	6	2	.1522401E+03	67	6	6	.1565504E+03	2.409	2.742
IMPF-MAGFLD	4	67	6	6	.1565618E+03	67	6	10	.1608530E+03	2.412	2.784
IMPF-MAGFLD	5	67	6	10	.1608714E+03	67	6	15	.1651865E+03	2.417	2.847
IMPF-MAGFLD	6	67	6	15	.1652029E+03	67	6	19	.1694995E+03	3.020	2.780
IMPF-MAGFLD	7	67	6	19	.1695167E+03	67	6	23	.1738039E+03	2.405	3.034
IMPF-MAGFLD	8	67	6	23	.1738266E+03	67	6	28	.1781652E+03	2.324	2.604
IMPF-MAGFLD	9	67	6	28	.1781606E+03	67	7	2	.1824354E+03	2.419	3.193
IMPF-MAGFLD	10	67	7	2	.1824702E+03	67	7	6	.1867344E+03	2.410	3.363
IMPF-MAGFLD	11	67	7	6	.1867915E+03	67	7	11	.1918263E+03	2.608	2.713
IMPF-MAGFLD	12	67	7	11	.1919731E+03	67	7	15	.1954439E+03	3.570	3.572
IMPF-MAGFLD	13	67	7	15	.1954514E+03	67	7	19	.1997575E+03	2.657	2.972
IMPF-MAGFLD	14	67	7	19	.1997715E+03	67	7	24	.2048703E+03	2.708	3.021
IMPF-MAGFLD	15	67	7	24	.2041036E+03	67	7	28	.2084288E+03	2.575	2.570
IMPF-MAGFLD	16	67	7	28	.2084400E+03	67	8	1	.2127508E+03	2.561	2.902
IMPF-MAGFLD	17	67	8	1	.2127683E+03	67	8	6	.2166906E+03	3.372	3.573
IMPF-MAGFLD	18	67	8	6	.2179094E+03	67	8	10	.2214534E+03	2.659	3.574
IMPF-MAGFLD	19	67	8	10	.2214702E+03	67	8	14	.2257661E+03	2.651	3.575
IMPF-MAGFLD	20	67	8	14	.2257878E+03	67	8	19	.2299474E+03	2.704	3.576
IMPF-MAGFLD	21	67	8	19	.2301138E+03	67	8	23	.2344187E+03	2.690	3.577
IMPF-MAGFLD	22	67	8	23	.2344544E+03	67	8	27	.2387607E+03	2.741	3.578
IMPF-MAGFLD	23	67	8	27	.2387827E+03	67	9	1	.2439215E+03	2.679	3.579
IMPF-MAGFLD	24	67	9	1	.2431068E+03	67	9	5	.2474261E+03	2.664	2.712
IMPF-MAGFLD	25	67	9	5	.2474747E+03	67	9	9	.2517500E+03	3.196	2.582
IMPF-MAGFLD	26	67	9	9	.2517772E+03	67	9	14	.2566694E+03	2.975	3.580
IMPF-MAGFLD	27	67	9	14	.2568872E+03	67	9	18	.2603967E+03	2.682	2.705
IMPF-MAGFLD	28	67	9	18	.2604236E+03	67	9	22	.2646560E+03	2.691	2.580
IMPF-MAGFLD	29	67	9	22	.2647488E+03	67	9	26	.2695146E+03	3.194	2.781
IMPF-MAGFLD	30	67	9	26	.2696636E+03	67	10	1	.2733677E+03	3.235	2.681
IMPF-MAGFLD	31	67	10	1	.2733875E+03	67	10	5	.2773259E+03	2.665	2.845
IMPF-MAGFLD	32	67	10	5	.2777427E+03	67	10	10	.2825398E+03	3.197	2.395
IMPF-MAGFLD	33	67	10	10	.2826746E+03	67	10	14	.2863938E+03	2.976	2.686
IMPF-MAGFLD	34	67	10	14	.2863958E+03	67	10	18	.2898623E+03	2.661	2.218
IMPF-MAGFLD	35	67	10	18	.2907458E+03	67	10	23	.2956597E+03	2.668	2.219
IMPF-MAGFLD	36	67	10	23	.2959626E+03	67	10	27	.2994214E+03	2.696	2.220
IMPF-MAGFLD	[illegible]	67	10	27	.2994099E+03	67	10	31	.3037705E+03	2.606	2.221
IMPF-MAGFLD	[illegible]	[illegible]	10	31	.3037766E+03	67	11	5	.3081047E+03	2.779	2.178
IMPF-MAGFLD	[illegible]	67	11	[illegible]	.3089573E[illegible]	67	11	9	.3124160E+03	2.904	2.180
IMPF-MAGFLD	[illegible]	67	11	[illegible]	.3124172E[illegible]	67	11	13	.3167424E+03	2.971	3.032
IMPF-MAGFLD	41	67	11	13	.3167424E[illegible]	67	11	18	.3216179E+03	2.662	3.003
IMPF-MAGFLD	42	67	11	18	.3217551E+[illegible]	67	11	22	.3253472E+03	2.672	2.695
IMPF-MAGFLD	43	67	11	22	.3253816[illegible]	67	11	26	.3297158E+03	3.024	2.605
IMPF-MAGFLD	44	[illegible]	[illegible]	26	.3297170[illegible]	67	11	30	.3341650E+03	3.365	3.366
IMPF-MAGFLD	45	67	12	1	.[illegible]1011[illegible]	67	12	5	.3383125E+03	3.368	3.023
IMPF-MAGFLD	46	67	12	5	[illegible]327[illegible]03	67	12	9	.3426636E+03	3.002	2.562
IMPF-MAGFLD	[illegible]	67	12	9	[illegible]66[illegible]	67	12	13	.3469629E+03	3.190	2.706
IMPF-MAGFLD	[illegible]	67	12	13	[illegible]95[illegible]	67	12	18	.3512634E+03	3.191	2.970
IMPF-MAGFLD	49	67	12	18	[illegible]274[illegible]3	67	12	22	.3555864E+03	3.019	2.626
IMPF-MAGFLD	50	67	12	22	[illegible]5859[illegible]+03	[illegible]	12	26	.3599324E+03	2.786	3.025
IMPF-MAGFLD	51	67	12	26	[illegible]931[illegible]3		12	31	.3642368E+03	2.687	2.99[illegible]
IMPF-MAGFLD	52	67	12	31	[illegible]248[illegible]03		1	4	.3551610E+0[illegible]	[illegible]	
IMPF-MAGFLD	53	68	[illegible]	4	[illegible]1970[illegible]		1	8	.7903360E+0[illegible]	2.552	3.004
IMPF-MAGFLD	54	68	1	8	[illegible]4810E+[illegible]		1	13	.1221492E+02	2.707	3.991

SATELLITE EXP	ORBIT NUMBER	BEGIN YEAR	BEGIN MNTH	BEGIN DAY OF MNTH	BEGIN TIME	END YEAR	END MNTH	END DAY OF MNTH	END TIME	PRIMARY TAPE NO	BK UP TAPE NO
IMPF-MAGFLD	55	68	1	13	.1122676E+02	68	1	17	.1652077E+02	3.336	3.992
IMPF-MAGFLD	56	68	1	17	.1634301E+02	68	1	21	.1970493E+02	2.991	3.993
IMPF-MAGFLD	57	68	1	21	.2091443E+02	68	1	26	.2511744E+02	3.584	3.994
IMPF-MAGFLD	58	68	1	26	.2523259E+02	68	1	[illegible]	.2954198E+02		
IMPF-MAGFLD	59	68	1	30	.2955832E+02	68	2	3	.3362387E+02		
IMPF-MAGFLD	60	68	2	3	.3389377E+02	68	2	[illegible]	.3821027E+02	[illegible]	3.369
IMPF-MAGFLD	61	68	2	8	.3823299E+02	68	2	12	.4253505E+02	[illegible]	2.996
IMPF-MAGFLD	62	68	2	12	.4254973E+02	68	2	16	.4689912E+02	2.464	2.819
IMPF-MAGFLD	63	68	2	16	.4691356E+02	68	2	21	.5120709E+02	2.277	3.189
IMPF-MAGFLD	64	68	2	21	.5122699E+02	68	2	25	.5553140E+02	2.276	2.429
IMPF-MAGFLD	65	68	2	25	.5555223E+02	68	2	29	.5899809E+02	2.413	2.415
IMPF-MAGFLD	66	68	2	29	.5988104E+02	68	3	5	.6418309E+02	3.367	3.599
IMPF-MAGFLD	67	68	3	5	.6420439E+02	68	3	9	.6850526E+02	2.416	3.382
IMPF-MAGFLD	68	68	3	9	.6852089E+02	68	3	13	.8264070E+02		
IMPF-MAGFLD	69	68	3	13	.7285466E+02	68	3	18	.7716501E+02		
IMPF-MAGFLD	70	68	3	18	.7719412E+02	68	3	22	.8150233E+02		3.441
IMPF-MAGFLD	71	68	3	22	.8151749E+02	68	3	26	.8583847E+02		
IMPF-MAGFLD	72	68	3	26	.8585764E+02	68	3	31	.9015590E+02	3.334	2.660
IMPF-MAGFLD	73	68	3	31	.9018526E+02	68	4	4	.9450293E+02	3.610	2.064
IMPF-MAGFLD	74	68	4	4	.9451430E+02	68	4	8	.9861943E+02	3.200	3.195
IMPF-MAGFLD	75	68	4	8	.9884334E+02	68	4	13	.1031892E+03	2.905	2.586
IMPF-MAGFLD	76	68	4	13	.1032131E+03	68	4	17	.1075414E+03		
IMPF-MAGFLD	77	68	4	17	.1075428E+03	68	4	21	.1118439E+03	2.408	2.581
IMPF-MAGFLD	78	68	4	21	.1118704E+03	68	4	26	.1161607E+03	3.385	3.386
IMPF-MAGFLD	79	68	4	26	.1161988E+03	68	4	30	.1205197E+03	2.423	2.424
IMPF-MAGFLD	80	68	4	30	.1205709E+03	68	5	4	.1248244E+03	2.585	2.607
IMPF-MAGFLD	81	68	5	4	.1248521E+03	68	5	9	.1291738E+03	3.373	3.374
IMPF-MAGFLD	82	68	5	9	.1291991E+03	68	5	13	.1335239E+03	2.714	2.714
IMPF-MAGFLD	83	68	5	13	.1335213E+03	68	5	17	.1377996E+03	3.377	3.378
IMPF-MAGFLD	84	68	5	17	.1378295E+03	68	5	22	.1421339E+03	3.331	3.332
IMPF-MAGFLD	85	68	5	22	.1421469E+03	68	5	26	.1464811E+03	3.046	3.047
IMPF-MAGFLD	86	68	5	26	.1464790E+03	68	5	30	.1507742E+03	2.969	3.198
IMPF-MAGFLD	87	68	5	30	.1507834E+03	68	6	4	.1559682E+03	2.739	2.740
IMPF-MAGFLD	88	68	6	4	.1559611E+03	68	6	8	.1594270E+03	2.427	2.428
IMPF-MAGFLD	89	68	6	8	.1594417E+03	68	6	12	.1637470E+03	2.979	2.980
IMPF-MAGFLD	90	68	6	12	.1637530E+03	68	6	17	.1684459E+03	2.985	2.986
IMPF-MAGFLD	91	68	6	17	.1686756E+03	68	6	21	.1724018E+03	2.420	2.687
IMPF-MAGFLD	92	68	6	21	.1724056E+03	68	6	25	.1767078E+03	2.755	2.846
IMPF-MAGFLD	93	68	6	25	.1767164E+03	68	6	30	.1813048E+03	2.903	2.907
IMPF-MAGFLD	94	68	6	30	.1812882E+03	68	7	4	.1853898E+03	2.787	3.335
IMPF-MAGFLD	95	68	7	4	.1853945E+03	68	7	8	.1897136E+03	3.017	3.371
IMPF-MAGFLD	96	68	7	8	.1897129E+03	68	7	13	.1943815E+03	2.692	2.693
IMPF-MAGFLD	97	68	7	13	.1943602E+03	68	7	17	.1983816E+03	3.370	3.376
IMPF-MAGFLD	98	68	7	17	.1983792E+03	68	7	21	.2027035E+03	2.544	2.909
IMPF-MAGFLD	99	68	7	21	.2027030E+03	68	7	25	.2070983E+03	2.568	3.388
IMPF-MAGFLD	100	68	7	26	.2070496E+03	[illegible]	7	30	.2113905E+03	2.472	2.699
IMPF-MAGFLD	101	68	7	30	.2113857E+03		8	3	.2156930E+03	2.685	2.559
IMPF-MAGFLD	102	68	[illegible]	3	.2156955E+03		8	7	.2200116E+03	2.563	2.709
IMPF-MAGFLD	103	68	8	8	.2200134E+03		8	12	.2243598E+03	2.009	2.158
IMPF-MAGFLD	104	68	8	12	.2243586E+03		8	16	.2286772E+03	2.160	2.161
IMPF-MAGFLD	105	68	8	16	.2286743E+03		8	20	.2329870E+03	3.419	3.420
IMPF-MAGFLD	106	68	8	20	.2329875E+03		8	25	.2373326E+03	2.578	2.579
IMPF-MAGFLD	107	68	8	25	.2373317E+03		8	29	.2416605E+03	2.529	3.000
IMPF-MAGFLD	108	68	8	29	.2416593E+03		9	2	.2469722E+03	3.426	3.427

SATELLITE EXP	ORBIT NUMBER	BEGIN YEAR	BEGIN MNTH	BEGIN DAY OF MNTH	BEGIN TIME	END YEAR	END MNTH	END DAY OF MNTH	END TIME	PRIMARY TAPE NO	BK UP TAPE NO
IMPF-MAGFLD	109	68	9	2	.2459722E+03	68	9	7	.2502933E+03	3.424	3.425
IMPF-MAGFLD	110	68	9	7	.2502911E+03	68	9	11	.2545927E+03	3.428	3.429
IMPF-MAGFLD	111	68	9	11	.2546357E+03	68	9	15	.2589580E+03	2.468	2.548
IMPF-MAGFLD	112	68	9	15	.2589551E+03	68	9	20	.2632705E+03	3.391	2.541
IMPF-MAGFLD	113	68	9	20	.2632690E+03	68	9	24	.2676589E+03	3.392	3.389
IMPF-MAGFLD	114	68	9	24	.2676563E+03	68	9	28	.2719690E+03	3.437	3.438
IMPF-MAGFLD	115	68	9	28	.2719666E+03	68	10	3	.2762625E+03	3.439	3.440
IMPF-MAGFLD	116	68	10	3	.2762756E+03	68	10	7	.2806[illegible]3E+03	2.826	2.828
IMPF-MAGFLD	117	68	10	7	.2806943E+03	68	10	11	.284[illegible]48E+03	3.418	2.566
IMPF-MAGFLD	118	68	10	11	.2849648E+03	68	10	16	.2893488E+03	2.703	2.576
IMPF-MAGFLD	119	68	10	16	.2892664E+03	68	10	20	.2936[illegible]9E+03	2.558	2.547
IMPF-MAGFLD	120	68	10	20	.2936274E+03	68	10	24	.2979270E+03	2.317	2.478
IMPF-MAGFLD	121	68	10	24	.2979402E+03	68	10	29	.3021951E+03	~~2.517~~	~~2.678~~
IMPF-MAGFLD	122	68	10	29	.3022673E+03	68	11	2	.3065591E+03	3.442	
IMPF-MAGFLD	123	68	11	2	.3066182E+03	68	11	6	.3108960E+03	3.380	3.327
IMPF-MAGFLD	124	68	11	6	.3111409E+03	68	11	11	.3151213E+03	2.574	2.569
IMPF-MAGFLD	125	68	11	11	.3152285E+03	68	11	15	.3195244E+03	2.162	2.557
IMPF-MAGFLD	126	68	11	15	.3195544E+03	68	11	19	.3238635E+03	3.381	3.192
IMPF-MAGFLD	127	68	11	19	.3238772E+03	68	11	24	.3281768E+03	2.402	3.390
IMPF-MAGFLD	128	68	11	24	.3281345E+03	68	11	28	.3324797E+03	3.447	3.448
IMPF-MAGFLD	129	68	11	28	.3325215E+03	68	12	2	.3368203E+03	3.444	3.445
IMPF-MAGFLD	130	68	12	2	.3368362E+03	68	12	7	.3411355E+03	3.422	3.423
IMPF-MAGFLD	131	68	12	7	.3411543E+03	68	12	11	.3454370E+03	~~3.603~~	
IMPF-MAGFLD	132	68	12	11	.3454673E+03	68	12	15	.3496018E+03	3.587	2.306
IMPF-MAGFLD	133	68	12	15	.3498188E+03	68	12	20	.3541184E+03	3.589	2.573
IMPF-MAGFLD	134	68	12	20	.3541375E+03	68	12	24	.3584143E+03	3.591	2.577
IMPF-MAGFLD	135	68	12	24	.3584607E+03	68	12	28	.3627766E+03	2.974	2.977
IMPF-MAGFLD	136	68	12	28	.3627917E+03	69	1	2	.1979079E+01	3.581	3.582
IMPF-MAGFLD	137	69	1	2	.1119209E+01	69	1	6	.5412979E+01	2.782	3.585
IMPF-MAGFLD	138	69	1	6	.5433339E+01	69	1	10	.9791499E+01	3.387	3.448
IMPF-MAGFLD	139	69	1	10	.9794809E+01	69	1	15	.1469995E+02	3.616	3.619
IMPF-MAGFLD	140	69	1	15	.1411509E+02	69	1	19	.1842589E+02	3.620	3.621
IMPF-MAGFLD	141	69	1	19	.1843332E+02	69	1	23	.2263541E+02	2.698	3.624
IMPF-MAGFLD	142	69	1	23	.2276889E+02	69	1	28	.2771898E+02	3.625	3.626
IMPF-MAGFLD	143	69	1	28	.2796283E+02	69	2	1	.3138033E+02	3.627	3.594
IMPF-MAGFLD	144	69	2	1	.3141277E+02	69	2	5	.3575482E+02	3.628	3.629
IMPF-MAGFLD	145	69	2	5	.3575838E+02	69	2	10	.4058768E+02	3.613	3.614

Joe,
the Data Centre can have the tapes under the "BK UP" heading, however, we would like new tape replacement. Where there is no tape # under "BK UP" duplicate the "PRIMARY" tape but please do not remove the "PRIMARY" tape.
Enclosed is an X-Doc that describes the tape formats on page B1

```
++FT20F001 DD UNIT=(2400-9,,DEFER),LABEL=(1,BLP,,OUT),
++         DCB=(RECFM=VBS,BLKSIZE=19716,LRECL=1232,DEN=2),
++         DISP=(NEW,KEEP,DELETE),VOL=SER=&SUM
```

Any question call me X5444
Bill Misl

FP 29411

ORBIT # 1

RECORD 1 OF FILE 1

4D040000	04D00000	0000000D	00000001	00000008	00000001	00000001	00000090	03152F40	00000090
03813780	00004FE6	00000002	00000001	40404040	0000000C	00000012	00000000	00000013	00000043
0000000B	00000013	00000A14	00000043	00000043	D6C2F0F1	F2F3F2F8	00000043	000000BF	031DE9EA
00000001	00000005	00000013	00000001	00000078	00000018	0000AE7B	00000000	0000001B	0000AE7B
000004FE	4217030B	418C0F27	00000001	421D0740	4222F63B	4229184F	00000003	421CF5ED	42234E14
4229184F	00000005	421D0740	4222F63B	4229184F	00000007	421CF5EC	42234E14	4229184F	00000009
421D0740	4222F63B	4229184F	0000000B	421D0740	4222F63B	4229184F	0000000D	421D0740	4222F63B
4229184F	0000000F	421D0740	4222F63B	4229184F	00007177	0000000F	000004F	0000000F	00000050
0000000F	00000051	0000000F	00000051	0000000F	00000052	0000000F	00000053	0000000F	00000054
0000000F	00000055	0000000F	00000056	425B8000	434D1000	43A10A00	4351E000	41200000	00000090
031D9A03	C22707B0	C21DF597	403AE730	C0CEC765	C110145B	4114F61F	403AE730	C0A21B74	C111F842
C238738D	C1A44341	C131C3DC	C238738D	C199F671	C14BDB68	423980FA	4238AE74	42206490	4188ADA2
441F6036	C212A68E	4312778C	444D0C03	41100000	00000000	00000000	00000000	40FC94B8	C029B319
00000000	4029B319	40FC94B8	407546E0	40D0C603	405A87CA	C0E38E8F	406B98AD	402EA832	00000000
C065D89D	40EADE6A	C230F0C5	C269321E	42222AB2	421DF5C3	4228B8D2	4229DD50	42293F29	C23D04B7
4223F8A4	421C20F8	4228B6C0	4229B86A	42260651	C23D2DA1	422500AB	421A60AC	4228B8D2	4229DD50
42237BC5	C23D04B8	42269D35	42185FDA	4228B6C0	4229B86A	422042EA	C23D2DA2	422776E4	42168749
4228B8D2	4229DD50	421DB853	C23D04B7	42288C0F	42148415	4228B8D2	4229DD50	421AD6A1	C23D04B7
422986FD	42127393	4228B8D2	4229DD50	4217F4E3	C23D04B8	422A6710	42105703	4228B8D2	4229DD50
42151300	C23D04B7	4226B646	421755A6	4228B84C	C23D0EEE	423CD670	422A03BC	421F1498	412D7D52
414C27F7	3EF558FA	412B9081	403F4EEF	3FAAB575	3FAA1795	422066CA	C21E68C3	C229D129	C22B42BB
4313CD11	42223467	C21C942F	C229E7C7	C22B3BC3	431401ED	42233C1A	C21AD40F	C229F9E4	C22B7755
43142B6B	4224D85B	C218D36E	C22A0EE0	C22B6E18	43146073	4225B1C1	C216FB03	C22A1F46	C22BA7C6
43148A19	4226C6AB	C214F7F8	C22A3097	C22BBE44	4314B98D	4227C15F	C212E79A	C22A40EE	C22BD384
4314E915	4228A13E	C210CB2C	C22A5042	C22BE77B	43151BB0	4224F154	C217C946	C22A1456	C22BC321
43147394	412D728B	414C2186	402C4767	3FAE698D	3FADC834	422066CA	C2173109	C22E363C	C2313B03
43144681	42223467	C2155F08	C22E0039	C230C1B1	4314800B	42233C1A	C213A1F0	C22DC91A	C2309F0B
4314ADFA	4224D85B	C211A4BD	C22D8A4D	C2301B40	4314E698	4225B1C1	C1FCFF5D	C22D4D88	C22FF0AF
431513E1	4226C6AB	C1DD0F9C	C22D0AB9	C22F935F	43154637	4227C15F	C1BC5016	C22CC4C7	C22F325C
43157823	4228A13E	C19AD4B3	C22C7BDE	C22ECDFB	4315A9A7	4224F154	C2109D3F	C22D6454	C2304145
4314FC8F	412D728B	414B903B	409AEBD5	3FB750DA	3FB6A73F	BF28FC3F	405BB4D9	C0EEFF21	04D00000
0000000D	00000001	00000008	00000001	00000001	00000090	03152F40	00000090	03813780	00004FE6
00000002	00000001	40404040	0000000C	00000012	00000000	00000013	00000043	0000000B	00000013
00000A14	00000043	00000043	D6C2F0F1	F2F3F2F8	00000043	000000BF	031E39D0	00000001	00000005
00000013	00000001	0000005A	00000018	0000AE7C	00000000	0000001C	0000AE7C	000004FE	7FFFFFFF
418C0F27	00000001	421D0740	4222F63B	4229184F	00000003	421D0740	4222F63B	4229184F	00000C05
421D0740	4222F63B	4229184F	00000007	421D483C	42234E14	4229184F	00000009	421D0740	4222F63B
4229184F	0000000B	421CF5ED	42234E14	4229184F	0000000D	421CF5ED	42234E14	4229184F	0000000F
421D0740	4222F63B	4229184F	00000297	0000000A	000004D	0000000C	00000061	0000000D	00000048
0000000E	0000000F	0000000E	0000003B	0000000E	00000066	0000000F	00000009	0000000F	000001F
0000000F	00000033	425C8000	43571000	43A10A00	435C3000	43978000	00000090	031D9A03	C22707B0
C21DF597	403AE730	C0CEC765	C110145B	4114F61F	403AE730	C0A21B74	C111F842	C238738D	C1A44341
C131C3DC	C238738D	C199F671	C14BDB68	423980FA	4238AE74	42206490	4188ADA2	441F6036	C212A68E
4312778C	444D0C03	41100000	00000000	00000000	00000000	40FC94B8	C029B319	00000000	4029B319
40FC94B8	407546E0	40D0C603	405A87CA	C0E38E8F	406B98AD	402EA832	00000000	C065D89D	40EADE6A
C230F0C5	C269321E	422AFE7A	41EB6A14	4228B8D2	4229DD50	4212E456	C23D04B8	422BADEC	41C88874
4228B8D2	4229DD50	4210029F	C23D04B8	422C4119	41A52425	4228B8D2	4229DD50	41D20D6A	C23D04B7
422D240D	41822C80	4228B7C1	4229988D	41A3786C	C23D556E	422D112A	415D3430	4228B8D2	4229DD50
4175D742	C23D04B8	422D8B53	4134C8C0	4228B6C0	4229B869	414249BB	C23D2DA2	422DA70A	41101410
4228B6C0	4229B86A	41142CFE	C23D2DA2	422D6E3F	C1103930	4228B8D2	4229DD50	43166B8B	C23D04B8
422CB866	416DA35E	4228B82A	C23D1906	423CDE38	4229FCF9	418B6271	40F92528	41592FFD	3EF342EF
4126EF9D	4045EF1B	3F92F2EC	3F926589	42293885	C1F2AE35	C22A5B2A	C22BF5B2	43153CC6	4229E7CE
C1CFCE60	C22A639B	C22C073E	43156C7B	422A7AD9	C1AC6BA8	C22A74EF	C22C175A	43159C3F	422B5DA4
C18975FE	C22A8385	C22BE160	4315CCB4	422B4ABA	C1647E45	C22A8A1C	C22C3310	4315FB5B	422BC4DD
C13136F	C22A942A	C22C1AF4	4316318C	422BE08E	C1176003	C22A9BA1	C22C24B1	4316617C	422BA7B9
408ECD1A	C22AA0D0	C22C50D3	40BB6936	422AF212	C174EC6E	C22A82DE	C22C4CCB	4315E57C	4CF8F1F0

DUPE OF D-12944

START: 5/24/67

STOP: 5/28/67

41592D18	4018D92C	3F950271	3F94730D	42293885	C1810CBE	C22C42D2	C22E7FF0	4315CEDC	4229E7CE
C15E811E	C22BF531	C22E1671	4315FFA2	422A7AD9	C13B7741	C22BA522	C22DAA77	43162FFF	422B5DA4
C118D31B	C22B586A	C22CF7DB	43165F37	422B4A8A	40BB7660	C22AFE91	C22CCC61	40F81404	422BC4DD
4133B1BB	C22A9F28	C22C294D	41438C3B	422BE08E	4157FBA5	C22A46DE	C22BB679	41724B50	422BA7B9
4177E78B	C229F7CD	C22B74A1	419BD9DD	422AF212	C049178A	C22B223A	C22D1FE3	431679E7	40F8F1F0
41583C2F	40D038A2	3FA3C1FC	3FA3245E	BF28FC3F	405BB4D9	C0EEFF21	04D00000	0000000D	00000001
00000008	00000001	00000001	00000090	03152F40	00000090	03813780	00004FE6	00000002	00000001
40404040	0000000C	00000012	00000000	00000013	00000043	0000000B	00000013	00000A14	00000043
00000043	D6C2F0F1	F2F3F2F8	00000043	0000008F	031E89B7	00000001	00000005	00000013	00000001
000000DB	00000018	0000AE7D	00000000	0000001D	0000AE7D	000004FE	4217030B	41BC0F27	00000001
421D0738	4222F63B	4229184F	00000003	421D5987	4222F63B	4229184F	00000005	422261C2	417D32B4
4229184F	00000007	422BDFA7	C226A85D	4229184F	00000009	422CE47F	C22BD289	4229184F	00000008
422CF72C	C22C3136	4229184F	0000000D	422CA4DC	C22C3136	4229184F	0000000F	422CA4DC	C22C3136
4229184F	00007177	0000000F	000004F	0000000F	00000050	0000000F	00000051	0000000F	00000051
0000000F	00000052	0000000F	00000053	0000000F	00000054	0000000F	00000055	0000000F	00000056
425C8000	4360F000	43A10900	43FDA000	41200000	00000090	031E89B7	C2297835	C21ADCDD	40382B3F
C0C57B16	C11168E3	4115A240	40382B3F	C09523CC	C113328C	C2387336	C1A46A4B	C131C711	C2387336
C19A07C6	C14C0EE2	42397F20	4238AB61	4220668C	41842752	441CFD05	C217CD15	4312874E	4447278E
41100000	00000000	000C0000	00000000	40FC8954	C029F7DD	00000000	4029F7DD	40FC8954	4075462F
40D0C657	405A87EF	C0E38EEB	406B980B	402EA7EC	00000000	C065D89D	40EADE6A	C233B61A	C2661DF4
422D5F2A	C12862C0	4228B8D2	4229DD53	43164D0D	C23D04B4	422D6B25	C1492230	4228B9D3	4229BD0D
4316240D	C23D2CB3	421EF975	4210D99D	42295C9B	42318D62	421C8BCE	C2365A18	41A46B10	4239909A
422A7627	4223FC3B	424FE0E2	C24843F1	41AF8020	423DC4E8	422A9553	42222AED	424FEE37	C24BD29A
41DE9850	423D7E06	422A978E	42220AA7	424D4078	C24C15C1	4210B2DF	423C8EAD	422A968D	422222CB
424A9570	C24BE4AA	4213B601	423BA518	422A968D	422222CB	42478674	C24BE4A8	42182A9B	4226D912
4229F3EA	C2451020	423E12FE	422A8523	423A1D78	41E9DE4E	421E2C60	40DD8769	42106F1F	41B8AFBE
403EC32E	40386949	422B98A7	41211639	C22AA44F	C22C556D	412B7386	422BA495	4141D4EC	C22AAB6E
C22C3A2D	41562BD6	421D2F51	C2114E2E	C22A75E8	C2335F3C	43149557	418755EF	C23A052A	C22A3DFF
C223C549	431164B6	4192532E	C23E39D2	C22A592C	C221F410	431165C6	41C15EE9	C23DF350	C22A7C40
C221F1DB	4311909F	41EDEADD	C23D044A	C22A9C2F	C22227F0	4311BB23	4211E11B	C23C1B13	C22ABF86
C2224834	4311E90E	4216 5B9A	C2274E24	C22A8696	C22B3DE5	4312BA1E	41EA3A1C	421E2CA4	402C2F46
403DD7A5	40379594	422B98A7	41907D3E	C229B9D3	C22B24AE	41BB3EA1	422BA495	41B0DD35	C2296AF6
C22A9CED	41E3690A	421D2F51	C1A1C3E7	C22CB91D	C2375ED5	43154E48	418755EF	C2324F60	C2332EB0
C22D17D9	431178B3	4192532E	C2367103	C233FA00	C22B466C	43117892	41C15EE9	C23625B5	C234110C
C22B2EAA	4311A950	41EDEADD	C23534AF	C234095C	C22B4984	4311D9D5	4211E11B	C2344BD3	C23405FE
C22B4606	43120E0F	4216 5B9A	C21FCD46	C23064DC	C23339AE	431311BC	41EA3A1C	421DC6CD	414E2F17
4043C696	403CEACA	BF28FC3F	405BB4D9	C0EEFF21	04D00000	0000000D	00000001	00000008	00000001
00000001	00000090	03152F40	00000090	03813780	00004FE6	00000002	00000001	40404040	0000000C
00000012	00000000	00000013	00000043	0000000B	00000013	00000A14	00000043	00000043	D6C2F0F1
F2F3F2F8	00000043	0000008F	031ED99D	00000001	00000005	00000013	00000001	0000003C	00000018
0000AE7E	00000000	0000001E	0000AE7E	000004FE	7FFFFFFF	41BC0F27	00000001	422CF72C	C22C3136
4229184F	00000003	422CB78B	C22C8FE9	4229184F	00000005	422CA4DC	C22C3136	4229184F	00000007
422CF72C	C22C3136	4229184F	00000009	422CB78B	C22C8FE9	4229184F	0000000B	422D09DA	C22C8FE9
4229184F	0000000D	422D09DA	C22C8FE9	4229184F	0000000F	422D09DA	C22C8FE9	4229184F	00000477
00000009	0000004F	0000000C	00000048	0000000D	0000003B	0000000E	00000009	0000000E	00000035
0000000E	00000060	0000000F	00000006	0000000F	0000001E	0000000F	00000033	425B8000	436AC000
43A10900	436FC000	40000000	00000090	031E89B7	C2297835	C21ADCDD	40382B3F	C0C57B16	C11168E3
4115A240	40382B3F	C09523CC	C113328C	C2387336	C1A46A4B	C131C711	C2387336	C19A07C6	C14C0EE2
42397F20	4238AB61	4220668C	41842752	441CFD05	C217CD15	4312874E	4447278E	41100000	00000000
00000000	00000000	40FC8954	C029F7DD	00000000	4029F7DD	40FC8954	4075462F	40D0C657	405A87EF
C0E38EEB	406B980B	402EA7EC	00000000	C065D89D	40EADE6A	C233B61A	C2661DF4	4215E4BC	423B1F7A
422A978E	42220AA8	4245AE1F	C24C15C1	4218756F	423A3306	422A98C8	4222026A	42433478	C24C282B
421B6634	423B86F3	422A968D	422222CB	424023DB	C24BE4A8	421E81A2	42372CA3	422A978E	42220AA7
423D0FB7	C24C15C1	4220E789	4235E069	422A98C8	42220269	423A9602	C24C282B	4223E109	4234385B
422A99CA	4221EA86	42378211	C24C592D	422673A4	42325B1A	422A99CA	4221EA86	4234A277	C24C592D
4228ECF9	42305DDF	422A99CA	4221EA86	4231C37B	C24C592B	421F8D66	42363AF4	422A9890	C24C2D7A
424BD5A5	42222C51	423BCEE5	416BD5C9	413C4C38	3F13C522	413993CC	4066CB07	3FBD4784	3FBC6D4D
42140F4A	C23B95BB	C22AD9C0	C22246E6	431209B3	42169F57	C23AA99A	C22AF978	C2225A59	4312316A
42198F85	C238FDE0	C22B1BE1	C2229CC0	4312627F	421CAA2F	C237A3F5	C22B4277	C222A68A	4312941B
421F0F7B	C2365809	C22B6162	C222B941	4312BC01	4222083F	C234B05E	C22B875C	C222C271	4312EDBD
42249A41	C232D371	C22BA883	C222E0BF	43131C27	42271303	C230D687	C22BC8EE	C222FE6D	43134A9A
421DB5AA	C236B26E	C22B5174	C222D5D4	4312A826	416BBC1D	413C3EAA	4054AA83	3FC2F977	3FC218AF
42140F4A	C233C0FD	C2340A00	C22B2764	431232FB	42169F57	C232D2DB	C2340294	C22B12C5	43125FEA
42198F85	C2312746	C233DE68	C22B1D08	4312979A	421CAA2F	C22FCBB6	C233CBC2	C22AE745	4312CF3E
421F0F7B	C22E7F35	C233B3D8	C22AC1E3	4312FBE5	4222083F	C22CD70D	C23393DA	C22A7F50	43133328
42249A41	C22AFB24	C233665E	C22A5117	431366AE	42271303	C228FFCC	C23332EB	C22A1CF6	431399F7