DSC#753

SMM-XRP
SMM/XRP UNPROCESSED DATA ON 8MM
80-014A-04B

Table of Contents

1. Introduction

2. Errata/Change Log

3. LINKS TO RELEVANT INFORMATION IN THE ONLINE NSSDC INFORMATION SYSTEM

4. Catalog Materials

    a. Associated Documents

    b. Core Catalog Materials

---

1. INTRODUCTION:

The documentation for this data set was originally on paper, kept in NSSDC's Data Set Catalogs (DSCs). The paper documentation in the Data Set Catalogs have been made into digital images, and then collected into a single PDF file for each Data Set Catalog. The inventory information in these DSCs is current as of July 1, 2004. This inventory information is now no longer maintained in the DSCs, but is now managed in the inventory part of the NSSDC information system. The information existing in the DSCs is now not needed for locating the data files, but we did not remove that inventory information.

The offline tape datasets have now been migrated from the original magnetic tape to Archival Information Packages (AIP's).

A prior restoration may have been done on data sets, if a requestor of this data set has questions; they should send an inquiry to the request office to see if additional information exists.

2. ERRATA/CHANGE LOG:

NOTE: Changes are made in a text box, and will show up that way when displayed on screen with a PDF reader.

When printing, special settings may be required to make the text box appear on the printed output.

Version	Date	Person	Page	Description of Change
01				
02				

3 LINKS TO RELEVANT INFORMATION IN THE ONLINE NSSDC INFORMATION SYSTEM:

http://nssdc.gsfc.nasa.gov/nmc/

[NOTE: This link will take you to the main page of the NSSDC Master Catalog. There you will be able to perform searches to find additional information]

4. CATALOG MATERIALS:

a. Associated Documents To find associated documents you will need to know the document ID number and then click here.
http://nssdcftp.gsfc.nasa.gov/miscellaneous/documents/

b. Core Catalog Materials

SMM

XRP

SMM/XRP UNPROCESSED DATA ON 8MM

80-014A-04B SOXR-00038

THIS DATA SET CONSISTS OF 19 MAGNETIC TAPES. THE TAPES ARE 8MM CARTRIDGES, HIGH DENSITY, WRITTEN IN BINARY. THE C TAPES ARE 8MM ALSO, CREATED ON A VAX COMPUTER. THE D AND C NUMBERS ALONG WITH THEIR TIME SPANS ARE AS FOLLOWS:

D#	C#	FILES	TIMESPANS
D-107734	C-031569	17	02/15/80 - 03/02/80
D-107735	C-031570	33	03/01/80 - 04/02/80
D-107736	C-031571	32	04/01/80 - 05/02/80
D-107737	C-031572	33	05/01/80 - 06/03/80
D-107738	C-031573	32	06/01/80 - 07/03/80
D-107739	C-031574	33	07/01/80 - 08/03/80
D-107740	C-031575	33	08/01/80 - 09/03/80
D-107741	C-031576	32	09/01/80 - 10/03/80
D-107742	C-031577	33	10/01/80 - 11/03/80
D-107743	C-031578	26	11/01/80 - 11/27/80
D-107744	C-031579	17	04/16/84 - 05/30/84
D-107745	C-031580	33	07/01/85 - 08/02/85
D-107746	C-031581	32	06/01/84 - 07/02/84
D-107747	C-031582	34	06/30/84 - 08/02/84
D-107748	C-031583	34	07/31/84 - 09/02/84
D-107749	C-031584	32	09/01/84 - 10/02/84
D-107750	C-031585	33	10/01/84 - 11/02/84
D-107751	C-031586	33	10/31/84 - 12/02/84
D-107752	C-031587	33	12/01/84 - 01-02/85

*****SUPPORT DOCUMENTATION, DATA PROCESSING PLAN FOR SOLAR MAXIMUM MISSION-A (SMM-A), THIS DOCUMENT HAS BEEN MICROFICHE, B42245-000*****

See 5-48 for data format

X-565-78-20

B42245-000

DATA PROCESSING PLAN FOR SOLAR MAXIMUM MISSION-A (SMM-A)

HENRY G. LINDER

APRIL 1979

NASA
National Aeronautics and
Space Administration

Goddard Space Flight Center
Greenbelt, Maryland 20771

B42245-000

X-565-78-20

DATA PROCESSING PLAN

FOR

SOLAR MAXIMUM MISSION-A

(SMM-A)

Henry G. Linder
Information Processing Division

April 1979

GODDARD SPACE FLIGHT CENTER
Greenbelt, Maryland

DATA PROCESSING PLAN
FOR
SOLAR MAXIMUM MISSION-A
(SMM-A)

APPROVAL

Information Processing Division	Frank A. Keipert, Chief
Data Processing Branch	Alexander C. Rosenberg, Head
Telemetry Computation Branch	Michael Mahoney, Head
Data Processing Engineer	Henry G. Linder

GODDARD SPACE FLIGHT CENTER
Greenbelt, Maryland

DATA PROCESSING PLAN

FOR

SOLAR MAXIMUM MISSION - A
(SMM-A)

ACKNOWLEDGMENT

Appreciation is extended to all people who contributed toward the design, implementation, and checkout of the SMM-A data processing system. Special thanks are extended to Gregory Toth, Lillian Jamieson, Nathan Heifetz, Ronald Reeder, Abe Wilk, and Richard Carper.

DATA PROCESSING PLAN
FOR
SOLAR MAXIMUM MISSION-A
(SMM-A)

Henry G. Linder
Information Processing Division

ABSTRACT

This document describes the first Solar Maximum Mission objectives, experiments and experimenters, spacecraft configuration, spacecraft systems, orbit, telecommunications, and ground station operations. This document is principally concerned with the processing procedures used by the Information Processing Division to process telemetry data received from the Solar Maximum Mission-A. The division receives from the network stations telemetry data containing multiplexed spacecraft and experiment data. The data are received in digital form, edited and time annotated, decommutated, recorded on output tapes, and shipped to the SMM-A principal investigators for scientific analysis of the onboard experiments.

CONTENTS

Section		Page
1.0	INTRODUCTION	1-1
1.1	General	1-1
1.2	Mission Objectives	1-1
1.3	Scientific Experiments	1-2
1.3.1	Hard X-ray Imaging Spectrometer	1-2
1.3.2	High-resolution UV Spectrometer and Polarimeter	1-2
1.3.3	White-light Coronograph Polarimeter	1-4
1.3.4	X-ray Polychromator	1-4
1.3.5	Solar Gamma-ray Scintillator	1-4
1.3.6	Hard X-ray Burst Spectrometer	1-4
1.3.7	Total Solar Irradiance Monitor	1-4
1.4	Experimenters	1-4
2.0	SPACECRAFT DESCRIPTION	2-1
2.1	Configuration	2-1
2.2	Characteristics	2-4
2.3	Systems	2-6
2.3.1	Power Subsystem	2-6
2.3.2	Thermal Control System	2-7
2.3.3	Solar Array	2-7
2.3.4	Attitude Control Subsystem	2-7
2.4	Launch and Orbit	2-9
3.0	TELECOMMUNICATIONS	3-1
3.1	Data Handling	3-1
3.1.1	Tape Recorder	3-1
3.1.2	Radio Frequency System	3-2
3.1.3	Antenna Array	3-2
3.2	Command System	3-2
3.3	Project Data Formats	3-12
4.0	GROUND OPERATIONS	4-1
4.1	Data Acquisition	4-1
4.2	Communications System	4-3
4.2.1	Communications and Data Handling	4-3
4.2.2	Additional Special Requirements	4-3
5.0	DATA PROCESSING	5-1
5.1	Requirements	5-1
5.2	Production Processing	5-1

CONTENTS (continued)

Section			Page
	5.2.1	General	5-1
	5.2.2	Production Data Flow	5-2
	5.2.3	Input Processing and Transfer File Processing	5-2
	5.2.4	Telemetry Data Editing	5-12
		5.2.4.1 Edit Program Input Data	5-12
		5.2.4.2 Edit Program Output Data	5-13
	5.2.5	Experimenter Data Tapes	5-25
	5.2.6	Data Tape Format for HXIS Experiment	5-35
	5.2.7	Data Tape Format for UVSP Experiment	5-38
	5.2.8	Data Tape Format for WLCP Experiment	5-41
	5.2.9	Data Tape Format for XRP Experiment	5-47
	5.2.10	Data Tape Format for GRE Experiment	5-50
	5.2.11	Data Tape Format for HXRBS Experiment	5-53
	5.2.12	Data Tape Format for ACRIM Experiment	5-56
	5.2.13	Processing of HAO Video Data	5-59
	5.2.14	Shipment of Data Tapes	5-62
5.3	Quick-look Processing		5-65
	5.3.1	General	5-65
BIBLIOGRAPHY			B-1
GLOSSARY			G1-1

ILLUSTRATIONS

Figure		Page
1-1	Experiment Placement Aboard Spacecraft	1-3
2-1	SMM-A Spacecraft Configuration	2-2
2-2	Expanded View SMM-A Observatory	2-3
2-3	Delta Launch Vehicle/Spacecraft Separation Schematic	2-9
3-1	SMM-A Radio Frequency System	3-3
4-1	C&DH Subsystem Block Diagram Module Interface	4-6
5-1	SMM-A Data Flow for Production and Quick-look Processing	5-3
5-2	Data Flow under TELOPS Environment	5-4
5-3	Data Flow for Input Processing	5-5
5-4	SMM-A Project Data Format A, Real-time Data 16 kbps from Observatory	5-6
5-5	SMM-A Project Data Format D, F, H and J Playback Data 512 kbps from Observatory	5-7
5-6	Minor-frame Format	5-11
5-7	Pre-edit Transfer Tape Format	5-14
5-8	Nine-byte Header Format	5-15
5-9	Example of ITCS Input File	5-16
5-10	Edit Data File Format	5-17
5-11	Minor-frame Format of Edit File	5-20
5-12	Edit File Summary	5-22
5-13	Format of SMM-A Experimenter Data Tape	5-25
5-14	Sample External Labels	5-29
5-15	Tape Check Program Sample Output	5-31
5-16	Sample Shipping Letter	5-32
5-17	Format of Data File Summary Tape	5-34
5-18	Decommutation Format for HXIS Data File	5-35
5-19	Decommutation Format for UVSP Data File	5-38
5-20	Decommutation Format for WLCP Experiment Data File	5-41
5-21	Decommentation Format for WLCP Experiment Data File (Data Type = 8)	5-43
5-22	Decommutation Format for WLCP Experiment Data File	5-45
5-23	Decommutation Format for XRP Experiment Data File	5-47
5-24	Decommutation Format for GRE Experiment Data File	5-50
5-25	Decommutation Format for HXRBS Experiment Data File	5-53
5-26	Decommutation Format for ACRIM Experiment Data File	5-56
5-27	Production Tape Format for HAO Video Data File	5-60

ILLUSTRATIONS (continued)

Figure		Page
5-28	SMM Data Flow for Quick-look Processing	5-66
5-29	Format of Quick-look Data Tape for SMMOCC	5-67

TABLES

Table		Page
1-1	List of Experimenters	1-5
3-1	SMM-A Minor Frame Telemetry Format Mode 2 (Science Format)	3-5
3-2	Fixed Word Assignments	3-8
3-3	Frame Synchronization Pattern	3-9
3-4	Telemetry Assignments for the Command and Data Handling Subsystem	3-10
4-1	SMM-A Station Support Assignments	4-2
4-2	Telemetry Data Acquistion Requirements for TDRSS	4-4
4-3	Ground Communications	4-5
5-1	Spacecraft PDF Parameter Record	5-9
5-2	Pre-edit Flags	5-10
5-3	Edit Label Record Description	5-18
5-4	Major-frame Header	5-19
5-5	Format ID Definition	5-21
5-6	Edit Header Label for IIS	5-24
5-7	Data Set Label Record Description	5-26
5-8	TELOPS Decom IIS Header	5-30
5-9	SMM Data Tape Format for Hard X-ray Imaging Spectrometer	5-36
5-10	SMM Data Tape Format for UVSP Experiment (Marshall Space Flight Center) Experiment No. 2	5-39
5-11	SMM Data Tape Format for WLCP Experiment (High Altitude Observatory) Experiment No. 3	5-42
5-12	SMM Data Tape Format for WLCP Experiment (High Altitude Observatory) Experiment No. 3	5-44
5-13	SMM Data Tape Format for WLCP Experiment (High Altitude Observatory) Experiment No. 3	5-46
5-14	SMM Data Tape Format for XRP Experiment (Lockheed Palo Alto Research Laboratory) Experiment No. 4	5-48
5-15	SMM Data Tape Format for GRE Experiment (University of New Hampshire) Experiment No. 5	5-51
5-16	SMM Data Tape Format for HXRBS Experiment GSFC Experiment No. 6	5-54
5-17	SMM Data Tape Format for ACRIM Experiment JPL Experiment No. 7	5-57
5-18	Format for Data from HAO Dedicated Tape Recorder SMM Data Tape Format for WLCP Experiment (High Altitude Observatory)	5-61
5-19	Experimenter Tape Distribution	5-62

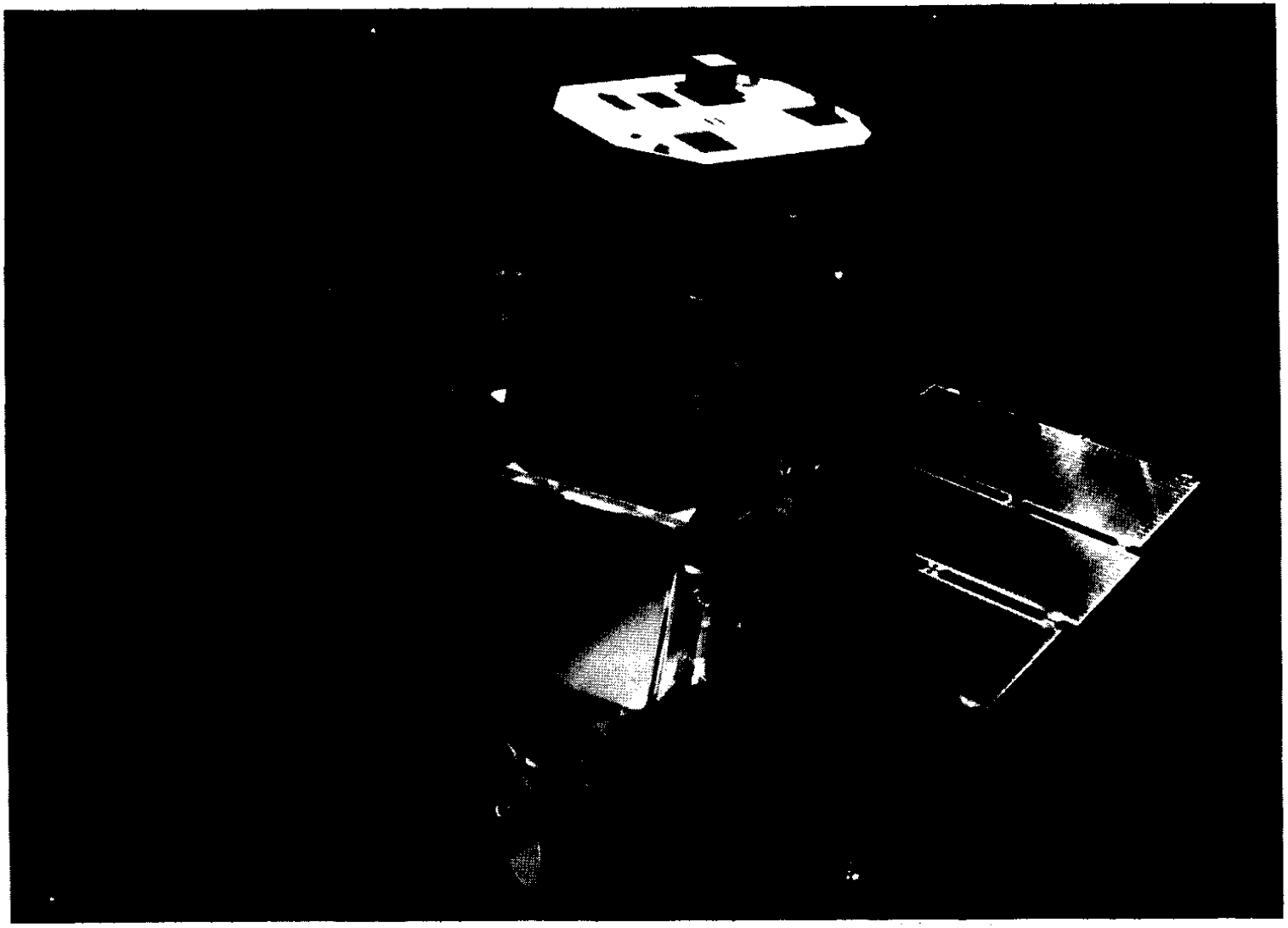

Frontispiece. SMM-A Spacecraft

SECTION 1

INTRODUCTION

DATA PROCESSING PLAN
FOR
SOLAR MAXIMUM MISSION-A
(SMM-A)

1. INTRODUCTION

1.1 GENERAL

The Solar Maximum Mission-A (SMM-A) has been developed to investigate solar flares, flare-related phenomena, and the total irradiance of the Sun, during the next period of maximum solar activity. The SMM-A observatory will observe flares and flare-induced effects in the chromosphere, chromosphere-corona transition region, and corona as manifested by changes in line emission, velocity, and magnetic field. The observatory will study the outer Lyman-Alpha corona and solar wind; and determine the fundamental physical characteristics of the solar plasma in the upper chromosphere, transition region, and inner corona before, during, and after solar flares. The characteristics to be measured or determined are electron temperature and density, flare plasma morphology, magnetic field configuration, material velocities, and relative abundances of elements. The SMM-A will also study coronal evolution at solar maximum and examine the coronal transient activity with particular emphasis on gaining knowledge of the electron density and the role of the coronal magnetic field both in response to the transient event. Further SMM-A observations will determine the temperature and density structure of high-energy flare plasma as a function of space and time and the extent to which the flare plasma departs from the thermal equilibrium, and determine the temperature and density structure of the related active regions, the changes induced by flaring, and the spatial relationship with the flare plasma.

Plans are in effect to launch SMM-A from the Kennedy Space Flight Center (ETR) in October 1979, using a Delta 3910 launch vehicle. The mission life is planned for a duration of at least 12 months.

1.2 MISSION OBJECTIVES

Specific mission objectives of the Solar Maximum Mission-A are:

A. Determine the fundamental characteristics of the solar plasma before, during, and after solar flares

B. Study coronal evolution at solar maximum

C. Determine the temperature density structure of high-energy flare plasma as a function of space and time

D. Investigate the position, structure, and thermodynamic properties of hot-thermal and nonthermal sources in flares

E. Investigate electron acceleration and very high temperature plasmas by observing high energy solar X-rays

F. Determine the spectral and temporal history of proton acceleration in flares from gamma-ray lines; and

G. Measure the total irradiance of the Sun.

The SMM-A mission will be the first NASA mission to employ the Multimission Modular Spacecraft (MMS). The Multimission Modular Spacecraft has been designed for direct support of a variety of intermediate to large automated Earth orbital missions.

1.3 SCIENTIFIC EXPERIMENTS

The SMM-A spacecraft will use seven experiments to meet the mission objectives. The experiments are discussed in detail in paragraphs 1.3.1 through 1.3.7. Experiment placement aboard the spacecraft is illustrated in Figure 1-1.

1.3.1 Hard X-ray Imaging Spectrometer

The Hard X-ray Imaging Spectrometer experiment will investigate the position, structure, and properties of hot-thermal and nonthermal sources in active regions and will cover the photon-energy range from 3.5 to 30 keV with spatial resolution of 8 arc-seconds square.

1.3.2 High-resolution UV Spectrometer and Polarimeter

The GSFC/MSFC Ultraviolet Spectrometer and Polarimeter experiment will study the physical conditions of the corona active regions and flares and observe line intensities and profiles in the range from 1100 to 3000 Å. Temperature, density, velocity, and magnetic field measurements will be obtained.

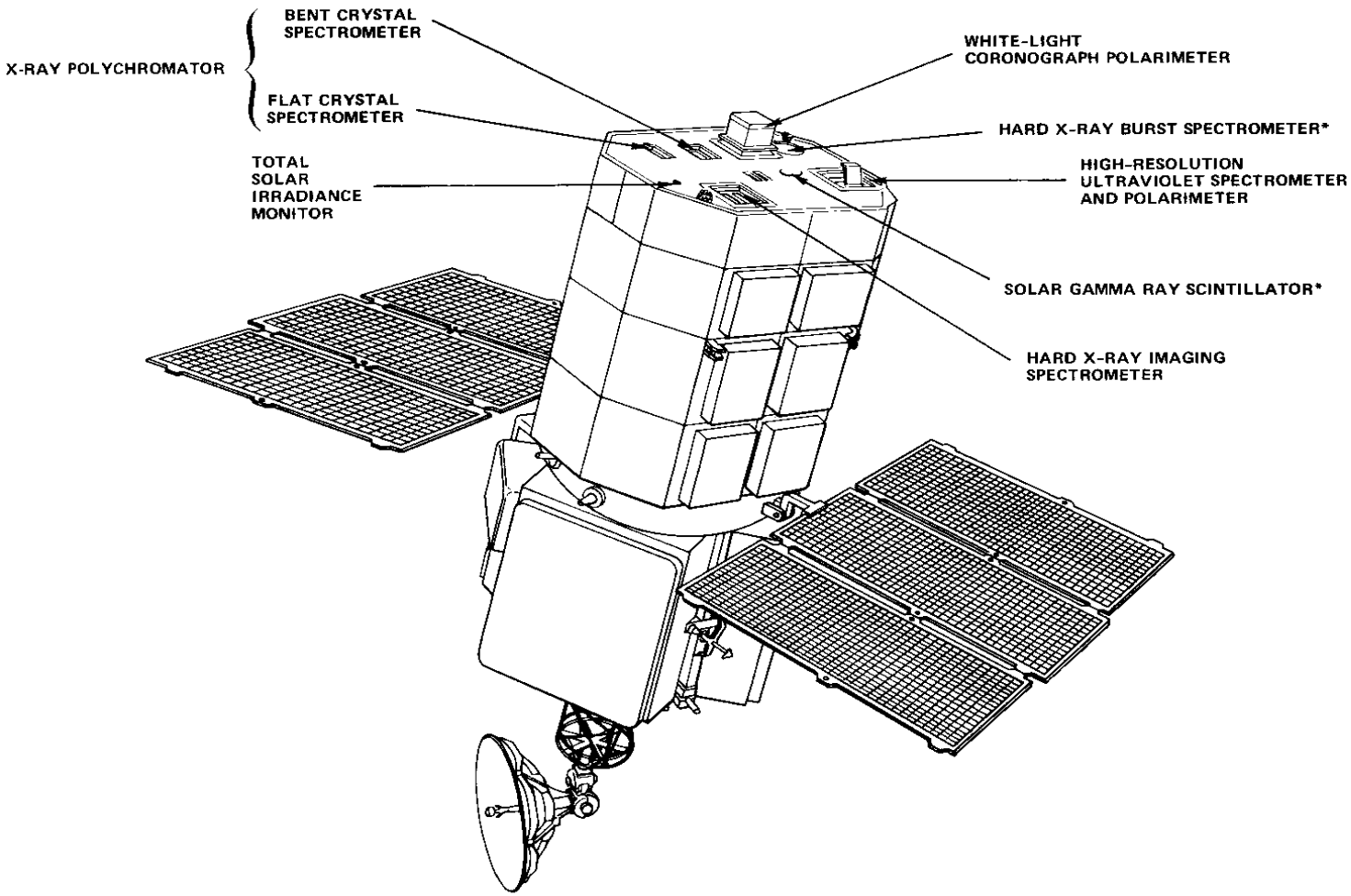

*THESE INSTRUMENTS HAVE NO APERTURE HOLE IN THE FORWARD CLOSEOUT. THEY VIEW THROUGH AN OPAQUE CLOSEOUT PLATE.

Figure 1-1. Experiment Placement Aboard Spacecraft

1.3.3 White-light Coronograph Polarimeter

The High Altitude Observatory White-Light Coronograph/Polarimeter will study coronal evolution at solar maximum with a measurement range from 3800 to 7000 Å. This experiment will also examine coronal transient activity, with particular emphasis on gaining knowledge of the electron density and the role of the coronal magnetic field both in, and in response to, the transient event.

1.3.4 X-ray Polychromator

The Soft X-ray Polychromator will determine the temperature and density structure of the flare plasma as a function of space and time with a measurement range from 1.59 to 22.4 Å; and will determine:

a) the extent to which the flare plasma departs from thermal equilibrium, and

b) temperature and density structure of the related active regions and changes induced by flaring.

1.3.5 Solar Gamma-ray Scintillator

The University of New Hampshire Gamma-ray Scintillator (spectrometer) will study solar gamma rays in the range from 10 KeV to 160 MeV to study dynamics of solar-flare/particle-acceleration phenomena, to identify specific ambient or transient nuclides and determine their abundance.

1.3.6 Hard X-ray Burst Spectrometer

The GSFC Hard X-ray Burst Spectrometer will investigate characteristics of electron acceleration in the solar-flare process in the range from 20 to 300 keV to determine the role that accelerated particles play in generation of the thermal phase of the flare process.

1.3.7 Total Solar Irradiance Monitor

The Total Solar Irradiance Monitor instrument will measure the total and spectral solar irradiance at wavelengths from far ultraviolet to far infrared with an absolute uncertainty approaching 0.1 percent in SI units, a precision of 0.02 percent and projected lifetime instrument uncertainty of less than ±0.2 percent.

1.4 EXPERIMENTERS

The SMM-A experimenters and their affiliation are listed in Table 1-1.

Table 1-1
List of Experimenters

Experiment	Principal Investigator	Affiliation
Hard X-ray Imaging Spectrometer	Dr. C. deJager	Space Research Laboratory, Utrecht
High-resolution UV Spectrometer and Polarimeter	Dr. E. Tandberg-Hanssen	NASA/Marshall Space Flight Center
White-light Coronograph Polarimeter	Dr. R. MacQueen	High Altitude Observatory
X-ray Polychromator	Dr. L. Acton	Lockheed Palo Alto Research Lab.
	Dr. J. L. Culhane	Mullard Space Science Laboratory, UCL
	Dr. A. Gabriel	Appleton Laboratory, Culham
Solar Gamma-ray Spectrometer	Dr. E. Chupp	University of New Hampshire
Hard X-ray Burst Spectrometer	Mr. K. Frost	NASA/Goddard Space Flight Center
Total Solar Irradiance Monitor	Dr. R. Willson	Jet Propulsion Laboratory

SECTION 2

SPACECRAFT DESCRIPTION

2.0 SPACECRAFT DESCRIPTION

2.1 CONFIGURATION

The SMM-A spacecraft consists of the Multimission Modular Spacecraft (MMS) Bus, mission unique components, and instruments (see Figure 2-1). The baseline configuration contains three subsystem modules supported by a Module Support Structure (MSS). A Transition Adapter (T/A) completes the structural elements. The structural system provides the necessary reaction/load paths for all lateral and thrust-axis induced inertial loads. The loads for a Delta vehicle are supported by the base of the MMS; the modules and MSS are cantilevered from the Transition Adapter, which has a capture drogue point that permits the shuttle Orbiter to capture and deploy the spacecraft. To accomplish its scientific objective, the SMM-A is equipped with a three-axis stabilized space observatory to meet the following requirements:

- Ability to point the optical axis of a telescope to any selected point on the solar disc (implies ±16 arc-min. pointing range in each of two axes)
- Pointing accuracy of ±5 arc-s about each of two axes
- Pointing stability of ±3.0 arc-s for more than 5 minutes in each of two axes
- Stabilization accuracy and knowledge of inertial attitude within 0.1° about the third axis (rotation about line-of-sight to Sun)
- Reorientation in response to attitude commands
- Maintenance of inertial attitude memory during orbit night and rapid reacquisition at orbit dawn.

The SMM-A observatory is divided into two major elements (see Figure 2-2):

- The Multimission Modular Spacecraft (MMS) Bus or the "service spacecraft'
- The Mission Uniques or the "Experiment Module."

The MMS spacecraft bus consists of the baseline configuration which consists of three subsystem modules supported by a Module Support Structure (MSS). A Transition Adapter (T/A) completes the structural elements. The structural system provides the necessary reaction/load paths for all lateral and thrust-axis-induced inertial loads. The inertial loads for a Space Transportation

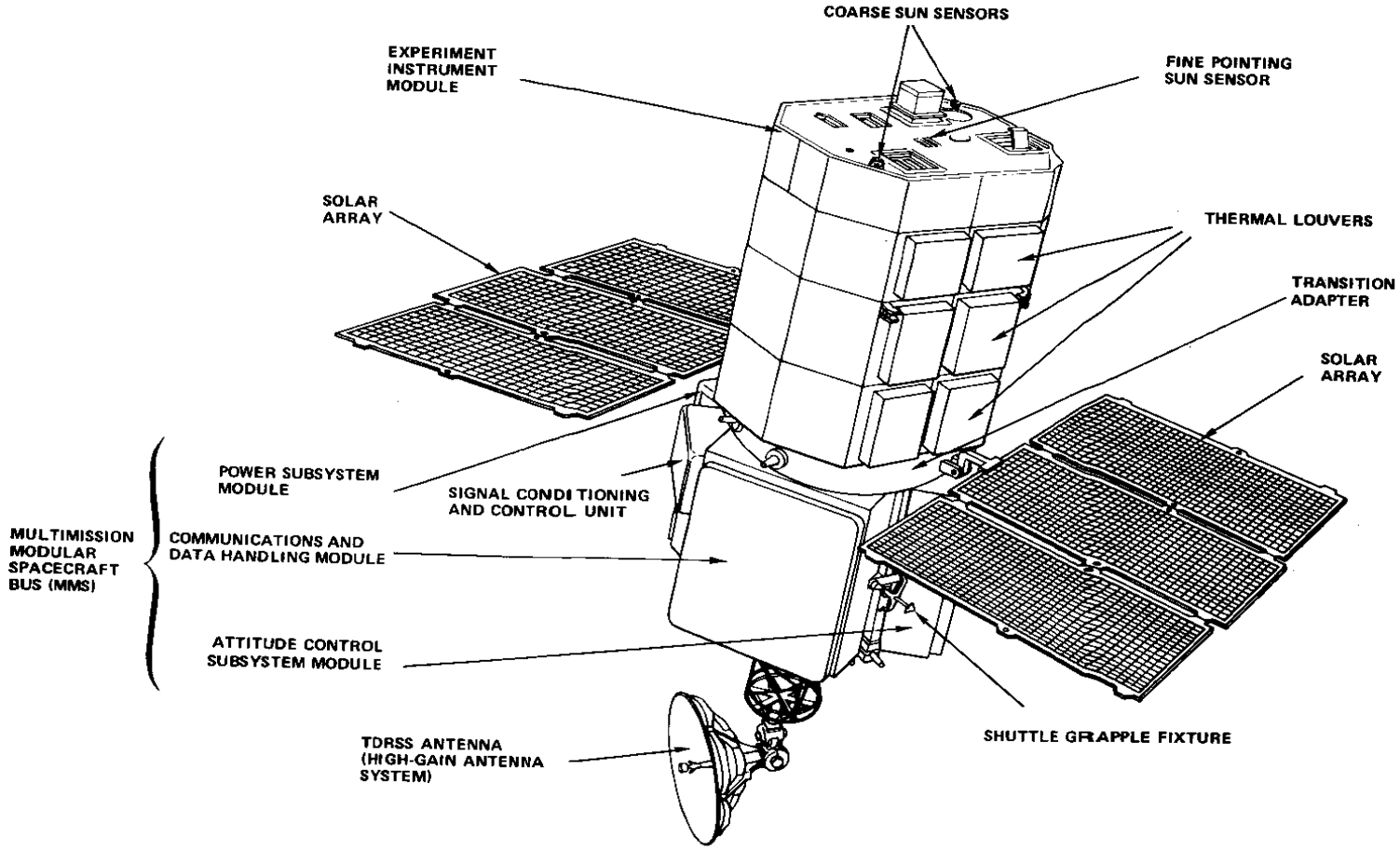

Figure 2-1. SMM-A Spacecraft Configuration

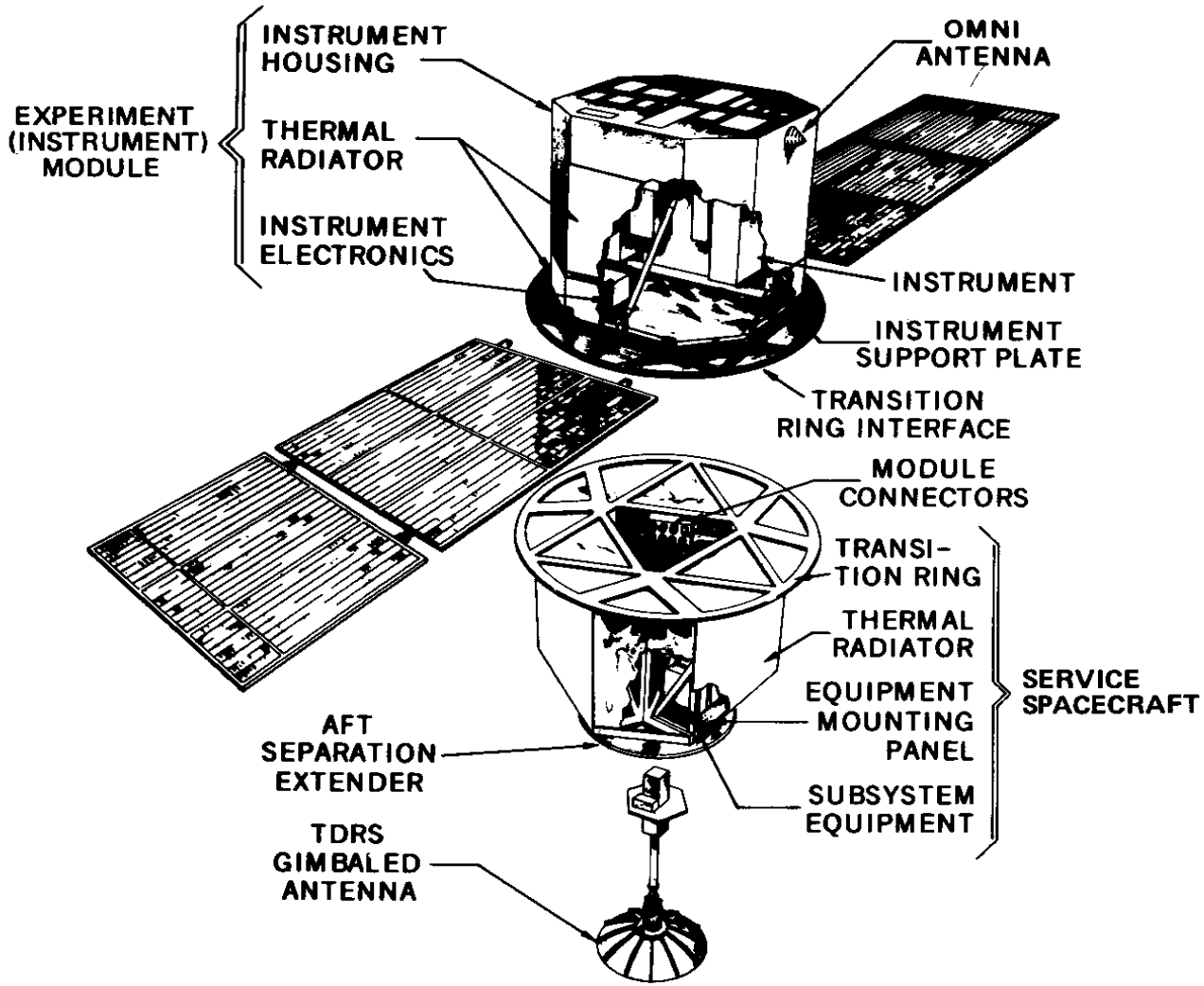

Figure 2-2. Expanded View SMM-A Observatory

System (STS) launch are supported by the T/A. Similarly, the loads for a Delta vehicle are supported by the base of the MMS. The modules and MSS are cantilevered from the T/A. The Transition Adapter has a capture drogue point that permits the shuttle Orbiter to capture and deploy the spacecraft.

The three spacecraft subsystem modules are the same size. They measure 46 cm (18 inches) deep, 122 cm (48 inches) high, and 122 cm (48 inches) wide. The front and side panels are constructed of 2.5-cm (1 inch) thick aluminum alloy honeycomb. A common hole pattern has been established to accommodate the attach points in addition to a set of universal internal gridwork of walls and frames. The front face of the module has a hole pattern for mounting thermal louvers. The modules are attached to the primary load-carrying structure. The total weight of the SMM observatory (MMS bus plus instrument module) will be approximately 4000 lbs. The subsystem modules are:

- Power Subsystem (see Section 2.3.1)
- Attitude Control Subsystem (see Section 2.3.4)
- Communications and Data Handling (see Section 4.2.1)

Mission-unique items for SMM are: instrument module, thermal subsystem, solar array, fine Sun sensor tape recorders (10^8 bits), three 20-Ah batteries, remote interface units, power switching unit, omni S-band antenna, Tracking and Data Relay Satellite System (TDRSS) antenna (HGAS), delta launch-vehicle adapter, and flight mission software. (Each of the mission-unique items are discussed in Sections 2.3, 3.1, and 4.1.)

2.2 CHARACTERISTICS

General

	kg
Spacecraft Weight	592.4 (1306 lbs)
Instrument Weight	567.5 (1251 lbs)
Mission Unique	103.9 (229 lbs)
Instrument Module	283.0 (624 lbs)
Total Observatory (Launch Configuration)	1580.8 (3485 lbs)

Spacecraft shape

Depth	46 cm (18")
Width	122 cm (48")
Height	122 cm (48")

Telemetry System

- Transmitter

Bandwidth	6 MHz
Power	5 watts
Modulation	PM (STDN); SQPSK

- Receiver

Bandwidth	6 MHz
Frequency stability	0.005%
Sensitivity	N/A
Tuning	Fixed phase lock to received signal

- Antenna

Frequency range	2.1 to 2.3 GHz
Polarization	RHCP (OMNI); LHCP (TDRSS)
Gain	-7 dBi (OMNI); +23/+9 dBi (TDRSS)
Beamwidth	4 (OMNI), 8 deg. (TDRSS)

Command System

- Receiver

Bandwidth	6 MHz
Frequency stability	0.005%
Sensitivity	.134 dBm
Tuning	fixed phase lock to receive signal

- Antenna

Frequency range	2.1 to 2.3 GHz
Polarization	RHCP (OMNI); LHCP (TDRSS)
Gain	-7 dBi (OMNI); +23/+9 dBi (TDRSS)
Beamwidth	4 (OMNI); 8 deg (TDRSS)

Tracking System

- Transmitter

Bandwidth	6 MHz
Power	5 watts
Modulation	PM (STDN); SQPSK (TDRSS)

- Receiver

Bandwidth	6 MHz
Frequency stability	0.005%
Sensitivity	.136 dBm

- Antenna

Frequency range	2.1 to 2.3 GHz
Polarization	RHCP (OMNI); LHCP (TDRSS)
Gain	-7 dBi (OMNI); +23/+9 dBi (TDRSS)
Beamwidth	4 (OMNI); 8 deg (TDRSS)

2.3 SYSTEMS

2.3.1 Power Subsystem

The power subsystem is an unregulated system operating at 28 ±7 Vdc negative ground. The primary source of power is a solar array consisting of deployable paddles mounted to the spacecraft structure. Power during eclipse is supplied by nickel-cadmium batteries that are connected to the load bus. The batteries are charged and discharged in parallel. Temperature-sensing resistors are built into the batteries to supply thermal information to the power-regulator unit to maintain the appropriate battery charge control voltage. The SMM-A satellite will carry three 20-Ah nickel-cadmium batteries of 22 cells each. Because the baseline MMS carries only two batteries, the requirement for a

third battery makes the third battery "mission unique." Thus, 60-Ah capacity will be provided as required with a design depth of discharge of 23.7 percent. A third electrode in each battery will monitor the overcharge condition of the battery. Adequate battery capacity must be included for: (a) powering the spacecraft for up to five orbits immediately after launch, and (b) sustaining nominal loads during the eclipses of approximately 36 minutes for 2 years. In addition to spacecraft loads, the power subsystem must be able to support up to 200 watts of daylight experiment power and up to 50 watts of nighttime experiment power.

The Power Switching Unit (PSU) contains the distribution busses that supply power to the payload and instrument platform heaters. Three completely redundant busses are provided—a quiet main bus, a pulse load bus, and a heater power bus. Fuse protection is provided on each output power bus. Current sensors are included in the PSU to monitor the current supplied by each of the three busses.

2.3.2 Thermal Control System

The thermal subsystem of the SMM experiment module uses heaters and appropriate surface coatings to maintain instrument and electronics temperature within acceptable limits. A thermal enclosure provides for a low-gradient heat sink for the instruments, which radiate directly to it. In addition, much of the instrument electronics will be mounted to the enclosure, thereby removing gradient-producing heat dissipators from the vicinity of the instrument support plate.

2.3.3 Solar Array

The solar paddles, which are electrically interfaced with the MMS power module, are flat panels that deploy to a fixed position. The arrays are externally mounted to the SMM transition-ring body and will provide approximately 1540 watts at end of life.

2.3.4 Attitude Control Subsystem

The SMM-A will be a three-axis stabilized spacecraft with the attitude controlled by onboard computer processing of sensor information to supply the appropriate updates to the reaction-wheel system. Control of solar pointing in two axes shall be maintained through the use of optical sensor updating of the inertially referenced servo control loops in azimuth and elevation. The primary function of the Attitude Control Subsystem (ACS) is to orient and stabilize the spacecraft relative to a desired target. The central control system element is an onboard computer that processes all sensor-derived information and, in conjunction with

various types of stored information, generates the appropriate control signals to operate the reaction control devices. The onboard computer, which is shared with other spacecraft subsystems, is physically located in the communication and data handling module. A backup control loop independent of the computer, is provided to ensure the capability of shuttle retrieval or resupply if anomalous behaviour of the computer occurs. With the exception of coarse Sun sensors and mission-unique fine-error sensors that are incorporated into payload instruments, all control sensors are housed in the ACS module.

All normal operational modes are implemented with the onboard computer. The ACS sensor complement consists of a high performance Inertial Reference Unit (IRU), a pair of strapped down (electronic scanning) star trackers, 2 three-axis magnetometer sets, and a complement of Sun sensors. The information generated by these sensors is available to the computer for supporting the various operational modes. The IRU errors are removed by means of rate and attitude correction factors developed in the onboard computer on the basis of information obtained from the optical sensors. The magnetometers are used to identify the relationship of the Earth's magnetic field relative to the spacecraft. This information is used with Sun-sensor attitude information to make attitude determinations, primarily in support of initial acquisition. The magnetometer data are also used with reaction-wheel speed data to excite magnetic torquers for continuously removing accumulated momentum from the reaction wheels. The Sun-sensor complement consists of two sets of coarse analog Sun sensors located on the thermal enclosure, one redundant fine pointing Sun sensor mounted on the instrument support plate, and one precision digital Sun sensor located in the ACS module. The Sun-sensor complement is as follows:

- A coarse Sun-sensor and a three-axis magnetometer shall provide data for coarse ($\pm 2°$ to $\pm 5°$) attitude information. Two star sensors will provide data for fine (1 arc-min.) attitude information. In addition, a fine-pointing Sun sensor (redundant unit provided) with 5 arc-second accuracy will be used for maintaining servo control of the spacecraft pitch and yaw axes.

- A Fine-Pointing Sun Sensor: Two Fine-Pointing Sun Sensors (one prime and one redundant) will provide attitude information in two orthogonal axes for solar pointing to an accuracy of 5 arc-seconds. They are to be mounted on a flat reference surface and provided with an optical cube for alignment. The null of the sensor shall be defined by the alignment cube. The center of the Sun may be defined as either the geometric centroid of the solar disk or the radiometric centroid in the spectral range of detector sensitivity. The sensor will resolve the angular off-set of the Sun center from the sensor null in two axes. Outputs will be

digital and will not be affected by Sun intensity variation. The Sun-sensor assemblies will be packaged into separate optics and electronic units.

2.4 LAUNCH AND ORBIT

The SMM-A spacecraft is to be launched in October, 1979, from the Kennedy Space Flight Center (ETR) and placed into a near-circular 574-km (310 nm) orbit with an inclination of 28.5°. A minimum scientific lifetime of one year is planned and subsequently the satellite is to be retrieved and returned to Earth by the NASA Space Shuttle in 1981.

The Delta launch-vehicle Separation Adapter is designed to interface with the Multimission Modular Spacecraft three-point mount. The Delta launch-vehicle is illustrated in Figure 2-3.

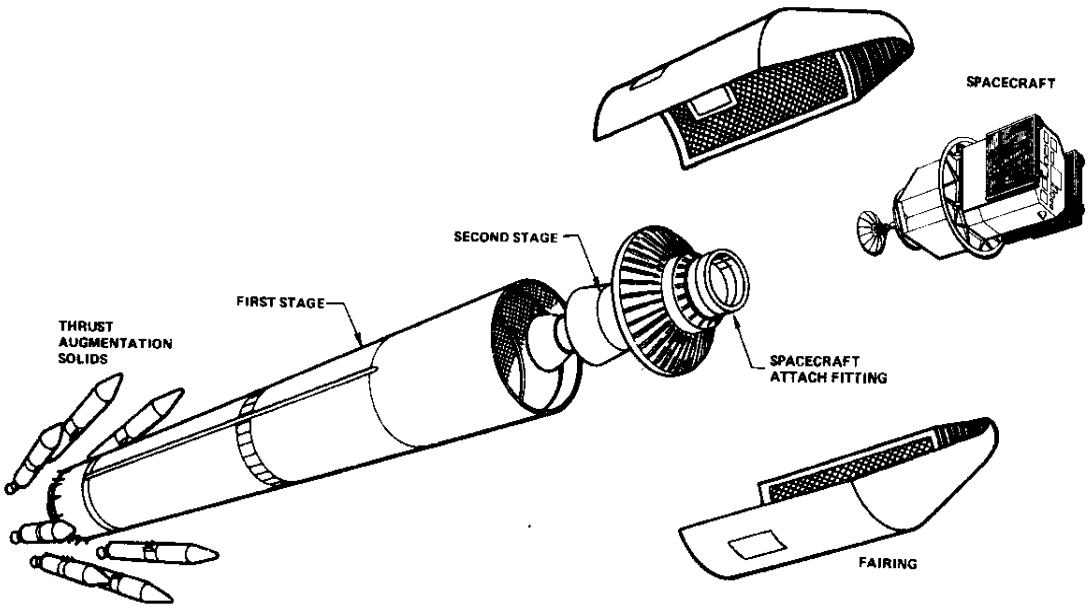

Figure 2-3. Delta Launch Vehicle/Spacecraft Separation Schematic

SECTION 3

TELECOMMUNICATIONS

3.0 TELECOMMUNICATIONS

3.1 DATA HANDLING

The SMM-A spacecraft will use NASA standard transponders to communicate with the Ground Station Tracking and Data Network (GSTDN). In addition, the SMM-A spacecraft has been designed to be compatible with the forthcoming Tracking and Data Relay Satellite System (TDRSS). Once TDRSS becomes operational, SMM-A spacecraft communications can be transmitted via TDRSS, or, directly between the spacecraft and the Ground Station Tracking and Data Network. An omni-type antenna system is used for links to GSTDN, and a mechanically steered directional antenna (as well as the omni) is used for links to TDRSS. The GSTDN command rate is 2 kbps, and the ranging system is the standard GSTDN system. TDRSS command rates are 125 and 1000 bps, and TDRSS ranging is by the TDRSS coded spread-spectrum. For both GSTDN and TDRSS, telemetry formats consist of 16 kbps (1 kbps with TDRSS is emergency mode) real-time telemetry alone or in combination with one of the following: computer dump at 32 kbps (1 kbps with TDRSS in emergency mode) spacecraft tape recorder playback at 512 kbps (might be reduced with TDRSS to 256 kbps because of link margins), HAO tape recorder playback at 512 kbps (might be reduced with TDRSS to 256 kbps because of link margins), or HAO real-time data at 256 kbps. TDRSS link telemetry is convolutionally encoded, and all communications operations are at the TDRSS multiple-access frequencies. Tape-recorder dumps via TDRSS require scheduling of single-access support. GSTDN stations that can support SMM will be utilized when required; during the early operations phase, more than one GSTDN contact per orbit will be scheduled as available. When normal operations are achieved, a minimum of one GSTDN contact per orbit will be required to accomplish routine command and data acquisition, but there will be unpredictable periods requiring more than one contact per orbit. These periods will generally occur when there is a rapid turnaround requirement to support solar flare activities and also when large command programs must be uplinked to the five onboard computers. During suspected solar flare activity, tape recorder dumps should be played back to the Experimenter Operations Facility (EOF) immediately after the station pass.

3.1.1 Tape Recorder

The SMM-A spacecraft will house two spacecraft tape recorders to provide onboard bulk data storage. Each recorder can store approximately four full orbits of telemetry data. A telemetry bit rate of 16 kbps for recording will be maintained. The NASA standard tape recorder currently being developed with a capacity of 4.5×10^8 bits meets all SMM requirements and has been selected for use on SMM-A. A third tape recorder is being provided for the dedicated use by the High Altitude Observatory (HAO) Instrument.

3.1.2 Radio Frequency System

The Radio Frequency (RF) combiner box permits commands to be received through either of the two antenna systems. Choice of a particular system is dependent on the High-Gain Antenna System (HGAS) pointing and polarization of the signal. In addition, the hybrid will ensure that no deep nulls occur in the region where the omni coverage hemispheres merge. A functional block diagram of the RF system, (including the HGAS, the RF combiner, and the Communications and Data Handling interface) is shown in Figure 3-1.

3.1.3 Antenna Array

- High-Gain Antenna System: The HGAS consists of a bi-axially gimbaled antenna and associated drive electronics. Antenna pointing is accomplished via commands from the onboard computer. Slewing rates will be controlled to minimize spacecraft attitude perturbations. The HGAS is an integral part in communicating via TDRSS.

- Omni S-Band Antenna: The S-band antenna system consists of a pair of S-band hemispheric coverage antennas mounted so that each antenna has 180-degree coverage in opposite hemispheres. The antenna pattern is expected to be uniform, except in the equatorial plane where the hemispheres meet; in this region nulls are expected to be no worse than -11 dB.

3.2 COMMAND SYSTEM

The command group for SMM-A is one segment of the spacecraft's communications and data handling equipment. Standard Telemetry and Command Components (STACC) will be used. The STACC design is based on the concept of remote multiplexing of telemetry data and remote distribution of commands. Command and telemetry data are routed to and from other spacecraft and instrument subsystems by a serial digital, multiplex data bus to minimize interconnections. When needed, signal conditioning of passive transducers is provided by a constant current source that is applied to the devices at the time of sampling. The standard predetermined science and engineering (one each) telemetry formats are controlled by read-only memories. In the event of failure during the mission, a new telemetry format may be generated by the onboard computer.

The basic command rate is a Shuttle-compatible 2000 bps with 48 bits per word. This rate will be used when commanding from STDN; however, command rates of 1000 and 125 bps are provided and will be used when commanding through TDRSS single-access and multiple-access channels.

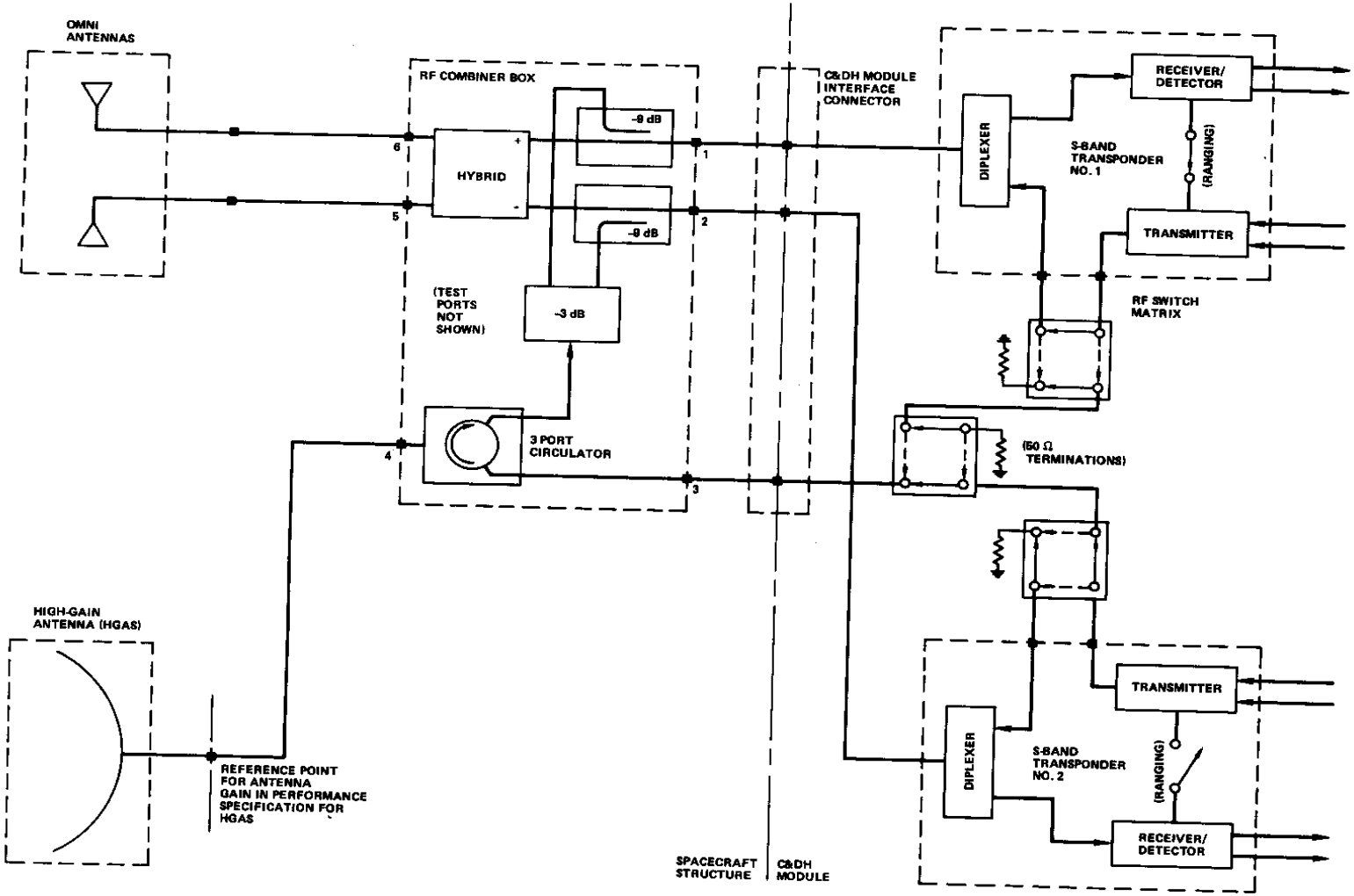

Figure 3-1. SMM-A Radio Frequency System

Tables 3-1 to 3-4 list the telemetry formats, and telemetry assignments for the Command and Data Handling System.

The Remote Interface Units (RIU) handle communications between the Central Unit (CU) of the Standard Telemetry and Command Components (STACC) and the instruments via Multiplex Data Bus (MDB). The CU transmits instruction messages to the RIU over a Supervisory Line. The RIU transmits data return messages over a Reply Line. The RIU, as instructed by the CU instruction message, will perform one of the following three functions:

(1) Decode and distribute commands to the instruments.

(2) Decode and distribute selected clock signals to the instruments.

(3) Accept, condition, format, and transmit instrument telemetry data. This includes supplying all necessary control and conditioning signals to the instrument to effect data transfer.

Table 3-1
SMM-A Minor Frame Telemetry Format Mode 2
(Science Format)

MINOR FRAME WORD NR.	DESCRIPTION	ID
00	FRAME SYNC WORD	CDH 01
01	FRAME SYNC WORD	CDH 01
02	FRAME SYNC WORD	CDH 01
03	TLM FORMAT, RATE & ID	CDH 56
04	SCIENCE DATA	HXIS 04
05	SCIENCE DATA	HXIS 04
06	SCIENCE DATA	HXRBS 22
07	SCIENCE DATA	HXRBS 23
08	UNASSIGNED	SMM
09	UNASSIGNED	SMM
10	SCIENCE DATA	XRP 01
11	SCIENCE DATA	XRP 01
12	DATA SOURCE 1	GRE 26
13	DATA SOURCE 1	GRE 26
14	SCIENCE DATA	HXIS 04
15	SCIENCE DATA	HXIS 04
16	FPSS 1 WORD 1	SACS 01
17	FPSS 1 WORD 2	SACS 02
18	FPSS 1 WORD 3	SACS 03
19	FPSS 1 WORD 4	SACS 04
20	SCIENCE DATA	HXIS 04
21	SCIENCE DATA	HXIS 04
22	PHOTODIODE 1	HXIS 24
23	ANE STATUS 3	HXIS 07
24	SCIENCE DATA	HXIS 04
25	SCIENCE DATA	HXIS 04
26	SCIENCE DATA	XRP 01
27	DMA ADDRESS	UVSP 05
28	DMA DATA	UVSP 06
29	STATUS MONITOR	UVSP 07
30	DATA BUS 2	UVSP 01
31	DATA BUS 2	UVSP 01
32	SUBCOMMUTATOR NR 1	CDH 06
33	SUBCOMMUTATOR NR 2	CDH 07
34	RECEIVER STATUS	CDH 12
35	OBC DATA WORD ID	OBC 01
36	SCIENCE DATA	HXIS 04
37	SCIENCE DATA	HXIS 04
38	SCIENCE DATA	HXRBS 24
39	SCIENCE DATA	HXRBS 25
40	SCIENCE DATA	HXIS 04

Table 3-1 (continued)

MINOR FRAME WORD NR.	DESCRIPTION	ID
41	SCIENCE DATA	HXIS 04
42	SCIENCE DATA	XRP 01
43	SCIENCE DATA	XRP 01
44	DATA SOURCE 1	GRE 26
45	DATA SOURCE 1	GRE 26
46	SCIENCE DATA	HXIS 04
47	SCIENCE DATA	HXIS 04
48	FPSS 2 WORD 1	SACS 05
49	FPSS 2 WORD 2	SACS 06
50	FPSS 2 WORD 3	SACS 07
51	FPSS 2 WORD 4	SACS 08
52	SCIENCE DATA	HXIS 04
53	SCIENCE DATA	HXIS 04
54	SCIENCE DATA	HXRBS 26
55	SCIENCE DATA	HXRBS 27
56	SCIENCE DATA	HXIS 04
57	SCIENCE DATA	HXIS 04
58	SCIENCE DATA	XRP 01
59	SCIENCE DATA	XRP 01
60		
61		
62	DATA BUS 3	UVSP 02
63	DATA BUS 3	UVSP 02
64	S/C CLOCK BITS 7-0	CDH 02
65	FRAME COUNTER	CDH 03
66	CMD COUNTER (SELECTED CU)	CDH 04
67	DWELL MODE & CHANNEL ID	CDH 05
68	SCIENCE DATA	HXIS 04
69	SCIENCE DATA	HXIS 04
70	SCIENCE DATA	HXRBS 28
71	SCIENCE DATA	HXRBS 29
72	SCIENCE DATA	HXIS 04
73	SCIENCE DATA	HXIS 04
74	SCIENCE DATA	XRP 01
75	SCIENCE DATA	XRP 01
76	DATA SOURCE 2	GRE 27
77	DATA SOURCE 3	GRE 28
78	SCIENCE/HSKPG SUBCOM	WLCP 10
79	SCIENCE DATA	HXIS 04
80	OBC DATA WORD 1	OBC 02

Table 3-1 (continued)

MINOR FRAME WORD NR.	DESCRIPTION	ID
81	OBC DATA WORD 2	OBC 03
82	OBC DATA WORD 3	OBC 04
83	OBC DATA WORD 4	OBC 05
84	SCIENCE DATA	HXIS 04
85	SCIENCE DATA	HXIS 04
86	S/C CLOCK BITS 15-8	SMM
87	S/C CLOCK BITS 23-16	SMM
88	SCIENCE DATA	HXIS 04
89	SCIENCE DATA	HXIS 04
90	SCIENCE DATA	HXIS 04
91	SCIENCE DATA	HXIS 04
92	SCIENCE DATA	HXIS 04
93	SLLRA (COMP SHLD)	HXRBS 34
94	DATA BUS 2	UVSP 03
95	DATA BUS 2	UVSP 03
96	SUBCOMMUTATOR NR 3	CDH 08
97	SUBCOMMUTATOR NR 4	CDH 09
98	SUBCOMMUTATOR NR 5	CDH 10
99	SUBCOMMUTATOR NR 6	CDH 11
100	SCIENCE DATA	HXIS 04
101	SCIENCE DATA	HXIS 04
102	SCIENCE DATA	HXRBS 30
103	SCIENCE DATA	HXRBS 31
104	SCIENCE DATA	HXIS 04
105	SCIENCE DATA	HXIS 04
106	SCIENCE DATA	XRP 01
107	SCIENCE DATA	XRP 01
108	SCIENCE DATA	ACRIM 01
109	SUBCOM WORD	XRP 02
110	SCIENCE DATA	HXIS 04
111	SCIENCE DATA	HXIS 04
112	OBC DATA WORD 5	OBC 06
113	OBC DATA WORD 6	OBC 07
114	OBC DATA WORD 7	OBC 08
115	OBC DATA WORD 8	OBC 09
116	SCIENCE DATA	HXIS 04
117	SCIENCE DATA	HXIS 04
118	SCIENCE DATA	HXRBS 32
119	SCIENCE DATA	HXRBS 33
120	SCIENCE DATA	HXIS 04
121	SCIENCE DATA	HXIS 04
122	SCIENCE DATA	XRP 01
123	SCIENCE DATA	XRP 01
124		
125		
126	DATA BUS 3	UVSP 04
127	DATA BUS 3	UVSP 04

Table 3-2
Fixed Word Assignments

Word No.	Bit No.	FUNCTION	DEFINITION	
0-2		FRAME SYNC WORDS	SEE TABLE 3-3	
3	0,1,2	BIT RATE	SEE TABLE 3-3	
	3,4	FORMAT ID	SEE TABLE 3-3	
	5	CENTRAL UNIT A/B	SEE TABLE 3-3	
	6	R/T OR OBC DUMP DATA	SEE TABLE 3-3	
	7	CU SIGNAL PRESENCE	SEE TABLE 3-3	
32		SUBCOM NR 1		
33		SUBCOM NR 2		
34	0	RCVR A LOCK STATUS	0= UNLOCKED	1= LOCKED
	1	RCVR A TDRSS/GSTDN MODE	0= STDN	1= TDRSS
	2	RCVR B LOCK STATUS	0= UNLOCKED	1= LOCKED
	3	RCVR B TDRSS/GSTDN MODE	0= GSTDN	1= TDRSS
	4	DET A LOCK STATUS	0= LOCKED	1= UNLOCKED
	5	DET B LOCK STATUS	0= LOCKED	1= UNLOCKED
	6	CU A COMMAND REJECT	0= ACCEPT	1= REJECT
	7	CU B COMMAND REJECT	0= ACCEPT	1= REJECT
35		OBC DATA WORD ID		
64		S/C CLOCK (8 LSB OF SEL CU)	1 BIT = 1.024 SEC	
65		FRAME COUNTER (0-127)	1 BIT = 64 MS (1 MINOR FRAME at 16 KBPS) (1.024 SEC AT 1 KBPS)	
66		COMMAND COUNTER (0-255) (OF SELECTED CU)		
67	0	DWELL MODE STATUS	0= OFF	1= ON
	1-7	DWELL CHANNEL ID (0-127)		
96-99		SUBCOMS 3-6		

Table 3-3
Frame Synchronization Pattern

MINOR FRAME WORD NUMBER	BIT NUMBER	BIT STATE	DEFINITION
WORD 0	0	1	FRAME SYNC
	1	1	FRAME SYNC
	2	1	FRAME SYNC
	3	1	FRAME SYNC
	4	1	FRAME SYNC
	5	0	FRAME SYNC
	6	1	FRAME SYNC
	7	0	FRAME SYNC
WORD 1	0	1	FRAME SYNC
	1	1	FRAME SYNC
	2	1	FRAME SYNC
	3	1	FRAME SYNC
	4	0	FRAME SYNC
	5	0	FRAME SYNC
	6	1	FRAME SYNC
	7	1	FRAME SYNC
WORD 2	0	0	FRAME SYNC
	1	0	FRAME SYNC
	2	1	FRAME SYNC
	3	0	FRAME SYNC
	4	0	FRAME SYNC
	5	0	FRAME SYNC
	6	0	FRAME SYNC
	7	0	FRAME SYNC
WORD 3	012	000	BIT RATE- 1 KBPS
	012	001	BIT RATE- 2 KBPS
	012	010	BIT RATE- 4 KBPS
	012	011	BIT RATE- 8 KBPS
	012	100	BIT RATE- 16 KBPS (SMM-A REAL-TIME DATA)
	012	101	BIT RATE- 32 KBPS
	012	110	BIT RATE- 64 KBPS
	012	111	BIT RATE-128 KBPS (NOT USED ON SMM)
	34	00	HAO R/T OR T/R DATA (SMM ONLY)
	34	01	FORMAT ID ROM ENGINEERING FORMAT
	34	10	FORMAT ID ROM SCIENCE FORMAT
	34	11	FORMAT ID OBC FLEXIBLE FORMAT
	5		CENTRAL UNIT A/B 0=A 1=B
	6		R/T OR OBC DUMP 0=OBC 1=R/T
	7		CU DECODER CH A 0=NO REJ 1=REJECT

Table 3-4
Telemetry Assignments for the Command and Data Handling Subsystem

User ID	Telemetry Function Description	Minor Frame Word	
		Mode 1	Mode 2
CDH 01	MF SYNC 8 MSB	00	00
	8 NEXT MSB	01	01
	8 LSB	02	02
CDH 02	S/C CLOCK 8 MSB	96 (81)	96 (81)
			87
	S/C CLOCK 8 NEXT MSB	97 (81)	97 (81)
			86
	S/C CLOCK 8 LSB	64	64
CDH 03	MINOR FRAME COUNTER	65	65
CDH 04	CMD COUNTER SELECTED CU	66	66
CDH 05	DWELL MODE ID & CH	67	67
CDH 06	SUBCOM 1 SMM	32	32
CDH 07	SUBCOM 2 SMM	33	33
CDH 08	SUBCOM 3 MMS	96	96
CDH 09	SUBCOM 4 MMS	97	97
CDH 10	SUBCOM 5 MMS	98	98
CDH 11	SUBCOM 6 SMM	99	99
CDH 12	BILEVEL WORD 010 (RCVR STATUS)	34	34
CDH 13	BILEVEL WORD 020	96 (120)	96 (120)
CDH 14	BILEVEL WORD 040	97 (120)	97 (120)
CDH 15	BILEVEL WORD 050	98 (120)	98 (120)
CDH 16	BILEVEL WORD 060	96 (121)	96 (121)
CDH 17	BILEVEL WORD 070	97 (121)	97 (121)
CDH 18	BILEVEL WORD 110	96 (37)	96 (37)
		96 (103)	96 (103)
		111	
CDH 19	BILEVEL WORD 130	98 (121)	98 (121)
		88	
CDH 20	BILEVEL WORD 140	96 (122)	96 (122)
CDH 21	BILEVEL WORD 150	97 (122)	97 (122)
CDH 22	BILEVEL WORD 160	98 (122)	98 (122)
CDH 23	BILEVEL WORD 170	96 (123)	96 (123)

Table 3-4 (continued)

User ID	Telemetry Function Description	Minor Frame Word	
		Mode 1	Mode 2
CDH 24	PMP A STATUS	96 (78)	96 (78)
CDH 25	PMP B STATUS	97 (78)	97 (78)
CDH 26	PMP TEMP	98 (35)	98 (35)
CDH 27	CU A TEMP	98 (80)	98 (80)
CDH 28	CU B TEMP	98 (81)	98 (81)
CDH 29	PCU TEMP	98 (36)	98 (36)
CDH 30	RIU A TEMP	96 (83)	96 (83)
CDH 31	RIU B TEMP	96 (84)	96 (84)
CDH 32	RIU A/B INTRA TEMP	96 (80)	96 (80)
CDH 33	STINT A TEMP	97 (83)	97 (83)
CDH 34	STINT B TEMP	97 (84)	98 (84)
CDH 35	STINT A STATUS	98 (83)	98 (83)
CDH 36	STINT B STATUS	98 (84)	98 (84)
CDH 37	STBY CU CMD COUNTER	96 (82)	96 (82)
		91	
CDH 38	XPNDR A TCXO TEMP	96 (36)	96 (36)
CDH 39	XPNDR A PWR AMP TEMP	98 (33)	98 (33)
CDH 40	XPNDR A AGC LEVEL	96 (38)	96 (38)
		96 (104)	96 (104)
		89	
CDH 41	XPNDR A RF FWD PWR	96 (34)	96 (34)
CDH 42	XPNDR A RF REF PWR	96 (35)	96 (35)
CDH 43	XPNDR B TCXO TEMP	97 (36)	97 (36)
CDH 44	XPNDR B PWR AMP TEMP	98 (34)	98 (34)
CDH 45	XPNDR B AGC LEVEL	97 (38)	97 (38)
		97 (104)	97 (104)
		90	
CDH 46	XPNDR B RF FWD PWR	97 (34)	97 (34)
CDH 47	XPNDR A RF REF PWR	97 (35)	97 (35)
CDH 48	MOD TEMP +X MEM 4 & 5	97 (79)	97 (79)
CDH 49	MOD TEMP +Y	97 (80)	97 (80)
CDH 50	MOD TEMP -Y	98 (79)	98 (79)
CDH 51	+28V UNREG BUS	97 (37)	97 (37)
		97 (103)	97 (103)
		92	
CDH 52	MEM 0 & 3 INTRA TEMP	96 (79)	96 (79)
CDH 53	CU A FLEX FORM LOAD/VERIFY	97 (82)	97 (82)
CDH 54	CU B FLEX FORM LOAD/VERIFY	98 (82)	98 (82)
CDH 55	TLM RATE, FORMAT, ID	03	03

3.3 PROJECT DATA FORMATS

The project data formats (PDF's) for SMM-A are as follows:

- PDF-A is designed to contain real-time 16 kbps data in a forward direction.

- PDF-B handles the 32 kbps onboard computer data dump, and is sent simultaneously with format A in a forward direction to GSFC.

- PDF-C handles High Altitude Observatory (HAO) real-time data at 256 kbps, as a backup mode of operation in the event that the HAO recorder becomes inoperative. These data will be input to the Digital Data Processing System (DDPS) at 128 kbps and transmitted to GSFC in the forward direction.

- PDF-D contains spacecraft recorder dump data at 512 kbps (these data will be analog recorded and input to the DDPS at 128 kbps, and transmitted to GSFC in reverse order).

- PDF-E contains HAO recorder dump data at 512 kbps (these data will be analog recorded and input to the DDPS at 128 kbps, and transmitted in reverse order).

- PDF-F contains spacecraft recorder dump data, with the same characteristics as PDF-D except the transfer to DDPS is at 256 kbps.

- PDF-G's HAO recorder dump data have the same characteristics as PDF-E except the transfer to DDPS is at 256 kbps.

- PDF-H will contain spacecraft recorder dump data at 512 kbps (data will be analog recorded and played back in reverse order at a 12:1 reduced speed from the recorder). The playback data rate of the analog tape will be 42.666 kbps.

- PDF-I contains HAO recorder dump data at 512 kbps (data will be analog recorded and played back in reverse order at 12:1 reduced speed from the recorder; the playback data rate of the analog type will be 42.666 kbps).

- PDF-J contains spacecraft recorder dump data at 512 kbps (data will be analog recorded and played back in reverse order at 6:1 reduced speed from the recorder). The playback data rate of the analog tape will be 85.333 kbps.

- PDF-K contains HAO recorder dump data at 512 kbps (data will be analog recorded and played back in reverse order at 6:1 reduced speed from the recorder). The playback data rate of the analog tape will be 85.333 kbps.

- PDF-L will be real-time data at 1 kbps. This is an emergency format and will be used to sync the OBC dump in the event it gets out of main frame sync with the real-time 16 kbps data (data will be in a forward direction and should be transmitted off station of 1 block per second).

PDF's C, D, and E can be direct from an analog tape or from digital tapes.

SECTION 4

GROUND OPERATIONS

4.0 GROUND OPERATIONS

4.1 DATA ACQUISITION

The Networks Directorate (ND) support facilities, which include the Ground Spaceflight Tracking and Data Network (GSTDN) and ground communications between NASA supporting facilities, will be responsible for data acquisition, tracking, and command support requirements. Support by the GSTDN stations is contingent on the operational availability of the specified stations during station simulations and during the mission. Because of circumstances beyond the control of the ND, some stations may not be available; however, the GSTDN configurations existing at the time will be used. Tracking, data acquisition, and command transmissions will be scheduled by the Network Operations Control Center (NOCC).

The NOCC will provide operational control of the GSTDN stations in meeting the spacecraft mission requirements of the ND. The NOCC will monitor station status and determine the availability of network resources for scheduling tracking, telemetry data acquisition, and command activities of the STDN stations. These activities will be scheduled in accordance with station capabilities and scheduling requests received from the SMM OCC.

The STDN stations assigned to support SMM-A, and the area of support for which they are responsible, are provided in Table 4-1. Mission support requirements for GSTDN for the first several months of mission are:

- All GSTDN stations that can support SMM will be utilized when required.

- During the early operations phase, more than one GSTDN contact per orbit will be scheduled as available and required.

- When normal operation is achieved, a minimum of one GSTDN contact per orbit will be required to accomplish routine command and data acquisition, but there will be unpredictable periods requiring more than one contact per orbit. These periods will generally occur when there is a rapid turnaround requirement to support solar flare activities and also when large command programs must be uplinked to the five on-board computers. When the phaseover to TDRSS operations becomes acceptable and complete, it can be assumed that GSTDN support will no longer be required on a routine basis. However, if for any reason TDRSS support is reduced below an acceptable level, then backup or emergency support from GSTDN will be required.

Table 4-1
SMM-A Station Support Assignments

Station	Assignments							
	Delta LV		SC Launch/Early Orbit			SC Mission Orbit		
	S-band TLM	C-band TRK	S-band TLM	S-band CMD	S-band TRK	S-band TLM	S-band CMD	S-band TRK
ACN	X	-	X	X	X	X	X	X
AGO	-	-	X	X	X	X	X	X
BDA	X	X	X	X	X	X	X	X
GDS	-	-	X	X	X	X	X	X
GWM	-	-	X	X	X	X	X	X
HAW	-	-	X	X	X	X	X	X
MAD	-	-	X	X	X	X	X	X
MIL	X	-	X	X	X	X	X	X
ORR	-	-	X	X	X	X	X	X
QUI	-	-	X	X	X	X	X	X
TDRS	-	-	-	-	-	X	X	X

Telemetry data acquisition requirements for the Tracking and Data Relay Satellite System (TDRSS) are illustrated in Table 4-2.

4.2 COMMUNICATIONS SYSTEM

The ground communication services provided to selected GSTDN stations, and the project/experimenter unique circuits and facilities are provided by the NASA Communications (NASCOM) Division. The project-unique circuits, and the ground communications service to the GSTDN stations are listed in Table 4-3.

4.2.1 Communications and Data Handling

The Communications and Data Handling (C&DH) for the Multimission Modular Spacecraft (MMS) provides a means for ground and onboard control of all spacecraft and sensor functions and for retrieval of spacecraft housekeeping and sensor data. This subsystem consists of the communications equipment (i.e., RF transmitters and receivers) and data handling equipment that is composed of a command group, a telemetry group, an onboard computer (OBC), and an oscillator with stability characteristics of six parts (or better) in 10^8 per day. Redundancy is provided in the basic subsystem by standby spare equipment. Three tape recorders are flown on SMM. Communication with the spacecraft is achieved through use of omnidirectional (GSTDN operations) and directional (TDRSS operations) antennas and the NASA standard STDN/TDRSS transponder. A functional block diagram of the C&DH subsystem is illustrated in Figure 4-1.

4.2.2 Additional Special Requirements

The High Altitude Observatory (HAO) instrument will generate four unique telemetry formats as follows (production data processing by IPD are required for all four formats):

- Dwell-mode Format. The spacecraft telemetry system could be operated in the HAO dwell mode an estimated one orbit per calendar day. Because two orbits of data could be dumped per playback, both normal and dwell-mode data will be contained in a single tape-recorder playback.

- Instrument Tape-recorder Format. The HAO instrument will have a dedicated tape recorder (identical to the spacecraft recorders) for storing and playing back solar corona images. It is planned to fill this tape recorder once or twice per calendar day, which will require two (or four) GSTDN passes for playback. The HAO data will be recorded in bursts ranging in duration from 3.6 to 30 seconds. Playback is in reverse time order at 512 kbps for both GSTDN and TDRSS operations.

Table 4-2
Telemetry Data Acquisition Requirements for TDRSS

Channel Frequency	Channel Data Rate	Support Interval (Time, position or flight phase)	Real-Time Requirement	Purpose and Remarks
2287.50 MHz	Carrier 16 kbps	One station pass per orbit	Control Center and Experiment Operations Facility	Control of Spacecraft and Experiments
2287.50 MHz	1.024-MHz 32 kbps	One station pass per orbit (duration of dump is several seconds)	Control Center	Dump of onboard computer status buffer for reporting of OBC activities and verification of uplinked programs and/or loads
2287.50 MHz	1.024-MHz subcarrier 512 kbps	One station pass every orbit (duration of a one-orbit dump is approximately 3.3 minutes)	None	Dump of spacecraft tape recorders
2287.50 MHz	1.024-MHz subcarrier 512 kbps	Minimum of two station (four desired) passes per calendar day (duration of a dump is approximately 7.5 minutes)	None	Dump of HAO instrument tape recorder. Production data processing consists of the data capture function.
2287.50 MHz	1.024-MHz 256 kbps	TBD, backup only in the event of failure of the HAO tape recorder	None	Real-time readout of HAO image data. The HAO tape recorder is by passed and data are acquired during real-time passes only. Production data processing is required and consists of the data capture function
2287.50 MHz	"1" channel 16 kbps	Minimum 30 minutes/orbit every orbit	Control Center and Experiment Operations Facility	Real-time data for control of spacecraft and experiments
2287.50 MHz	"Q" channel 32 kbps	Approximately several seconds per orbit every orbit	Control Center only	Dump of onboard computer for reporting of computer-controlled activities and verification of uplinked programs and/or loads
2287.50 MHz	"Q" channel 512 kbps	Approximately 20 minutes of single access service every four orbits (duration of tape recorder dump is approximately 15 minutes) is required	IPD and Experiment Operations Facility	Dump of spacecraft tape recorder.
2287.50 MHz	"Q" channel 512 kbps	Minimum of 20 minutes (40 minutes desired) of single access service per calendar day is required.	IPD and Experiment Operations Facility	Dump of HAO instrument tape recorder
2287.50 MHz	"1" and "Q" channels 1.0 kbps	As required	Control Center only	Emergency mode only due to loss of SMM high-gain antenna pointing
2287.50 MHz	"Q" channel 256 kbps	TBD, backup only in the event of failure of the HAO tape recorder	IPD and Experiment Operations Facility	Real-time readout of HAO image data

Table 4-3
Ground Communications

Type of Service	Location of Operating Terminals	Bandwidth	Data Rates	Purpose
Wideband	Selected STDN stations-GSFC	56 kbps three channels	16 kbps 32 kbps 128 kbps	Real-time data OBC dump data Tape recorder play-back data (post pass)
Wideband	TDRSS-GSFC	1.544 Mbps one channel	16 kbps 32 kbps 512 kbps 512 kbps	Real-time data OBC dump data HAO tape recorder data S/C tape recorder data
*Voice/data	• U. of New Hampshire-GSFC	9.6 kbps one channel	9.6 kbps	Transmission of experiment quick-look data from IPD to U. of New Hampshire
	• High altitude observatory (Boulder, CO)-GSFC	4.8 kbps	4.8 kbps	Transmission of experiment quick-look data from Experiment Operations Facility to Boulder, Colorado
Voice	Selected STDN stations-GSFC	3 kHz One Channel		
Voice	TDRSS station-GSFC	3 kHz		Operational coordination
*Voice/facsimile or wire photo	Worldwide solar forecasting network (primarily NOAA)	To be Determined	TBD	Transmission of ground-based solar pictures

*Project funded circuits

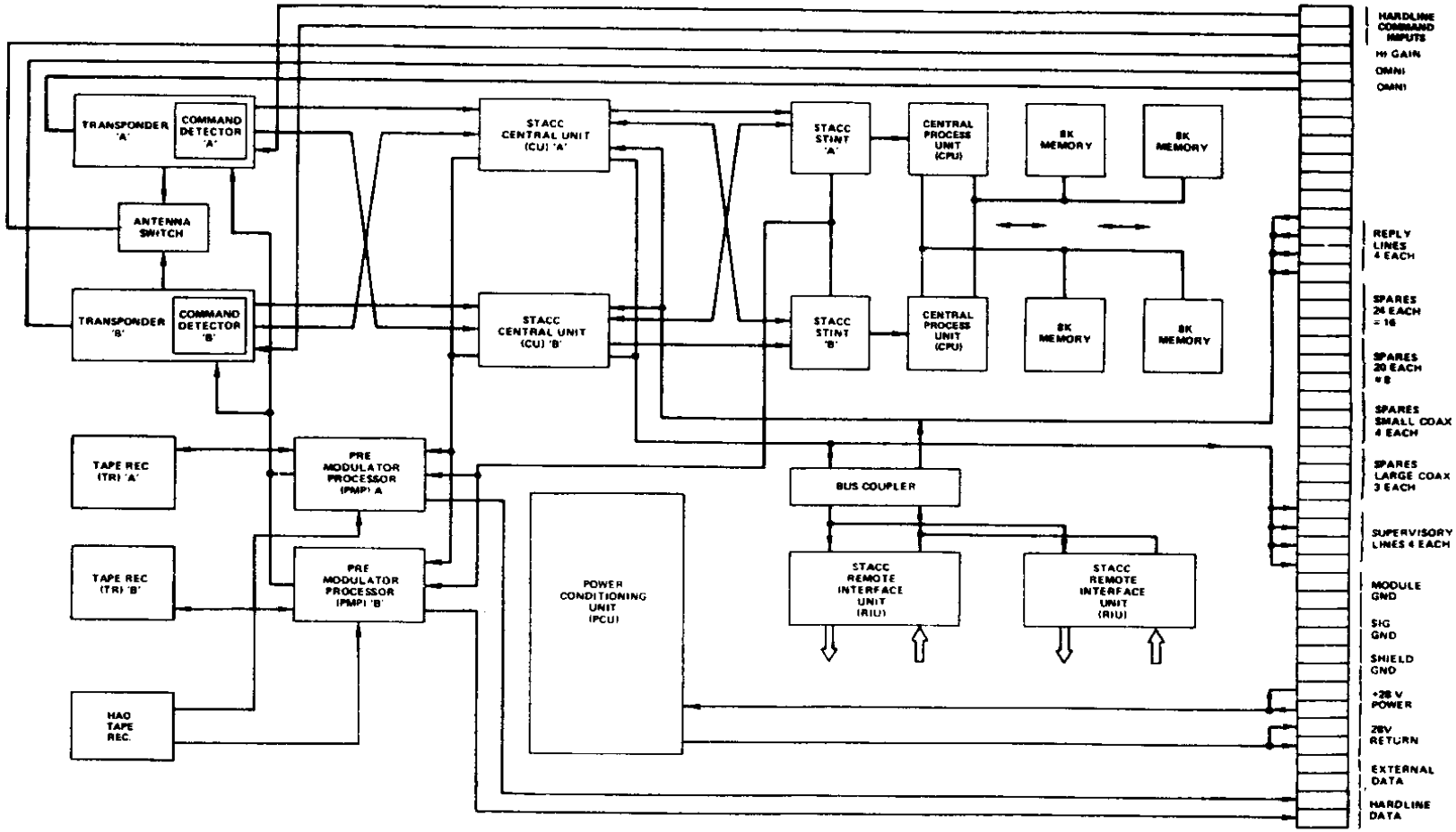

Figure 4-1. C&DH Subsystem Block Diagram Module Interface

Format of the data is identical to the spacecraft format only in word length, minor frame length, and minor-frame synchronization pattern. The format does not contain spacecraft "fixed" words; in particular, the format does not contain the spacecraft clock. The format contains an HAO-unique clock and additional unique housekeeping information.

- Normal-mode Format. The HAO instrument is allocated one minor frame word in the normal-mode format. Data will be output in the normal-mode format whenever the instrument is "ON" and not operating in the dwell.

- Real-time Format. The HAO tape recorder is bypassed, and image data are readout directly in real-time and in forward time sequence at 256 kbps. This is a backup mode only and will be the prime science gathering mode in the event of a failure of the HAO tape recorder.

SECTION 5

DATA PROCESSING

5.0 DATA PROCESSING

5.1 REQUIREMENTS

The Information Processing Division (IPD) at the Goddard Space Flight Center (GSFC) will be responsible for the data processing support to be provided by the Mission and Data Operations Directorate (M&DOD) for the SMM-A mission. Two types of processing, production and quick-look, will be conducted to provide both quick-look and final data to the SMM-A principal investigators and co-investigators.

- Production processing—complete and chronological processing of all acquired spacecraft tape recorder data. Final data tapes will be shipped to principal investigators and co-investigators.

- Quick-look processing—will provide for electronic data transmission to the University of New Hampshire, Durham, N.H. One scheduled playback orbit per day will be selected for quick-look transmission and will be transmitted within 24 hours of data acquisition at GSFC.

5.2 PRODUCTION PROCESSING

5.2.1 General

Production processing will consist of processing all playback data to produce a complete and chronological data base for the final scientific analysis. The playback data will be reversed and edited into major telemetry frames. Telemetry format changes will be detected and identified for later decommutation processing. Time annotation to an accuracy of ±10 milliseconds or better will be performed to correlate the data with the actual sample time. The data base will be decommutated to produce experimenter data tapes compatible with the computer facilities of the experimenters.

The experimenter data tapes will contain the following information:

- Experiment minor frame data
- Experiment subcommutator data
- Spacecraft minor frame data
- Spacecraft subcommutator data

- Flag fields indicating fill or noisy data
- GMT annotation of data to an accuracy of ±10 milliseconds or better

The production data tapes will be shipped to the experimenters within 30 days after the receipt of the data from the GSTDN or TDRSS stations.

5.2.2 Production Data Flow

Upon receipt of the SMM telemetry data, the GSTDN or TDRSS ground stations will digitize the data, format the data into NASCOM message blocks, and transmit the data to the IPD via NASCOM communication lines. The overall data flow for SMM-A production processing is shown in Figure 5-1.

The Telemetry On-line Processing System (TELOPS) will be used to process all SMM-A data. The TELOPS system provides an efficient, highly automated means of processing satellite telemetry data at GSFC. The data are received through an IBM 370 Input Processor System (IP) and stored in temporary hold files. A pre-edit program performs preliminary error detection and quality evaluation on all transmitted SMM-A station messages and reverses the playback data. The data are then stored in a large mass storage system (MSS). The functions of editing and time annotation, decommutation, and quick-look processing of the data will be performed by the UNIVAC 1108 Intermediate Processor System (IT). These functions will be performed for SMM by programs running as user programs under the UNIVAC 1108 EXEC-8 operating system and will be referred to as application programs (AP). The coordination of data for processing with an applications program, the scheduling of processing, the transfer of data from the MSS, and the disposition of the results will be directed by the UNIVAC 1108 TELOPS. The UNIVAC 1108 TELOPS is known as the Intermediate Processor Control System (ITCS) and runs under the general EXEC-8 System. A generalized data flow for the TELOPS environment is shown in Figure 5-2.

5.2.3 Input Processing and Transfer File Processing

The IPD TELOPS input processing system will accept the SMM-A data from the GSTDN stations and place the data into a raw-data file. Figure 5-3 shows the data flow for the input processing. A separation and merge program will collect the data for each project data format (PDF) and will check the data for correct transmission and also request retransmission of data blocks that were lost or were unacceptable. Ten PDF's will be processed by TELOPS for SMM-A: Spacecraft real-time data (PDF-A), spacecraft playback data (PDF's D, F, H, and J), HAO coronograph playback data (PDF's E, G, I, and K), and HAO coronograph real time data (PDF-C). Figures 5-4 and 5-5 illustrate the NASCOM block format of the real-time and the playback data.

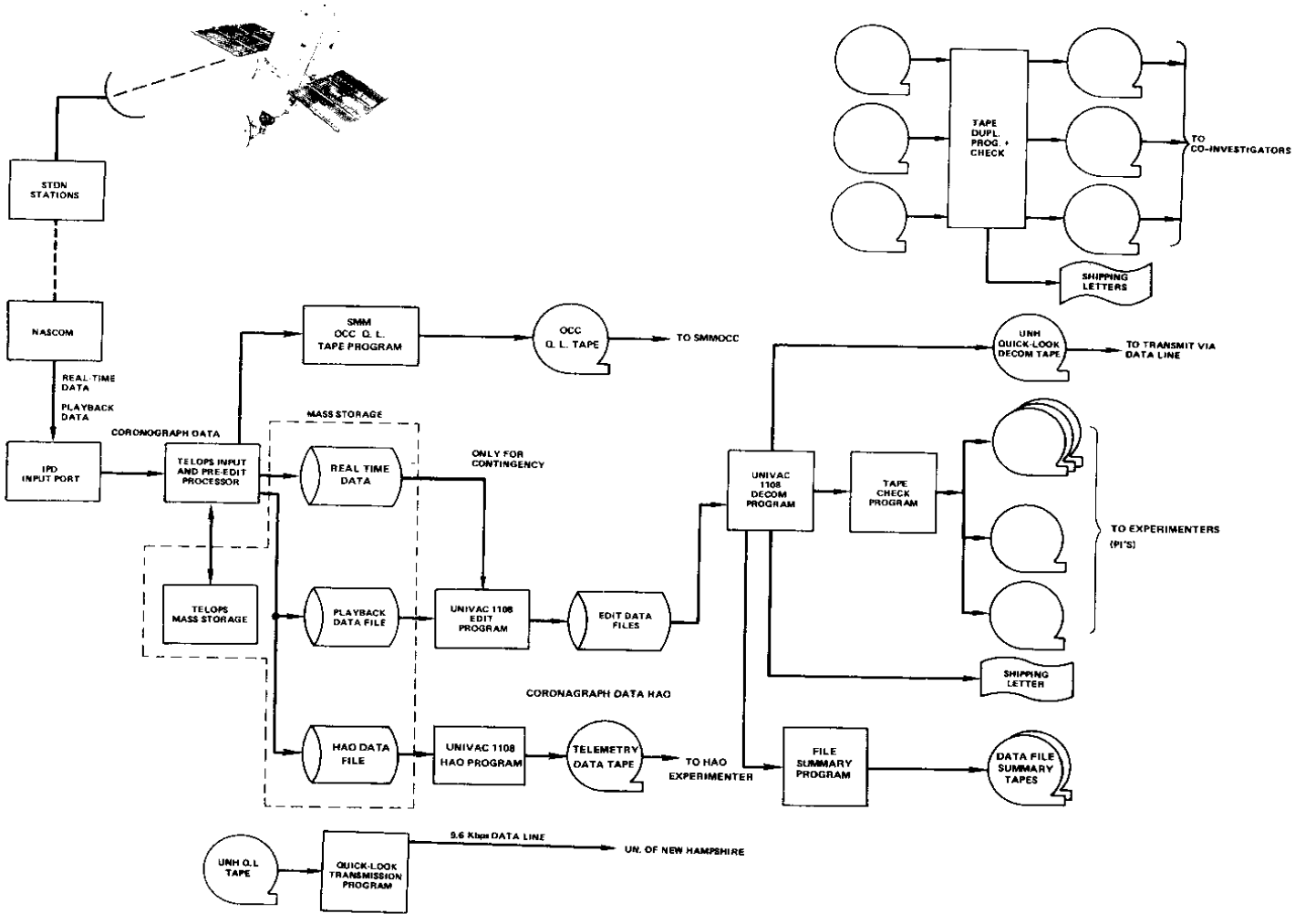

Figure 5-1. SMM-A Data Flow for Production and Quick-look Processing

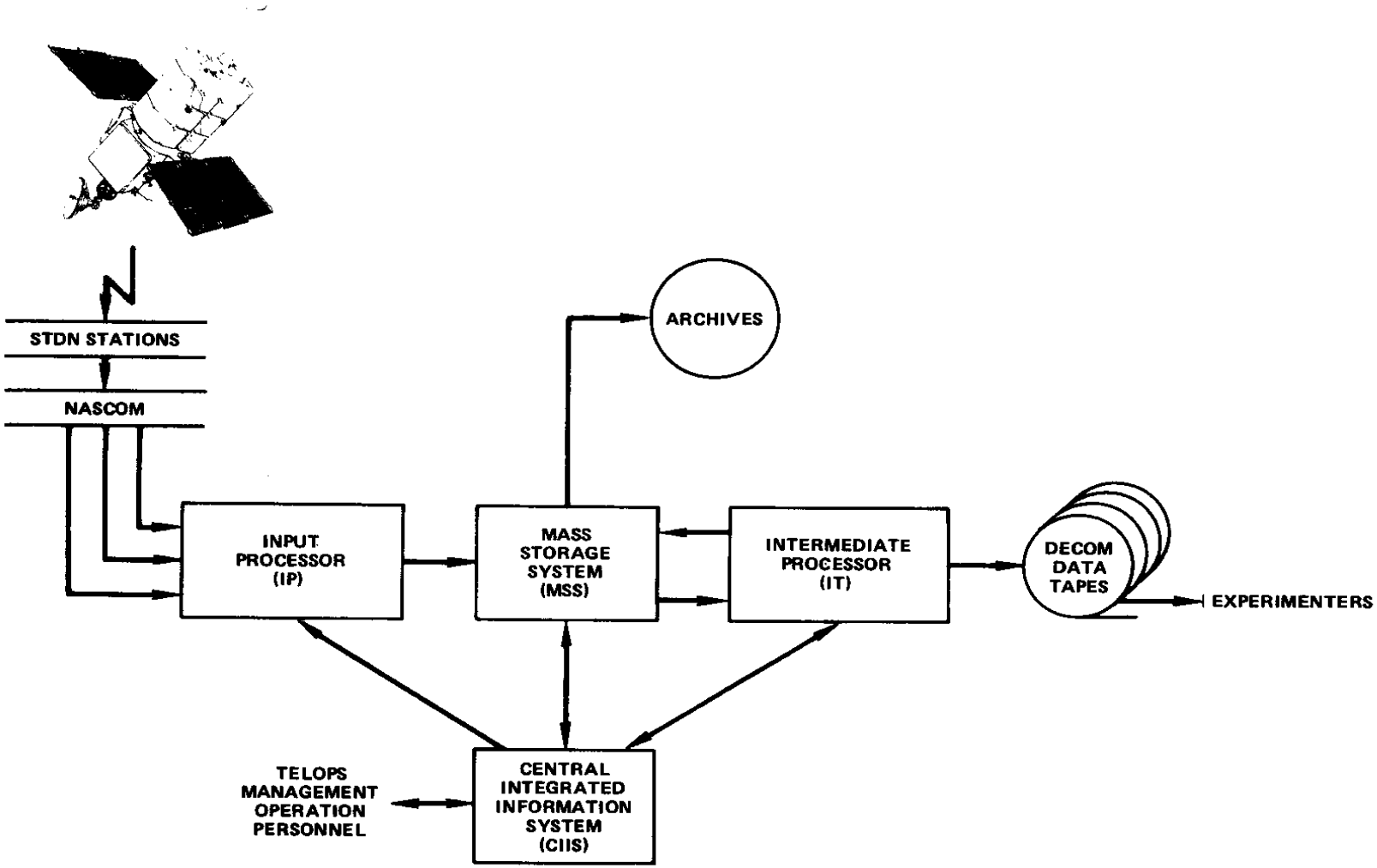

Figure 5-2. Data Flow under TELOPS Environment

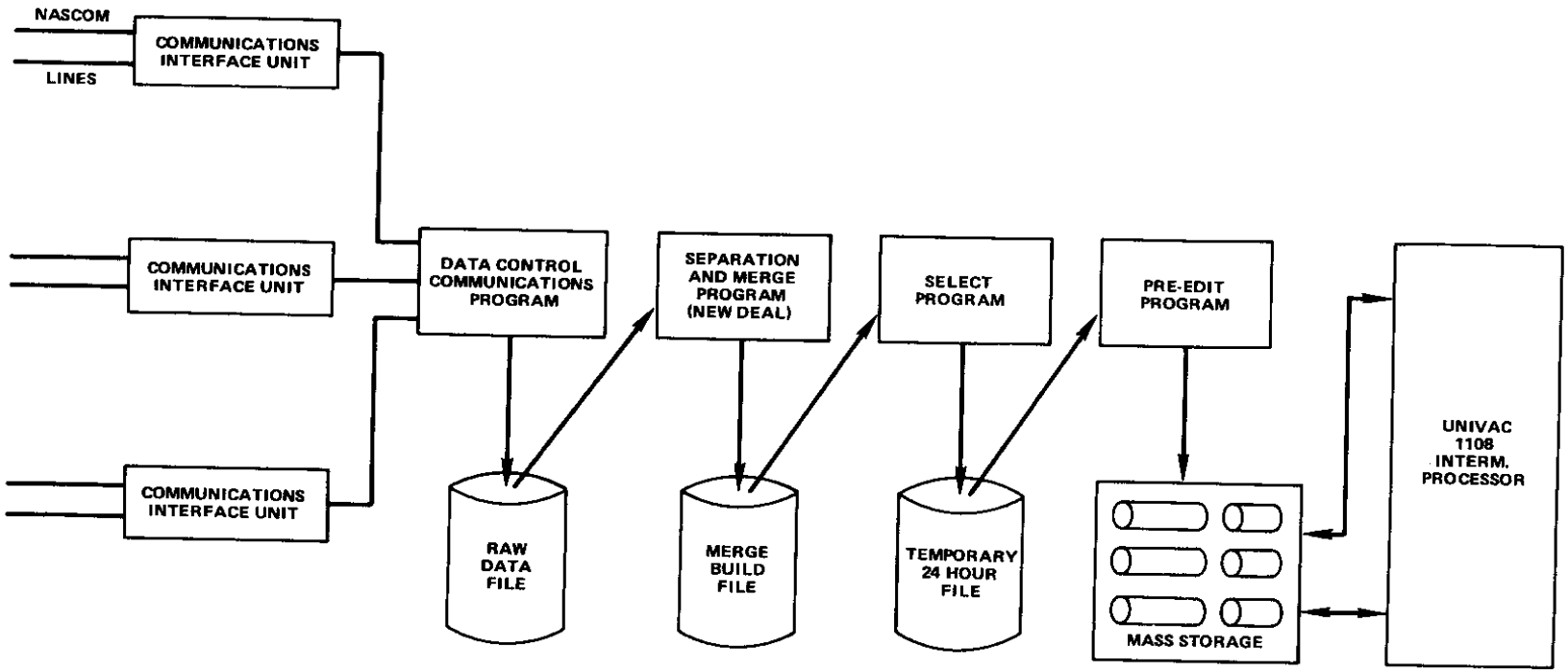

Figure 5-3. Data Flow for Input Processing

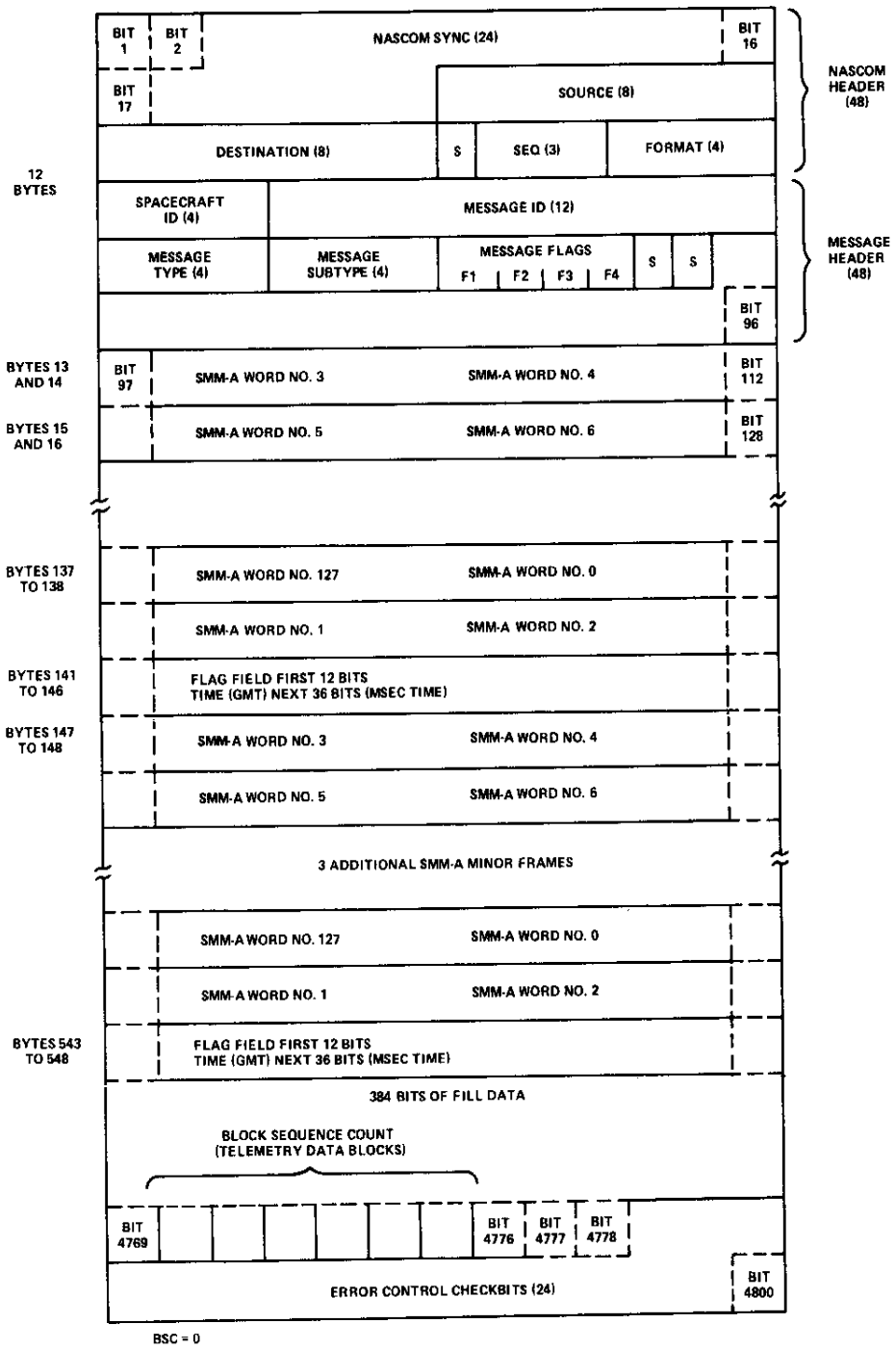

Figure 5-4. SMM-A Project Data Format A, Real-time Data 16 kbps from Observatory

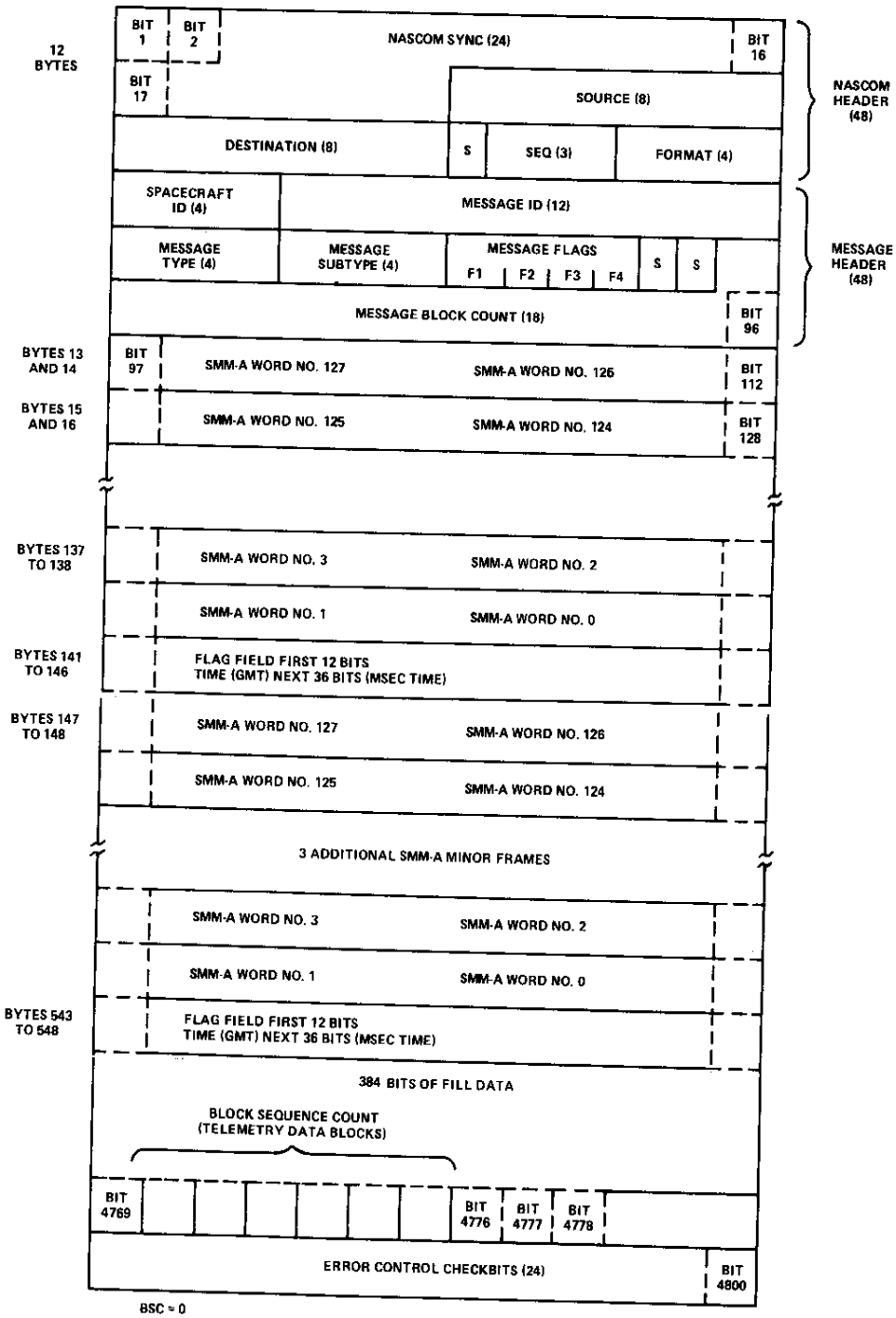

Figure 5-5. SMM-A Project Data Formats D, F, H and J. Playback Data 512 kbps from Observatory

After the data messages have been completely assembled, a pre-edit program performs error detection and quality evaluation of the telemetry messages. A telemetry message is typically a real-time pass or a spacecraft tape recorder dump taken at the station. The pre-edit program will accumulate quality-related statistics on a frame and message basis. For each telemetry message the pre-edit program builds a mass storage resident file of processed telemetry frames. The pre-edit program is started by the TELOPS scheduler specifying a 16-byte message key. A message parameter setup is initially performed using the spacecraft's PDF parameter record as shown in Table 5-1. After preliminary program setup of input and output locations, the pre-edit program reads the input blocks from the 24-hour hold file. It locates and deblocks the NASCOM input blocks, locates retransmitted blocks when a gap is found in the message block count (MBC), and merges them with the other input blocks. Each telemetry frame is extracted, and frame and data word reversal is performed for the playback data. The frame sync words of the SMM-A telemetry playback data are not reversed by the TELOPS pre-edit program. The frame sync word is checked and bit errors are counted for the frame sync word when disagreement with the nominal pattern is found. Also, data and time quality analyses are performed on the UTC ground time, spacecraft clock, and frame counter. The telemetry data format is identified, and the spacecraft tape recorder unit in operation is noted if it is playback data. A pre-edit flag field is prepared for each telemetry minor frame that contains flags about signal losses, time discontinuities, and related information. The format of the pre-edit flag field is shown in Table 5-2. The pre-edit file of the message is then built by placing each minor frame into a transfer file block. The format of the minor frame is shown in Figure 5-6. The time field of each minor frame contains the station time obtained at the end of the 24-bit frame sync pattern. The frame sync pattern at the end of the minor frame belongs actually to the next minor frame. Therefore, the time field indicates the time at the end of the minor frame plus 1.5 milliseconds (three sync words). The processed data are placed into a resident file in mass storage for access by the next processing step of editing and time annotating the SMM-A telemetry data.

Table 5-1
Spacecraft PDF Parameter Record

Description	Attributes			
	Real-Time		Playback	
PDF (SMM-A)	A	C	D, F, H, J	E, G, I, K
DATA TYPE	S/C Data	HAO Data	S/C Data	HAO Data
FORWARD/REVERSE	Forward	Forward	Reverse	Reverse
BIT/FRM W/FSW	1024	1024	1024	1024
FRAMES/SEQUENCE	128	N/A	128	N/A
FRM CNTR RANGE	0-127	None	0-127	None
BITS/FRM CNTR	7	None	7	None
OFFST BYTE+BIT	64+0	N/A	64+0	N/A
FRM CNTR INCRM	1	None	1	None
MODE BIT SIZE	2	2	2	
OFFST BYTE+BIT	3+3	3+3	3+3	3+3
BITS/FSW	24	24	24	24
OFFST BYTE+BIT	125	125	125	125
FSW PATT (HEX)	FAF320	FAF320	04CF5F	04CF5F
BITS/SC CLOCK	24	None	24	None
BITS/PIECE 1	8	None	8	None
BITS/PIECE 2	16	None	16	None
BITS/PIECE 3	N/A	N/A	N/A	N/A
FRM FREQ, PC 1			-2	-2
FRM FREQ, PC 2				
FRM FREQ, PC 3				
BYT OFFST, PC 1				
BYT OFFST, PC 2				
BYT OFFST, PC 3				
CLOCK INCREM	1	None	1	None
BITS/UTC	36	36	36	36
OFFST BYTE+BIT	129+4	129+4	129+4	129+4
UTC INCREM (MS)	64	4	2	2
UTC TOL (+/-MS)	3			
SCOM2 SYNC FRM	N/A	N/A	N/A	N/A
SCOM2 SYNC PAT	N/A	N/A	N/A	N/A
BITS/SC2 SYNC	N/A	N/A	N/A	N/A
OFFST/SC2 SYNC	N/A	N/A	N/A	N/A
BITS/SCOM 3 WRD	N/A	N/A	N/A	N/A
OFFST, SC3 WORD	N/A	N/A	N/A	N/A
ENCODING RATIO	No	No	No	No
BRC (4800 NIB)	4	4	4	4

Table 5-2
Pre-edit Flags

Bit		Contents
1	(MSB)	Decoding is suspect (not used for SMM)
2		Partial frame
3		Spare
4		Spare
5		Data gap
6		Frame counter error detected
7		Spare
8		Positive spacecraft clock error
9		Negative spacecraft clock error
10		Positive ground time error
11		Negative ground time error
12		Frame counter jump detected
13		Spare
14		Positive spacecraft clock jump
15		Negative spacecraft clock jump
16		Positive ground time jump
17		Negative ground time jump
18		Illegal ground time from station
19		Questionable data point
20		SUBCOM II error (not used for SMM)
21		SUBCOM III error (not used for SMM)
22		Verified mode change
23		Fraction start
24		Fraction end
25		Data point between fraction
26		Questionable spacecraft clock
27		Questionable ground time
28		Spare
29-32	(LSB)	Imperfect frame sync pattern (4-bit field)

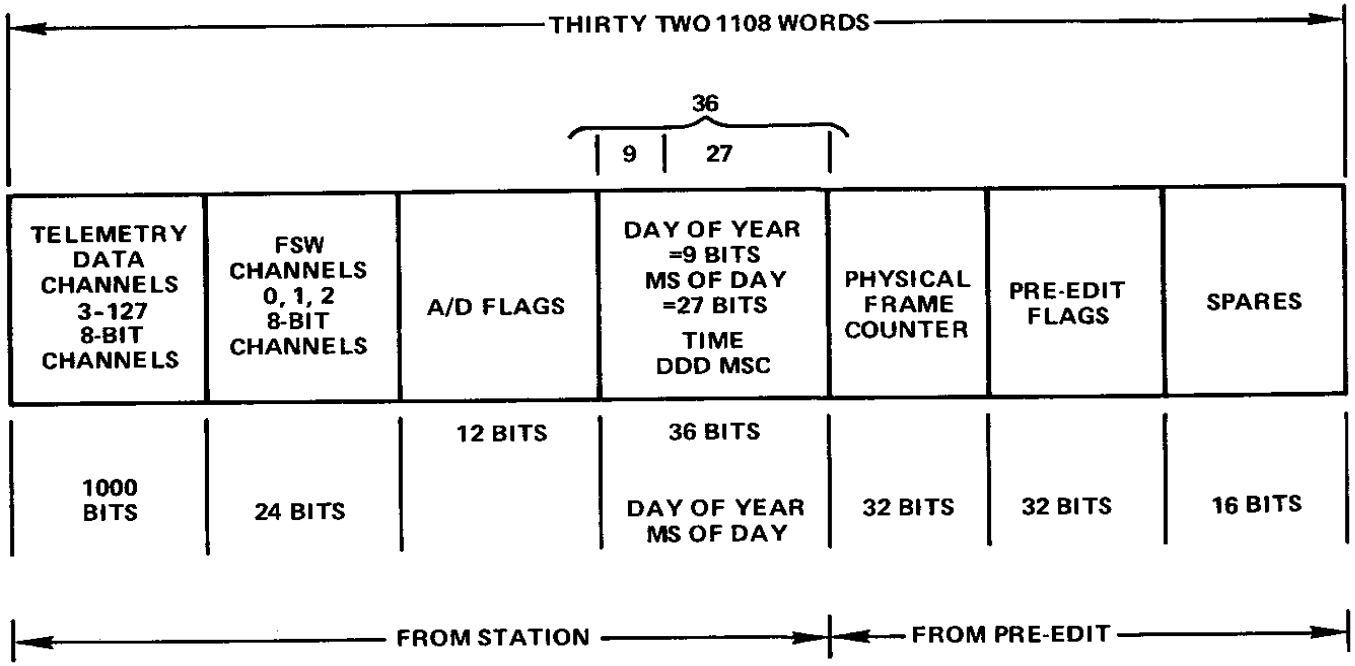

A/D FLAGS

F5	= BIT SLIPPAGE	SPARE	
F6	= DATA INPUT TERMINATION	SPARE	
F7	= FSW BIT ERRORS	SPARE	
F8	= FLYWHEELING	SPARE	
F9	= AOS	P_{27}	= ODD PARITY BIT FOR MS OF DAY
F10	= LOS	P_{36}	= ODD PARITY BIT FOR MS OF DAY AND DAY OF YEAR

Figure 5-6. Minor-frame Format

5.2.4 Telemetry Data Editing

The telemetry data will be edited by an edit program on the UNIVAC 1108 computer. The program will edit playback data (and on request, real-time data) from the TELOPS transfer subfiles according to a matrix of telemetry major and minor frames. The edit program will provide fill data in areas where signal losses have occurred, and it will correlate and annotate the data with GMT.

The time correlation will be performed by using the spacecraft clock and the frame counter, to provide the time of actual data sampling. The program will also compute several processing flags required in later processing steps. The data will be written into edit subfiles that will be used as input to the subsequent data processing step. Data quality information and accounting information will be produced for intermediate data analysis and as a basis for releasing the data to the next processing step.

5.2.4.1 Edit Program Input Data. The input data for the edit program will be staged from the TELOPS mass storage by the UNIVAC 1108 ITCS program via a data channel that connects the IBM 370/145 with the UNIVAC 1108. A query request file containing the file keys of the desired data initiates the data transfer to a 1108 disk file, where the input data are then accessed by the 1108 edit program.

The data can be staged to the UNIVAC 1108 by means of a transfer tape as a backup support. The transfer tape is read into the disk data file by the ITCS program. The data on the disk will appear in the normal format as described below. The transfer tape will be a 9-track tape with a packing density of 6250 bpi. Figure 5-7 shows the detailed format of the transfer tape, and Figure 5-8 shows the 9-byte header format.

ITCS will stage the scheduled pre-edit data to the UNIVAC 1108 disk for access by the SMM-A UNIVAC 1108 edit program. The requested input data will be available in subfiles as shown in Figure 5-9. A specified ITCS call from the edit program will fetch the header information. The pre-edit key identifying the subfile is given in 16 EBCDIC characters as follows:

Byte		
3	'P'	For pre-edit
4-5	NN	Spacecraft ID (TELOPS assigned ID; ID = 13 for SMM-A)
6-14	YYDDDHHMM	AOS from message summary
15-17	NNN	Sequence number
18	N	Version number

A different specified ITCS call from the edit program will fetch the telemetry frames from the subfile for subsequent editing into major frames.

5.2.4.2 Edit Program Output Data. The Edit Program will produce formatted edit data and will write this information to an edit data file. Figure 5-10 shows the edit data file format, Table 5-3 shows the format of the edit label record, Table 5-4 shows the major-frame header, and Figure 5-11 shows the edit minor-frame format.

Data are typically edited for one complete data day, and a built-in data merge program will chronologically arrange all data for one edit run. Redundant data are removed during the data merging. The telemetry spacecraft format ID is examined during the merge process, and the data are separated into data files according to the telemetry format ID (refer to Table 5-5 for definition of format ID). The last major frame in a data file and the first major frame in the following data file will be redundant major frames and the minor-frame pointer points to the minor frame where the format change occurred, i.e., where the new telemetry format started.

The data are written into one or more edit output files and a summary of all edit files and their data quality is printed for later quality control (see Figure 5-12). Accounting information is also prepared for each data file for later access by the TELOPS Central Integrated Information System. Header information according to TELOPS specifications is produced for each edit file (refer to Table 5-6). The completed edit files are then destaged as subfiles by TELOPS for insertion into the TELOPS mass storage. The next processing step will fetch the data from the mass storage for the final processing step of decommutation.

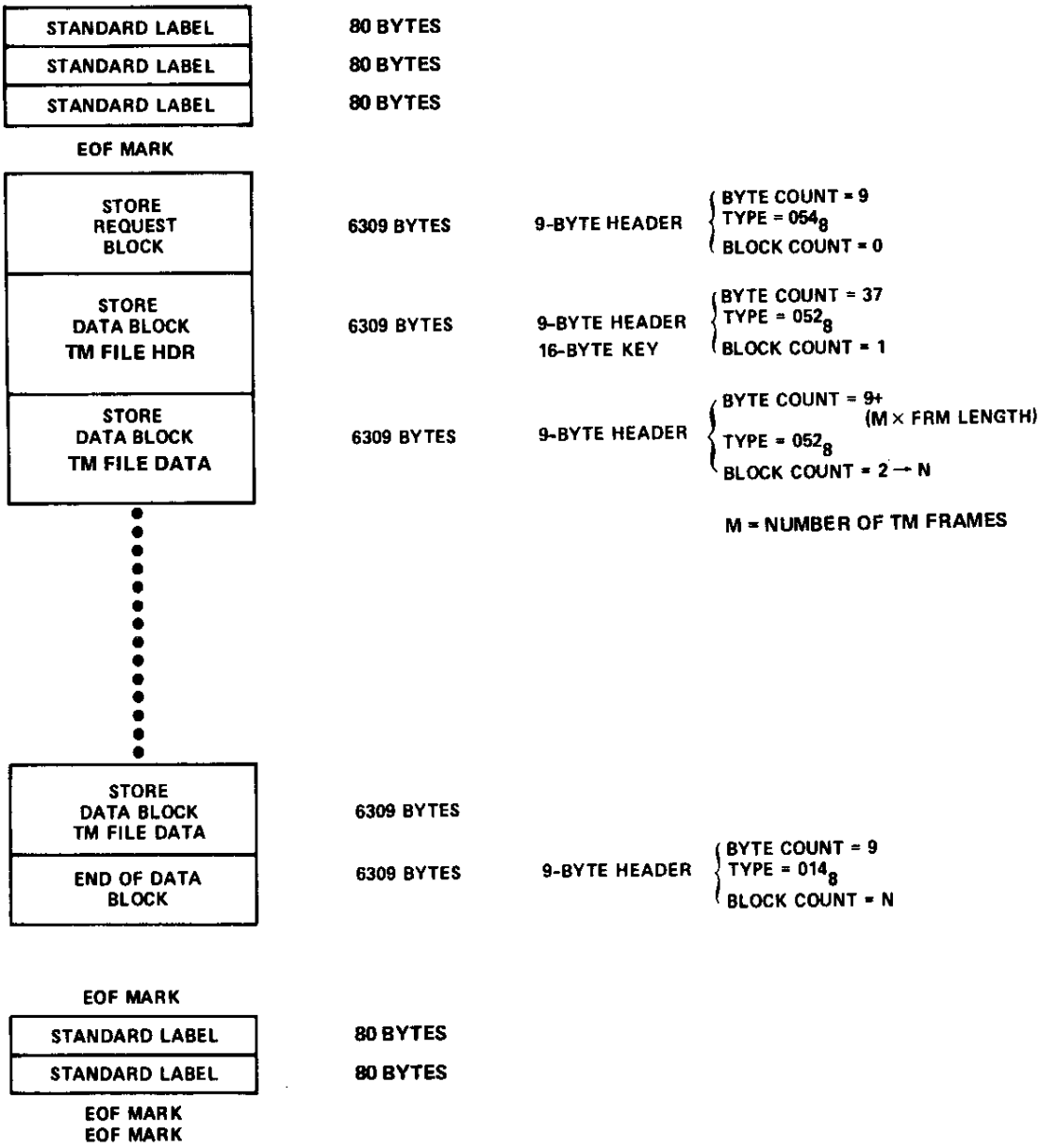

Figure 5-7. Pre-edit Transfer Tape Format

01	2 BYTES BYTE COUNT	16	SOURCE 17	BLOCK TYPE 18 1 BYTE	24	25	NOT USED 1 BYTE	32
33	CONSECUTIVE BLOCK COUNT 2 BYTES	48	49	NOT USED 1 BYTE	56	57	NOT USED 1 BYTE	64
65	FLAGS - 1 BYTE	72						

BYTE COUNT	BYTE COUNT OF ACTUAL DATA IN 6309-BYTE RECORD (INCLUDES 9-BYTE HEADER)
SOURCE	0 = IBM 370 1 = UNIVAC 1108
BLOCK TYPE	0101100 = STORE REQUEST BLOCK 0101010 = STORE DATA 0001100 = END OF DATA
CONSECUTIVE BLOCK COUNT	0 = STORE REQUEST BLOCK 1 = STORE DATA TM FILE HDR 2-N = STORE DATA TM FILE DATA N = END OF DATA (SAME AS PRECEDING STORE DATA BLOCK)
FLAGS	BIT 65 = 1 IF MORE DATA TO FOLLOW = 0 IF END OF DATA

Figure 5-8. Nine-byte Header Format

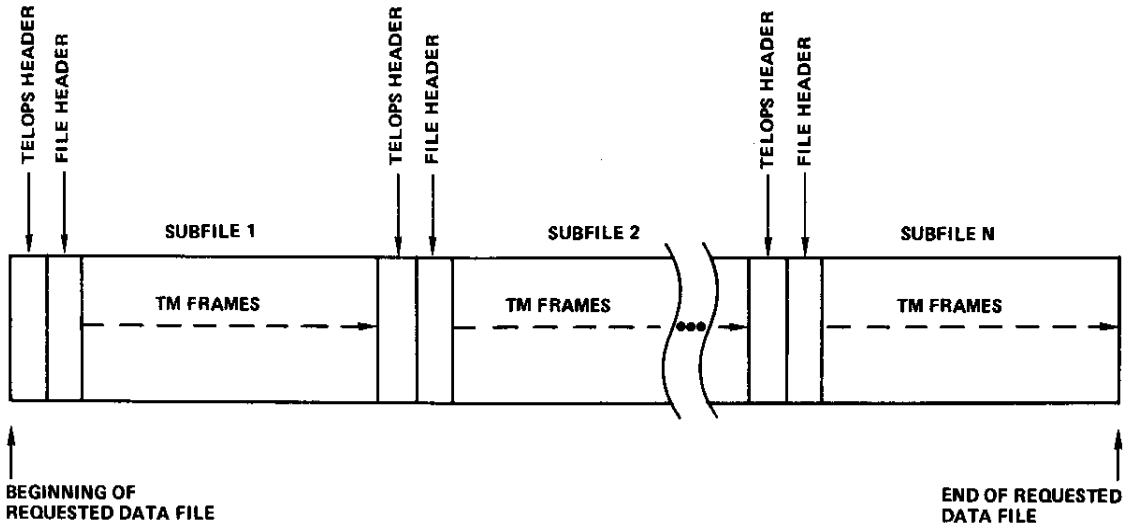

Figure 5-9. Example of ITCS Input File

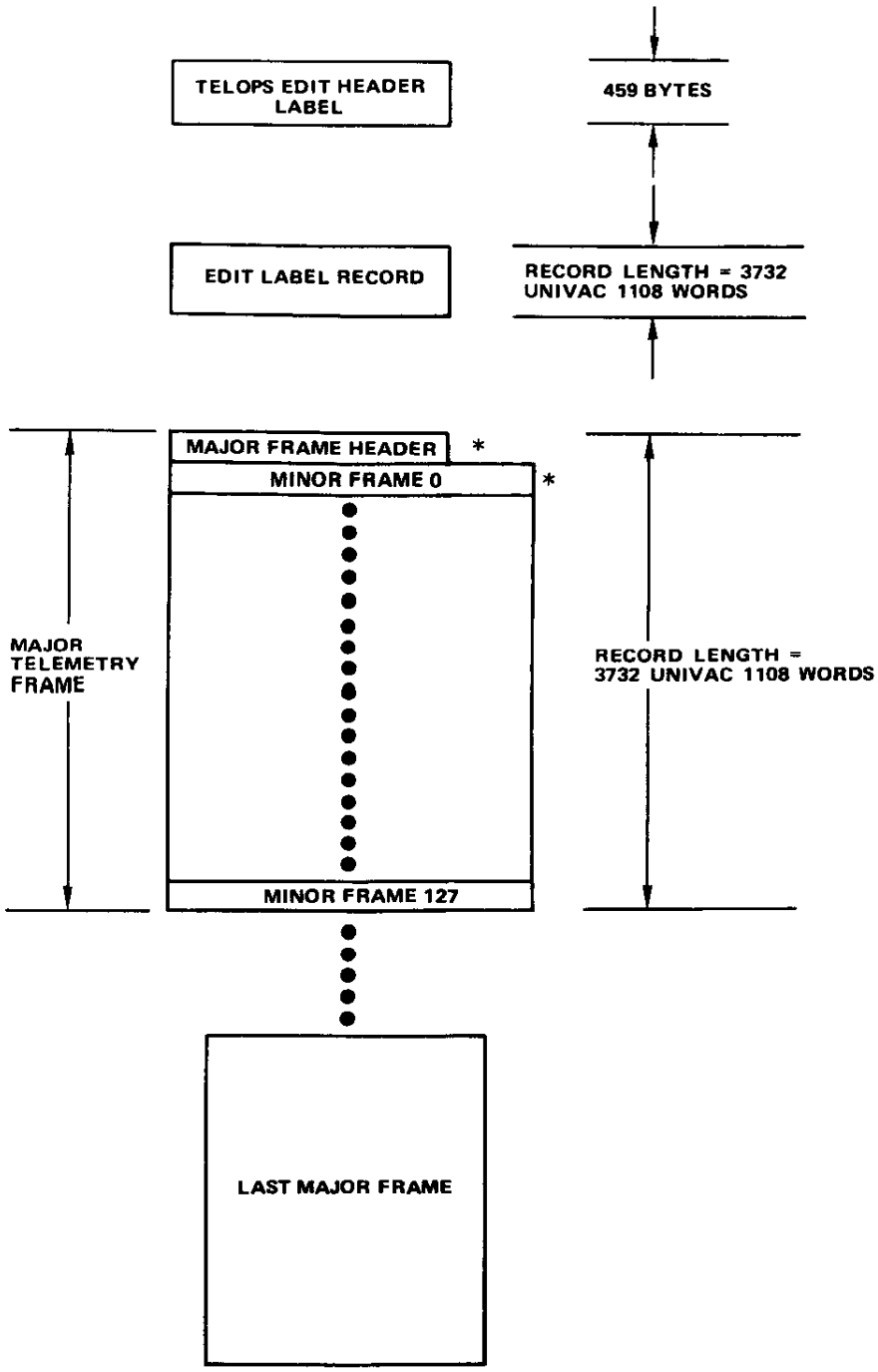

*NOTE: THE MAJOR FRAME HEADER IS 20 WORDS LONG, A MINOR FRAME IS 29 WORDS LONG

Figure 5-10. Edit Data File Format

Table 5-3
Edit Label Record Description

Word	Type	Contents
1	Integer (I)	=1
2	I	Year of data
3	I	Start day count of data (1-366)
4	I	Start time of data (milliseconds of day)
5	I	Stop day count of data (1-366)
6	I	Stop time of data (milliseconds of day)
7	I	Format ID
		0 = Science Format
		1 = Engineering Format
		2 = OBC Flexible Format
		3 = Dwell Mode/Science Format
		4 = Dwell Mode/Engineering Format
		5 = Dwell Mode/OBC Flexible Format
8	I	Data file break condition
		0= Inclusive file
		1 = Introductory file
		2 = Intermediate file
		3 = Final file
9	I	S/C clock at file start time
10	I	S/C clock at file end time
11-13	FD	TELOPS N-Key
14-16	FD	TELOPS P-Key
17	I	Number of major frames in file
18	I	Number of minor frames with bit errors in frame sync word
19	I	Number of minor frames with fill data
20	FD	Satellite ID = 'SMM1'
21	FD	Source Station Code (three char)
22	FD	PDF (one char)
23	I	Dwell mode word
24	I	Bit Rate
		0 = 1 kbps
		1 = 2 kbps
		2 = 4 kbps
		3 = 8 kbps
		4 = 16 kbps
		5 = 32 kbps
		6 = 64 kbps
25	I	HAO ID Info.
26-28		Spare
29	I	Start time milliseconds of year (biased)
30	I	Stop time milliseconds of year (biased)
31-246	EBCDIC	Pre-edit IIS Header
247-3732		Spares

Table 5-4
Major-frame Header

36-bit Word	Form	Contents
1	Integer (I)	Type of data = 3 for telemetry data
2	I	Block count (1-N)
3	I	Spacecraft clock + 4 bits (LSB); Resolution is 64 msec for LSB
4	I	Day of year
5	I	Milliseconds of day
6	I	Milliseconds of year
7	I	Number of fill frames
8	I	Number of frames with synch errors
9	I	Number of frames with station A/D flag
10	I	Intermediate edit file number
11	I	Ground GMT in milliseconds of year
12	I	Minor frame pointer to mode transition
13-19		Spares
20	I	Checksum of data words 21-3732

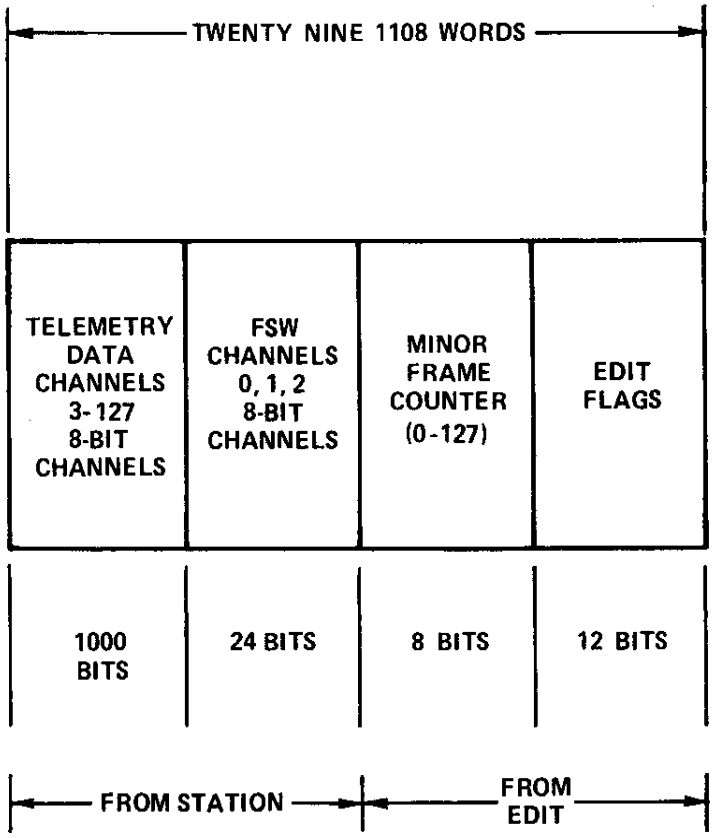

EDIT FLAGS

BIT (BIT 1 = MSB)

1 SPARE
2 SPARE
3 SPARE
4 SPARE
5 SPARE
6 SPARE
7 SPARE
8 INVALID MSEC OF DAY IN GROUND TIME
9 INVALID DAY OF YEAR IN GROUND TIME
10 INVALID FRAME TIME INCREMENT
11 0 = GOOD FRAME SYNCH; 1 = DEFECTIVE FRAME SYNCH
12 0 = DATA; 1 = FILL (ZERO FILL IN ENTIRE FRAME)

Figure 5-11. Minor-frame Format of Edit File

Table 5-5
Format ID Definition

Set Format ID to this number	Word 3 Bits 4-5	Word 67 Bit 1
0 = Science Format	10	0
1 = Engineering Format	01	0
2 = OBC Flexible Format	11	0
3 = Dwell Mode, in Science Format	10	1
4 = Dwell Mode in Engineering Format	01	1
5 = Dwell Mode in OBC Flexible Format	11	1

Notes:

1. Word 3 and word 67 are fixed minor frame words in the SMM telemetry format.

2. Bit 1 is the most significant bit in the telemetry word.

HA02 EDT 9016

QUALITY LISTING FOR EACH PRE-EDIT INPUT FILE

PRE-EDIT KEY AOS TIME PJDYYDDDHHMMSEQV	RAW TIME (SEC.OF DAY) # OF START	STOP	TOTAL FULL MIN.FR	PCT. FULL MIN. FR.REC.	PCT. ERROR	NO. OF FRAMES	NO. OF ENG. MJ FR.	FULL PERFECT	BAD TIMES	% GOOD MAJOR FRAMES
P0779018C460J010	2974	2793	11310	9999	9996	0	84	U	0	96.55
P0779018C227J010	9148	8844	18964	9990	9998	0	139	U	0	94.56
P0779018C453J010	18031	17593	27392	9998	9998	0	210	U	0	98.59
P0779018C632J010	23859	23560	18716	10000	9998	0	145	U	0	100.00
P0779018C719J010	26520	26379	8812	9997	9996	0	66	U	0	97.06
P0779018C900J010	32705	32403	18892	9996	9997	0	146	U	0	100.00
P0779018144500010	53642	53142	31252	9999	9999	0	242	U	0	99.59
P0779018162600010	59749	59212	33518	9983	9997	1	253	U	0	96.93
P0779018180600020	65660	65207	28308	9988	9997	0	217	U	0	98.64
P0779018201C0010	73141	72626	32159	9978	9997	1	247	U	0	98.41
P0779018210900010	76345	76168	11108	9997	9997	0	83	U	0	96.51
P0779018215300010	78926	78794	8250	10000	9996	0	63	U	0	98.44
P0779018224000020	81768	81201	8926	2517	9431	496	64	U	1	96.57
P0779019C032J010	2263	1927	20982	9994	9998	0	156	U	0	96.30

Figure 5-12. Edit File Summary (Part 1 of 2)

EDT FILE SUMMARY

START TIME DAY	HH	MM	SS	STOP TIME HH	MM	SS	PRE-EDIT KEY PIDYYDDDHHMMSEQV	STA	F	EDIT KEY FIDYYDDDHHMMSEQV	XFRD	INT	TP	FL	#FRMS	FL	FR.ER.	ENG.FR	T	F	%RECOV.	%GOOD FR.
18	1	45	43	1	12	20	P0779018022700 10	HAW	G	E0779018000 10012	aaaaaa			1	40	2	47	0	003	100.000	99.082
18	1	12	20	1	17	7	P0779018022700 10	HAW	G	E0779018000 10022	aaaaaa			2	7	3	0	0	007	100.000	100.000
18	1	17	7	2	26	4	P0779018022700 10	HAW	G	E0779018000 10032	aaaaaa			3	101	4	12	0	003	100.000	99.907
18	2	26	4	3	32	17	P0779018045300 10	ACN	G	E0779018000 10042	aaaaaa			4	97	5	10	0	003	100.000	99.919
18	3	32	17	3	37	4	P0779018045300 10	ACN	G	E0779018000 10052	aaaaaa			5	7	6	0	0	007	100.000	100.000
18	3	37	4	4	52	10	P0779018045300 10	ACN	G	E0779018000 10062	aaaaaa			6	110	7	2	0	003	100.000	99.986
18	4	52	10	5	57	42	P0779018063200 10	ACN	G	E0779018000 10072	aaaaaa			7	97	-8	69	0	003	101.042	99.283
18	5	57	42	6	2	28	P0779018063200 10	ACN	G	E0779018000 10082	aaaaaa			8	7	9	0	0	007	100.000	100.000
18	6	2	28	6	31	9	P0779018063200 10	ACN	G	E0779018000 10092	aaaaaa			9	42	10	0	0	003	100.000	100.000
18	6	31	9	7	18	15	P0779018071900 10	GWM	G	E0779018000 10102	aaaaaa			10	69	11	94	0	003	100.000	98.936
18	7	18	15	7	42	50	P0779018090000 10	GWM	G	E0779018000 10112	aaaaaa			11	36	12	7	0	003	100.000	99.848
18	7	42	50	7	53	4	P0779018090000 10	GWM	G	E0779018000 10122	aaaaaa			12	15	13	0	0	007	100.000	100.000
18	7	53	4	8	58	36	P0779018090000 10	GWM	G	E0779018000 10132	aaaaaa			13	96	14	0	0	003	100.000	100.000
18	8	58	36	9	46	23	P0779018201000 10	ACN	G	E0779018000 10142	aaaaaa			14	70	15	43	0	003	100.000	99.520
18	9	47	45	10	28	43	P0779018162600 10	MIL	G	E0779018000 10152	aaaaaa			15	61	16	65	1	003	100.000	99.168
18	10	28	43	10	33	30	P0779018162600 10	MIL	G	E0779018000 10162	aaaaaa			16	7	17	4	1	007	100.000	99.554
18	10	33	30	11	19	14	P0779018162600 10	MIL	G	E0779018000 10172	aaaaaa			17	67	18	5	1	003	100.000	99.942
18	11	21	17	11	56	47	P0779018180600 20	MIL	G	E0779018000 10182	aaaaaa			18	53	19	16	0	003	100.000	99.764
18	11	58	50	13	7	6	P0779018144500 10	MIL	G	E0779018000 10192	aaaaaa			19	101	20	4	0	003	100.000	99.969
18	13	7	6	13	18	42	P0779018144500 10	MIL	G	E0779018000 10202	aaaaaa			20	17	21	0	0	007	100.000	100.000
18	13	18	42	14	44	43	P0779018144500 10	MIL	G	E0779018000 10212	aaaaaa			21	126	22	0	0	003	100.000	100.000
18	14	44	43	15	43	25	P0779018162600 10	MIL	G	E0779018000 10222	aaaaaa			22	86	23	3	0	003	100.000	99.973
18	15	43	25	15	46	12	P0779018162600 10	MIL	G	E0779018000 10232	aaaaaa			23	7	24	0	0	007	100.000	100.000
18	15	48	12	16	11	25	P0779018162600 10	MIL	G	E0779018000 10242	aaaaaa			24	34	25	0	0	003	100.000	100.000
18	16	11	25	17	19	0	P0779018180600 20	MIL	G	E0779018000 10252	aaaaaa			25	99	26	36	0	003	100.000	99.716
18	17	19	0	17	31	58	P0779018180600 20	MIL	G	E0779018000 10262	aaaaaa			26	19	27	0	0	007	100.000	100.000
18	17	31	58	18	5	25	P0779018180600 20	MIL	G	E0779018000 10272	aaaaaa			27	49	28	0	0	003	100.000	100.000
18	18	5	25	19	25	58	P0779018201000 10	ACN	G	E0779018000 10282	aaaaaa			28	118	29	65	1	003	100.000	99.437
18	19	25	56	19	38	16	P0779018201000 10	ACN	G	E0779018000 10292	aaaaaa			29	18	30	0	1	007	100.000	100.000
18	19	38	16	20	8	59	P0779018201000 10	ACN	G	E0779018000 10302	aaaaaa			30	45	31	0	1	003	100.000	100.000
18	20	8	59	21	8	22	P0779018210900 10	HAW	G	E0779018000 10312	aaaaaa			31	87	32	41	0	003	100.000	99.632
18	21	8	22	21	52	4	P0779018215300 10	ACN	G	E0779018000 10322	aaaaaa			32	65	-33	104	0	003	101.563	98.750
18	21	52	4	22	39	10	P0779018224000 20	GWM	G	E0779018000 10332	aaaaaa			33	67	-34	222	496	003	97.101	97.411
18	22	41	13	22	45	19	P0779019003200 10	HAW	G	E0779018000 10342	aaaaaa			34	7	36	2	0	007	100.000	99.777
18	22	45	19	23	49	29	P0779019003200 10	HAW	G	E0779018000 10352	aaaaaa			35	94	37	12	0	003	100.000	99.900
18	23	49	29	23	53	35	P0779019003200 10	HAW	G	E0779018000 10362	aaaaaa			36	6	38	0	0	007	100.000	100.000
18	23	53	35	23	58	21	P0779019003200 10	HAW	G	E0779018000 10372	aaaaaa			37	7	39	0	0	003	100.000	100.000
18	23	58	21	0	30	27	P0779019003200 10	HAW	G	E0779018000 10382	aaaaaa			38	47	40	2	0	001	100.000	99.967

Figure 5-12 (continued). Edit File Summary (Quality Listing for Each Pre-edit Input)

Table 5-6
Edit Header Label for IIS

Item	Field Name	Length	Displacement	Type	Description	Source	Notes for SMM-A
1	ENIPS	XL002	0	-	Used by NIPS	NIP ---	
2	EKEY	CL016		A	Record key	ITP ---	
2A	ETYP	CL001	2	A	File type	ITP ---	'E'
2B	ESAT	CL002	3	A	Satellite ID	ITP ---	=13 for SMM-A
2C	EUTC	CL009	5	A	Corrected event time	ITP ---	YYDDDHHMM
2D	ESEQ	CL003	14	A	Sequence number	ITP ---	Edit subfile No.
2E	EVER	CL001	17	A	Version number	ITP ---	Version: 0 → 9, A → Z
3	ESEG	XL001	18	N	Segment	ITP ---	= 0
4	ENIPS2	XL005	19	-		NIP ---	
5	EVSZ	XL004	24	-		NIP ---	
6	EUSER	OF (zero)		-		--- ---	
7	EDAY	XL004	28	N	Day number (RECDIO use)	--- REC	
8	ETOD	XL004	32	N	Time of day (RECDIO use)	--- REC	
9	EFILSZ	XL004	36	N	Edit file size in bytes	ITP ---	No. of bytes incl. IIS header
10	ENUMFRM	XL004	40	N	Num frames edit file	ITP ---	No. of major frames in file
11	EIDBPTR	XL004	44	N	IDB PTR for P/E	--- REC	
12	EIDBNUM	XL004	48	N	Num of P/E IDBS	ITP ---	=1
13	EDIDBPT	XL004	52	N	IDB PTR for decom	--- REC	
14	EDIDBNM	XL004	56	N	Num decom IDBS	--- REC	
15	EAUXNAM	CL022	60	A	Aux file name	ITP ---	Pre-edit key and station and PDF
16	EEDTRUN	CL009	82	A	ITP run date	ITP ---	bbbMMDDYY
17	EITPRUN	CL008	91	A	ITP run num	ITP ---	bbbbYDDD
18	ERUNTYP	CL004	99	A	ITP run type	ITP ---	PROD or QLbb
19	EGORBIT	CL012	103	A	Group/orbit num	--- OFU	Quality indicator
20	EQCODE	CL003	115	A	Quality	ITP ---	Expt. format ID
21	EFILBGN	CL014	118	A	Edit file start time	ITP ---	YYDDD:HH:MM:SS
22	EFILSTP	CL014	132	A	Edit file stop time	ITP ---	YYDDD:HH:MM:SS
23	EFILSPN	CL012	146	A	Time span	ITP ---	N/A
24	ECORFIL	CL080	158	A	5 corr files	--- OFU	
25	ESPARE1	CL007	236	A		--- ---	
26	EEDTAPE	CL016	245	A	Edit tap	ITP ---	N/A
27	EMSEDIT	CL016	261	A	Master edit	ITP ---	N/A
28	EMSTIME	CL016	277	A	Time history	ITP ---	N/A
29	EMSDATA	CL016	293	A	Master data	ITP ---	N/A
30	EPRENUM	CL002	309	A	Num preedits	ITP ---	b1
31	EPNUSED	CL002	311	A	Num PE used	ITP ---	b1
32	EREDID	CL001	313	A	Edit was redone	--- OFU	
33	EMSGID	CL016	314	A	Key on current file	ITP ---	N/A
34	EORBKEY	CL016	330	A	Orbit file key	--- OFU	
35	EORBFIL	CL008	346	A	ITP ORB file ID	ITP ---	N/A
36	EEDECOM	CL009	354	A	Decom processed time	IP ---	
37	ESATID	CL004	363	A	Sat ID	ITP ---	'SMM1'
38	EARRIVE	CL009	367	A	Time of arrival at MSF	IP ---	
39	EMSFVOL	CL006	376	A	MSG vol ID	IP ---	
40	EARCHIV	CL004	382	A	Archive Locn	--- OFU	
41	EINTAPE	CL007	386	A	Input edit tape ID	IP ---	
42	EXFVOL	CL007	393	A	Edit transfer tape	MOV ---	
43	EBUVOL	CL007	400	A	Edit backup volume	MOV ---	
44	EARVOL	CL007	407	A	Edit archive volume	MOV ---	
45	EMSGID	CL016	414	A	Message ID	ITP ---	N-Key of TELOPS
46	EPEID	CL016	430	A	Preedit ID	ITP ---	Pre-edit key
47	EPEQUAN	CL007	446	A	No. of frames used in edit	ITP ---	
48	ESCREC	CL001	453	A	S/C record	ITP ---	N/A
49	EDELCOD	CL002	454	A	Delete code	ITP ---	N/A
50	ESTATN	CL003	456	A	Station	ITP ---	AAA

Note: Length of edit header label = 459 bytes

5.2.5 Experimenter Data Tapes

The experimenter data tapes will be prepared by the UNIVAC 1108 decommutation program. The edit data files will be used as input to the decommutation program. The following paragraphs describe the file of data that is produced on the decom tapes.

The input edit file is comprised of contiguous major frames beginning at the major-frame boundary preceding a TM format transition and continuing to the major-frame boundary immediately after the following TM format transition. (A TM format transition is defined as a change in telemetry format, or a spacecraft recorder dump boundary.) The input edit file is decommutated to produce data files for the SMM experimenters according to specified formats.

Each SMM-A experimenter data tape will contain as many complete groups of data files as can be accommodated on a single data tape formatted as shown in Figure 5-13.

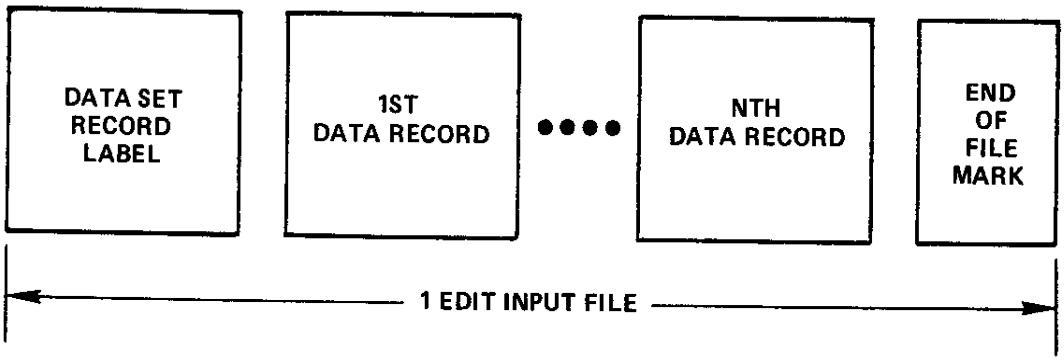

Figure 5-13. Format of SMM-A Experimenter Data Tape

Each file of data is started with the data set label record (see Table 5-7) and is followed by data records containing the decommutated data. Within each file the data from consecutive major frames are presented in consecutive groups of records. The number of records required for a single major frame depends upon each experimenter's data format and the type of data. The data type is specified within each record.

Several data fields are unique in the experimenter data records. The time field contains day count from 1979.0 epoch and milliseconds of day. The data flag field "F-map" contains the number of bit errors in the minor-frame sync word

Table 5-7
Data Set Label Record Description

Byte	Description
1	File number
2	Data type (0 = Label)
3-4	Record No. in file (0 = label record)
5-8	Year of data (year - 1900)
9-12	Start day count of data (1-366)
13-16	Start time of data (milliseconds of day)
17-20	Stop day count of data (1-366)
21-24	Stop time of data (milliseconds of day)
25-28	STDN station
29-44	Station message ID (TELOPS Pre-Edit key)
45-60	Master file name (TELOPS edit key)
61-62	Decom No.
63-64	Decom reel No.
65-68	No. of major frames in file
69-72	No. of minor frames with bit errors in frame sync word
73-76	No. of minor frames with fill data
77-78	Format ID 0 = science format 1 - engineering format 2 = OBC flexible format 3 = full dwell mode format (i.e., all minor frame words are in the following file)
79-80	Number of dwell word if in dwell mode
81-84	Start clock for file
85-88	Stop clock for file
89-90	Bit rate 0 = 1Kbps 1 = 2Kbps 2 = 4Kbps 3 = 8Kbps 4 = 16Kbps 5 = 32Kbps 6 = 64Kbps

Table 5-7 (continued)

Byte	Description
91	File's position within the tape 0 = inclusive file 1 = introductory file 2 = intermediate file 3 = final file 4 = continued file on this tape (First portion of this file is on another tape. For HAO video data tapes only)
92	HAO data type, record format identifier for this file 1 = type 1 2 = type 2 3 = type 3 4 = type 4 5 = type 5 6 = type 6 7 = type 7 8 = type 8
93-98	Decom run date
99-101	Spares
For Decom Internal Use Only	
102	X-1A-W reel # (0 = not done) X-1B reel #
103	X-1C-W reel # X-2-W reel #
104	X-3-W reel # X-4A-W reel #
105	X-4B-W reel # X-4C-W reel #
106	X-4D-W reel # X-5A-W reel #
107	X-5B-W reel # X-5C-W reel #
108	X-6-W reel # X-7-W reel #

the fill data flag. The term "F-map" is defined as a 4-bit integer that gives a data quality assessment for each minor frame where:

1111 = all data for minor frame are fill data

•
• = numbers between indicate number of sync errors
•

0000 = all data for minor frame are good data

The data flag field "M-flag" contains flag information about each entire major frame. The term "M-flag" is defined for a major frame as follows:

00000000 = some fill data in major frame

00001111 = no fill data, but some sync errors

11111111 = no fill data, no sync errors

The minor-frame pointer field contains the minor-frame number (0-127) where the TM format transition occurred. This field is valid only for the first and last major frame in a file. A special case of occurrence is a complete last major frame where the mode transition occurred in minor-frame 0 of the next major frame. This case is identified by the insertion of 0 into the minor-frame pointer field.

The experimenter data tapes will be typically produced by a decom run for one complete data day. Each reel of tape mailed to the experimenter is externally labeled with the following information: spacecraft name (SMM-1), experimenter number, decommutation run number, and experimenter's tape-sequence number in the decom run. The computer operator is instructed by the decom program to attach the external tape label (see Figure 5-14) to the data tape assigned to the experimenter.

The decom program produces shipping letter listings for use by Quality Control before the data tapes are shipped to the experimenter. The label record contents for each file are listed, as well as accounting information. (Refer to Table 5-8 for the TELOPS decom IIS header.) The listings are used by Quality Control to ensure that decommutated files are chronologically ordered.

After the data tapes have been quality checked by the tape check program (see Figure 5-15 for sample output), the data tapes are released by Quality Control for shipment to each experimenter. The shipping letter (see Figure 5-16) accompanies each shipment of decommutated tapes to the experimenter and identifies

NASA-GSFC CODE 565

SATELLITE SMM-1 EXPERIMENTER 2

RUN NO. 8123 TAPE NO. 1 NO. FILES

DENSITY 800 556 OPERATOR DATE

REMARKS PRODUCTION

540-73 (3/68)

a. Experimenter No. 2 Data Tape Label

NASA-GSFC CODE 565

SATELLITE SMM-1 EXPERIMENTER 7

RUN NO. 8123 TAPE NO. 1 NO. FILES

DENSITY 800 556 OPERATOR DATE

REMARKS PRODUCTION

540-73 (3/68)

b. Experimenter No. 7 Data Tape Label

Figure 5-14. Sample External Labels

Table 5-8
TELOPS Decom IIS Header

Item	Field Name	Length	Displacement	Type	Description	Source	Notes for SMM-A
1	DNIPS	XL002		-	Used by NIPS	NIP ---	
2	DKEY	CL016		A	Record key	ITP ---	
						--- ---	
2A	DTYP	CL001	2	A	File type	ITP ---	'D'
2B	DSAT	CL002	3	A	Satellite ID	ITP ---	= 13 for SMM-A
2C	DUTC	CL009	5	A	Corrected event time	ITP ---	Same as edit key YYDDDHHMM
2D	DSEQ	CL003	14	A	Sequence number	ITP ---	Edit subfile no.
2E	DVER	CL001	17	A	Version number	ITP ---	Ø to 9, A to Z
3	DSEG	XL001	18	N	Segment ID	ITP ---	= 0
4	DNIPS2	XL005	19	-		NIP ---	
5	DVSZ	XL004	24	-		NIP ---	
6	DUSER	OF (zero)	-			--- ---	
7	DDAY	XL004	28	N	Day number (RECDIO use)	--- REC	
8	DTOD	XL004	32	N	Time of day (RECDIO use)	--- REC	
9	DEIDBPT	XL004	36	N	IDB PTR to edit	--- REC	
10	DEIDBNM	XL004	40	N	Num edit IDBS	ITP ---	Always 1
11	DXIDBPT	XL004	44	N	IDB PTR to experimenters	--- REC	
12	DXIDBNM	XL004	48	N	Num experimenter IDBS	ITP ---	No. of experimenter and format combinations on output
13	DAUXNAM	CL022	52	A	Aux file name	ITP ---	Same as aux. file name in edit file
14	DDECRUN	CL009	74	A	Decom run date	ITP ---	bbbMMDDYY
15	DITPRUN	CL008	83	A	ITP run number	ITP ---	bbbbYDDD
16	DRUNTYP	CL004	91	A	ITP run type	ITP ---	'PROD'
17	DSHGRUP	CL016	95	A	Ship group	ITP ---	N/A
18	DFILBGN	CL014	111	A	Decom file start	ITP ---	YYDDD:HH:MM:SS
19	DFILSTP	CL014	125	A	Decom file stop	ITP ---	YYDDD:HH:MM:SS
20	DRELDTE	CL009	139	A	Release date	--- OFU	
21	DSATID	CL004	148	A	Sat. ID	ITP ---	'SMM1'
22	DVALI	CL009	152	A	Data validation date	--- OFU	
23	DORBIT	CL006	161	A	Related orbit num	--- OFU	N/A
24	DORBFIL	CL016	167	A	Orb file key	--- OFU	N/A
25	DFILCRE	CL009	183	A	IP receipt time	IP ---	
26	DSPARE1	CL006	192	A		--- ---	
						--- ---	
27	DXPID	CL004	198	A	Experimenter ID	ITP ---	X-1 through X-7
28	DXTPINV	CL007	202	A	Tape inventory No.	--- OFU	
29	DXTPDCM	CL007	209	A	Decom tape ID	ITP ---	YDDDTN (Where N = reel no.)
30	DXFILID	CL002	216	A	File ID	ITP ---	File no.
31	DXSHPDT	CL005	218	A	Ship date	--- OFU	
32	DXACKDT	CL005	223	A	Ack date	--- OFU	
33	DXRETDT	CL005	228	A	Ret date	--- OFU	
34	DXEXPST	CL003	233	A	Exp status	--- OFU	
35	DXSPARE	CL007	236	A	Format I/D	ITP ---	'bbbFbbb' Where F = format No. 0 through 5
						--- ---	
36	DEDTKEY	CL016	198 + 45 J	A	Edit key	ITP ---	
37	DESPARE	CL002	214 + 45 J	A	Spare	--- ---	

Notes: J = DXIDBNM (Item 12)

Items 27 to 35 are repeated J times resulting in a decom IIS header length of 261, 306, ..., up to 846 bytes depending on the value of DXIBNM.

HA01 DEC 73 36

DATE 123177 PAGE 13

HEAD-A EXPERIMENTER NO. 1 TAPE CHECK

FILE NO.	YEAR	START TIME DDD:HH:MM:SS	STOP TIME DDD:HH:MM:SS	NO. REC	ORB REC	TLM REC	STA ID	REEL NO.	REEL FILE	BAD TIME	BAD CLK	NO. GAPS	FILL FRAMES	SEQ ERROR	READ ERRS
1	1977	336:02:00:01	336:02:49:51	225	2	222	ACN	1	1	0	2	1	22	22	0
2	1977	336:02:50:32	336:04:29:31	443	4	438	ACN	1	2	0	1	1	97	96	0
3	1977	336:04:31:34	336:06:53:33	634	6	627	GWM	1	3	0	5	3	67	69	0
4	1977	336:06:54:14	336:09:11:27	612	5	606	QUI	2	1	0	1	1	66	65	0
5	1977	336:09:12:49	336:10:40:53	395	4	390	QUI	2	2	0	2	1	15	14	0
6	1977	336:10:41:34	336:10:51:07	47	1	45	QUI	2	3	0	0	0	29	28	0
7	1977	336:10:51:48	336:12:35:34	464	4	459	BDA	2	4	0	3	2	127	125	0
8	1977	336:12:37:37	336:13:09:42	147	2	144	HAW	2	5	0	1	1	1	1	0
9	1977	336:13:10:23	336:13:59:32	222	2	219	ACN	3	1	0	0	0	0	0	0
10	1977	336:14:00:13	336:16:22:13	634	6	627	ACN	4	1	0	0	0	0	0	0
11	1977	336:16:23:35	336:18:48:59	646	6	639	HAW	4	2	1	4	3	79	77	0
12	1977	336:18:50:21	336:21:06:53	609	5	603	ACN	5	1	0	6	3	185	191	0
13	1977	336:21:07:34	336:22:05:36	262	3	258	HAW	5	2	0	1	1	105	104	0
14	1977	336:22:06:17	336:23:44:35	440	4	435	HAW	5	3	0	0	0	0	0	0
15	1977	336:23:45:16	337:01:59:45	597	5	591	ACN	6	1	0	4	3	140	139	0

*** END OF TAPE CHECK ***

@FREE A1A-W

@XQT TC2/HEAO

Figure 5-15. Tape Check Program Sample Output

	STA	PE FILE # YYDDDHHMM	P D F	EDIT YDDDTF	DAY	START HH MM	STOP HH MM	EXP A-1 T	EXP A-1 F	EXP A-2A T	EXP A-2A F	EXP A-2B T	EXP A-2B F	EXP A-2C T	EXP A-2C F	EXP A-3 T	EXP A-3 F	EXP A-4 T	EXP A-4 F	EXP DCM T	EXP DCM F
1	ACN	781551032	D	81551B	155	02:[illegible]	02:43	1	1	1	1	1	1	1	1	1	1	1	1		
2	QUI	781550341	D	81551C	155	02:44	03:08	1	2	1	2	1	2	1	2	1	2	1	2		
3	QUI	781550341	D	81551D	155	03:31	03:40	1	3	1	3	1	3	1	3	1	3	1	3		
4	HAW	781551129	D	81551E	155	03:43	03:46	1	4	1	4	1	4	1	4	1	4	1	4		
5	QUI	781550516	D	81551F	155	03:54	05:16	1	5	1	5	1	5	1	5	1	5	1	5		
6	ACN	781551032	D	81551G	155	05:17	07:09	1	6	1	6	1	6	1	6	1	6	1	6		
7	HAW	781550952	D	81551H	155	07:39	08:18	1	7	1	7	1	7	1	7	1	7	1	7		
8	HAW	781551129	D	81551I	155	08:19	11:16	2	1	1	8	1	8	1	8	1	8	1	8		
9	ACN	781551211	D	81551J	155	11:17	12:10	2	2	1	9	1	9	1	9	1	9	1	9		
10	ACN	781551351	D	81552A	155	12:11	13:50	2	3	1	10	1	10	1	10	1	10	1	10		
11	HAW	781551446	D	81552B	155	13:51	13:59	2	4	1	11	1	11	1	11	1	11	1	11		
12	HAW	781551446	D	81552C	155	14:00	14:48	3	1	2	1	2	1	2	1	2	1	2	1		
13	HAW	781551625	D	81552D	155	14:50	16:26	3	2	2	2	2	2	2	2	2	2	2	2		
14	HAW	781551807	D	81552E	155	16:28	18:04	3	3	2	3	2	3	2	3	2	3	2	3		
15	GWM	781551930	D	81552F	155	18:05	19:31	3	4	2	4	2	4	2	4	2	4	2	4		
16	ACN	781552026	D	81552G	155	19:32	20:25	4	1	2	5	2	5	2	5	2	5	2	5		
17	GWM	781552109	D	81552H	155	20:25	21:08	4	2	2	6	2	6	2	6	2	6	2	6		
18	GWM	781552248	D	81552I	155	21:10	22:47	4	3	2	7	2	7	2	7	2	7	2	7		
19	HAW	781561216	D	81553A	155	22:48	23:28	4	4	2	8	2	8	2	8	2	8	2	8		
20	QUI	781560107	D	81553B	155	23:41	01:07	4	5	2	9	2	9	2	9	2	9	2	9		
21	QUI	781560245	D	81553C	156	01:08	01:59	4	6	2	10	2	10	2	10	2	10	2	10		

TOTAL NUMBER OF FILES -- 21

A-1 J.JOHNSON/NRL A-3 SCHWARZ/SAO A-4 HOFFMAN/MIT
A-2A ROTHSCHILD/GSFC A-2B GARMIRE/CIT A-2C BOWYER/UCB

THIS COPY IS TO BE RETAINED FOR YOUR INFORMATION.

PLEASE SIGN AND RETURN THE ATTACHED RECEIPT FORM TO --

DIGITAL DATA ACCOUNTING OFFICE
DIGITAL DATA CONTROLLER
NASA GODDARD SPACE FLIGHT CENTER , CODE 564
GREENBELT , MARYLAND 20771

Figure 5-16. Sample Shipping Letter

the data files, the start and stop times of the data files on each tape, and the edit data files associated with each file of decommutated data. An enclosed tape receipt card must be signed by the experimenter and returned to the GSFC IPD. The shipment and distribution of tapes are discussed in paragraph 5.2.14.

The SMM experimenters will periodically receive a Data File Summary Tape which contains (chronologically) all data set labels from the beginning of the data year. Each file on the tape will contain all data set labels for a single data day. The number of files on the summary tape will thus increase throughout the processing year. This information will be used by experimenter to catalog the data sets, and it will facilitate the subsequent manipulation of the data. The first record of each tape file contains a short summary about the data set labels to follow. Figure 5-17 gives the format of the data file summary tape.

RECORD 1		
16-BIT WORD	BYTE	DESCRIPTION
1	MSB	FILE NO. OF THIS FILE
2	LSB	DATA TYPE = 20, VOL. LABEL RECORD NO. OF THIS RECORD
3-4		YEAR OF TAPE VOLUME
5-6		START DAY COUNT OF TAPE VOLUME (1-366)
7-8		START TIME OF TAPE VOLUME (MILLISECONDS OF DAY)
9-10		STOP DAY COUNT OF TAPE VOLUME
11-12		STOP TIME OF TAPE VOLUME (MILLISECONDS OF DAY)
13-14		NO. OF DATA SETS ON EXPERIMENTER TAPE VOLUME
15-16		DECOM NO.
17-54		SPARES

RECORD 2
DATA SET LABEL (REFER TO TABLE 5-7) OF FIRST DATA SET ON THE EXPERIMENTER TAPE

RECORD 3
DATA SET LABEL OF SECOND DATA SET ON THE EXPERIMENTER TAPE

•
•
•
•

RECORD N
DATA SET LABEL OF LAST DATA SET ON THE EXPERIMENTER TAPE

NEXT FILES ARE FORMATTED AS ABOVE

DOUBLE EOF MARK

Figure 5-17. Format of Data File Summary Tape

5.2.6 Data Tape Format for HXIS Experiment

The format of the HXIS experimenter data tape is shown in Figure 5-18 and Table 5-9. The data tape will contain as many files as can be packed on one 9-track production data tape written with a density of 1600 bpi. Copies of the HXIS production tape, with a tape density of 800 bpi, will be made available to the co-investigator at the University of Birmingham.

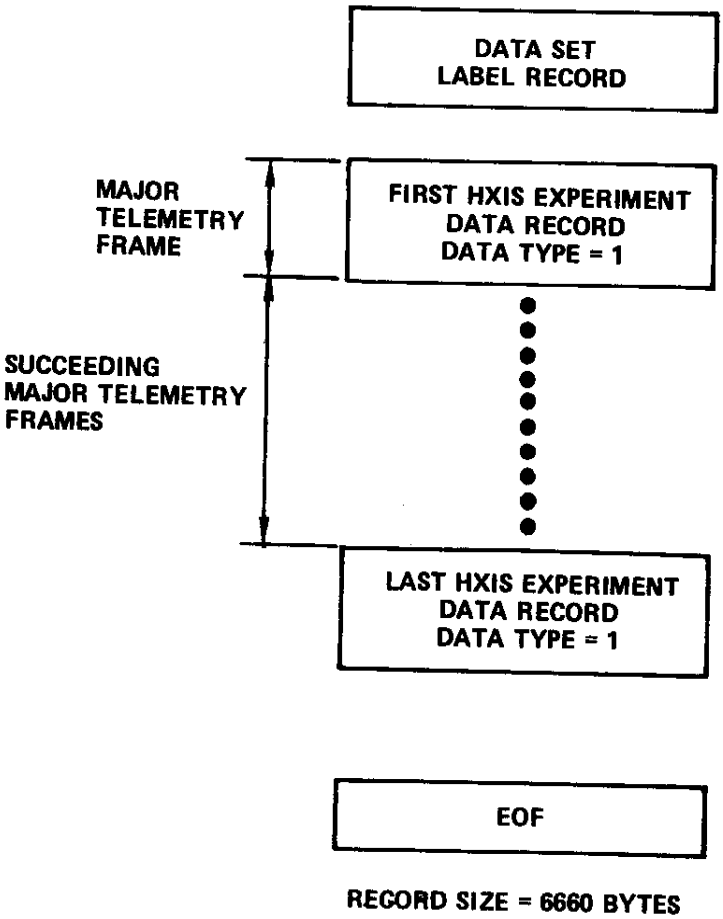

Figure 5-18. Decommutation Format for HXIS Data File

Table 5-9
SMM Data Tape Format for Hard X-ray Imaging Spectrometer

Byte	Description
1	File No. of this file
2	Data Type = 1 HXIS Data Record
3-4	Sequential record number in data file
5-6	Day-count from epoch 1979.0 (Day count 1 starts at 00:00:00 1/1/79)
7-12	Milliseconds of day, U.T., at minor frame 0
13	Spare
14-16	Spacecraft clock at minor frame 0
17	Minor frame pointer to format change
18	M-Flag
19-82	F-Map
83	D(32,0) Flare Alert (MSB)
84	D(33,0) Flare Alert (LSB)
85	D(32,32) Flare Alert (MSB)
86	D(33,32) Flare Alert (LSB)
87	D(32,64) Flare Alert (MSB)
88	D(33,64) Flare Alert (LSB)
89	D(32,96) Flare Alert (MSB)
90	D(33,96) Flare Alert (LSB)
91	D(32,5) Status Micropro. 1
92	D(32,6) Status Micropro. 2
93	D(32,10) ANE Status 1
94	D(32,26) ANE Status 3
95	D(32,42) ANE Status 2
96	D(32,58) ANE Status 3
97	D(32,74) ANE Status 1
98	D(32,90) ANE Status 3
99	D(32,106) ANE Status 2
100	D(32,122) ANE Status 3
101	D(32,22) ANE Temp.
102	D(32,54) Detector Temp.
103	D(32,86) 1st Temp.
104	D(32,118) Collimator 1 Temp.
105	D(32,30) Collimator 2 Temp.
106	D(32,62) Pwr. Supply 1 Temp.
107	D(32,94) Pwr. Supply 2 Temp.
108	D(32,126) DHE Temp.
109	D(32,14) + 10 V Monitor Pwr. Supply 1
110	D(32,46) + 24 V Monitor Pwr. Supply 1
111	D(32,78) + 5 V Monitor Pwr. Supply 1
112	D(32,110) - 7 V Monitor Pwr. Supply 1
113	D(32,18) + 10 V Monitor Pwr. Supply 2
114	D(32,50) + 24 V Monitor Pwr. Supply 2
115	D(32,82) + 5 V Monitor Pwr. Supply 2
116	D(32,114) - 7 V Monitor Pwr. Supply 2
117	D(32,37) Photodiode 1
118	D(32,38) Photodiode 2
119	D(32,69) HV Monitor 1
120	D(32,70) HV Monitor 2
121	D(32,101) Pressure Monitor 1
122	D(32,102) Pressure Monitor 2

Table 5-9 (continued)

Byte	Description
123 + 40N	D(4, J)
124 + 40N	D(5, J)
125 + 40N	D(14, J)
126 + 40N	D(15, J)
127 + 40N	D(20, J)
128 + 40N	D(21, J)
129 + 40N	D(24, J)
130 + 40N	D(25, J)
131 + 40N	D(36, J)
132 + 40N	D(37, J)
133 + 40N	D(40, J)
134 + 40N	D(41, J)
135 + 40N	D(46, J)
136 + 40N	D(47, J)
137 + 40N	D(52, J)
138 + 40N	D(53, J)
139 + 40N	D(56, J)
140 + 40N	D(57, J)
141 + 40N	D(68, J)
142 + 40N	D(69, J)
143 + 40N	D(72, J)
144 + 40N	D(73, J)
145 + 40N	D(79, J)
146 + 40N	D(84, J)
147 + 40N	D(85, J)
148 + 40N	D(88, J)
149 + 40N	D(89, J)
150 + 40N	D(90, J)
151 + 40N	D(91, J)
152 + 40N	D(92, J)
153 + 40N	D(100, J)
154 + 40N	D(101, J)
155 + 40N	D(104, J)
156 + 40N	D(105, J)
157 + 40N	D(110, J)
158 + 40N	D(111, J)
159 + 40N	D(116, J)
160 + 40N	D(117, J)
161 + 40N	D(120, J)
162 + 40N	D(121, J)
5243 + 2N	D(22, J) Photodiode 1
5244 + 2N	D(23, J) ANE Status 3
5499 + 9N	D(35, J) OBC Data Word ID
5500 + 9N	D(80, J) OBC Data Word 1
5501 + 9N	D(81, J) OBC Data Word 2
5502 + 9N	D(82, J) OBC Data Word 3
5503 + 9N	D(83, J) OBC Data Word 4
5504 + 9N	D(112, J) OBC Data Word 5
5505 + 9N	D(113, J) OBC Data Word 6
5506 + 9N	D(114, J) OBC Data Word 7
5507 + 9N	D(115, J) OBC Data Word 8
6651-6660	Spares

Where $0 \leq N \leq 127$ and $0 \leq J \leq 127$
J is the minor frame number in the major frame

5.2.7 Data Tape Format for UVSP Experiment

The format of the UVSP experimenter data tape is shown in Figure 5-19 and Table 5-10. The data tape will contain as many files as can be packed on one 9-track production data tape written with a density of 1600 bpi.

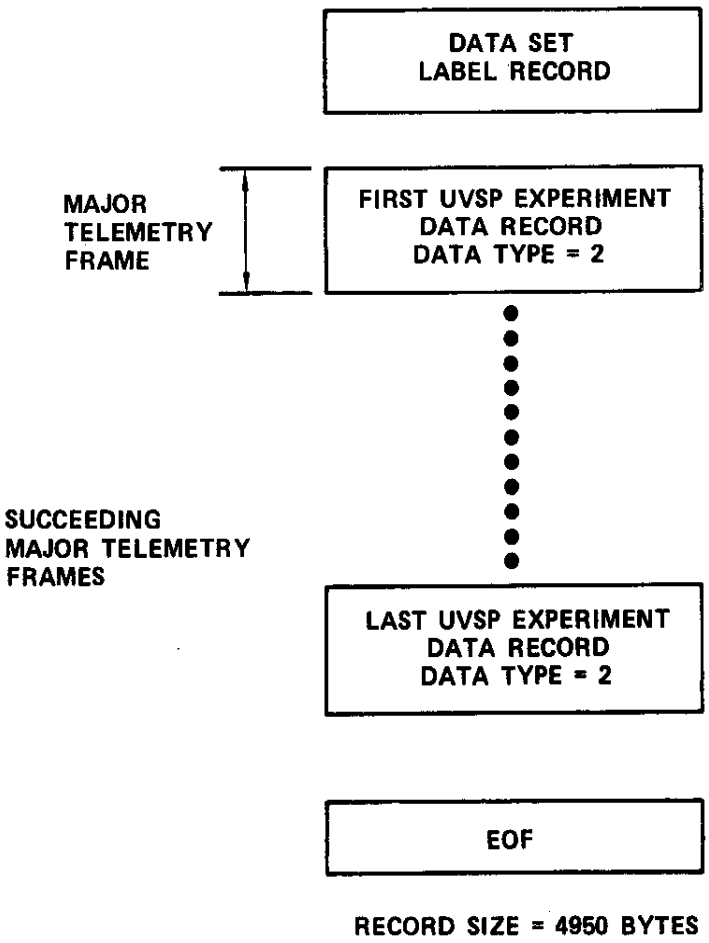

Figure 5-19. Decommutation Format for UVSP Data File

Table 5-10
SMM Data Tape Format for UVSP Experiment
(Marshall Space Flight Center)
Experiment No. 2

Byte	Description	
1	File No. of this file	
2	Data Type = 2 Data Record	
3-4	Sequential record number in data file	
5-6	Day-count from epoch 1979.0 (Day count 1 starts at 00:00:00 1/1/79)	
7-12	Milliseconds of day, U.T., at minor frame 0	
13	Spare	
14-16	Spacecraft clock at minor frame 0	
17	Minor frame pointer to format change	
18	M-Flag	
19-82	F-Map	
83+38N	D(27, J)	UVSP Data
84+38N	D(28, J)	UVSP Data
85+38N	D(29, J)	UVSP Data
86+38N	D(30, J)	UVSP Data
87+38N	D(31, J)	UVSP Data
88+38N	D(62, J)	UVSP Data
89+38N	D(63, J)	UVSP Data
90+38N	D(94, J)	UVSP Data
91+38N	D(95, J)	UVSP Data
92+38N	D(126, J)	UVSP Data
93+38N	D(127, J)	UVSP Data
94+38N	D(35, J)	OBC Data Word ID
95+38N	D(80, J)	OBC Data Word 1
96+38N	D(81, J)	OBC Data Word 2
97+38N	D(82, J)	OBC Data Word 3
98+38N	D(83, J)	OBC Data Word 4
99+38N	D(112, J)	OBC Data Word 5
100+38N	D(113, J)	OBC Data Word 6
101+38N	D(114, J)	OBC Data Word 7
102+38N	D(115, J)	OBC Data Word 8

Table 5-10 (Continued)

Byte	Description	
103+38N	D(32, J)	Subcommutator 1
104+38N	D(33, J)	Subcommutator 2
105+38N	D(96, J)	Subcommutator 3
106+38N	D(97, J)	Subcommutator 4
107+38N	D(98, J)	Subcommutator 5
108+38N	D(99, J)	Subcommutator 6
109+38N	D(87, J)	S/C Clock
110+38N	D(86, J)	S/C Clock
111+38N	D(64, J)	S/C Clock
112+38N	D(65, J)	Frame Counter
113+38N	D(66, J)	CMD Counter
114+38N	D(22, J)	S/C Data
115+38N	D(23, J)	S/C Data
116+38N	D(60, J)	S/C Data
117+38N	D(61, J)	S/C Data
118+38N	D(124, J)	S/C Data
119+38N	D(125, J)	S/C Data
120+38N	Spare	
4947-4950	Spares	

Where $0 \leq N \leq 127$ and $0 \leq J \leq 127$
J is the minor frame number in the major frame.

5.2.8 Data Tape Format for WLCP Experiment

The three possible formats of the WLCP experimenter data tape are shown in Figure 5-20 and Table 5-11, in Figure 5-21, Table 5-12, Figure 5-22 and Table 5-13. The data tape will contain as many files as can be packed on one 9-track production data tape written with a density of 1600 bpi.

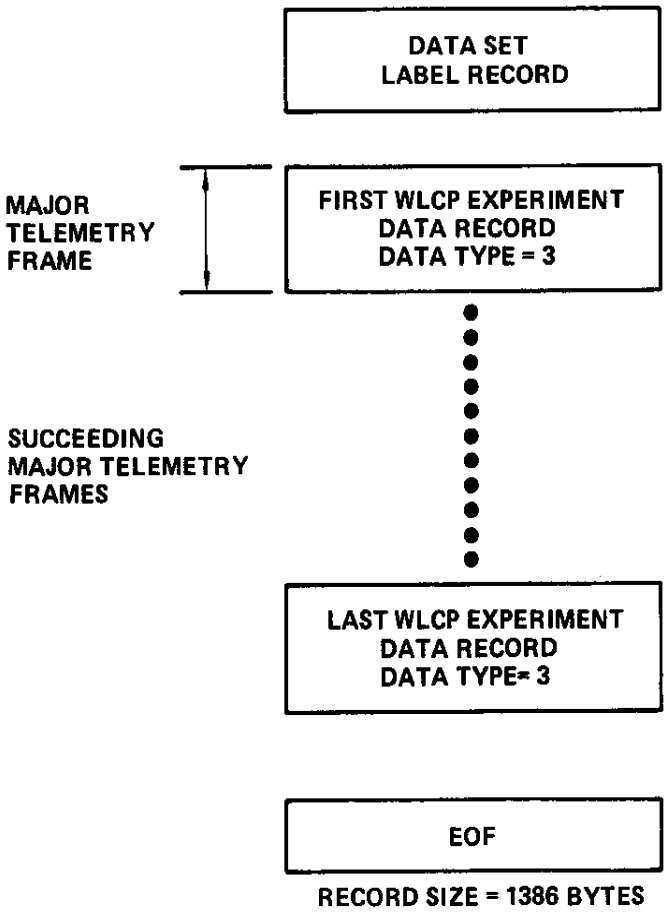

Figure 5-20. Decommutation Format for WLCP Experiment Data File

Table 5-11

SMM Data Tape Format for WLCP Experiment (High Altitude Observatory)

Experiment No. 3

Byte	Description
1	File No. of this file
2	Data type = 3 WLCP data record
3-4	Sequential record number in data file
5-6	Day-count from epoch 1979.0 (Day count 1 starts at 00:00:00 1/1/79)
7-12	Milliseconds of day, U.T., at minor frame 0
13	HAO data type (see byte 92 in label, = 1 or 3)
14-16	Spacecraft clock at minor frame 0
17	Minor frame pointer to format change
18	M-flag
19-82	F-Map
82+N	D(78, J) WLCP data word
211	D(32, 4) G2 HV status
212	D(32, 12)01 temp.
213	D(32, 20) Quad 1 temp.
214	D(32, 28) Quad 1 temp.
215	D(32, 36) Quad 2 temp.
216	D(32, 44) Quad 3 temp.
217	D(32, 52) Quad 4 temp.
218	D(32, 60) Quad 5 temp.
219	D(32, 68) Bilevel status
220	D(99, 4) HXRBS 01
221	D(99, 24) HXRBS 09
222	D(99, 27) HXRBS 10
223	D(99, 28) HXRBS 11
224	D(32, 00) Flare alert (MSB)
225	D(33, 00) Flare alert (LSB)
226	D(32, 32) Flare alert(MSB)
227	D(33, 32) Flare alert (LSB)
228	D(32, 64) Flare alert (MSB)
229	D(33, 64) Flare alert (LSB)
230	D(32, 96) Flare alert (MSB)
231	D(33, 96) Flare alert (LSB)
232+9N	D(35, J) OBC data word Id
233+9N	D(80, J) OBC data word 1
234+9N	D(81, J) OBC data word 2
235+9N	D(82, J) OBC data word 3
236+9N	D(83, J) OBC data word 4
237+9N	D(112, J) OBC data word 5
238+9N	D(113, J) OBC data word 6
239+9N	D(114, J) OBC data word 7
240+9N	D(115, J) OBC data word 8
1384	D(33, 5) FPSS 1 and 2 bilevel Sun Present/absent signal
1385-1386	Spares

Where $0 \leq N \leq 127$ and $0 \leq J \leq 127 \leq J$ is the minor frame number

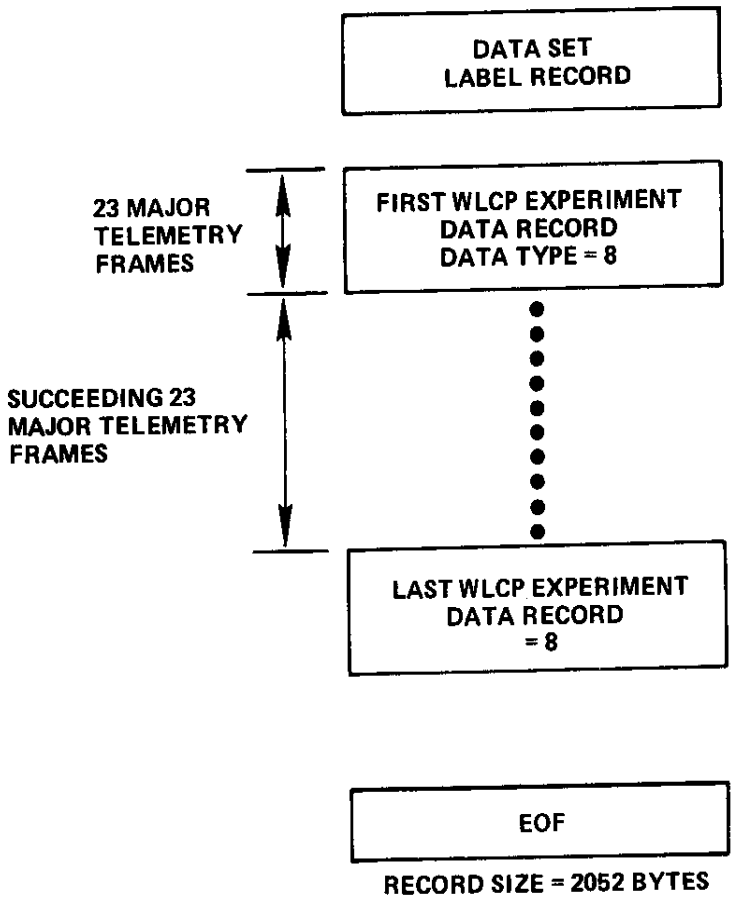

Figure 5-21. Decommutation Format for WLCP Experiment Data File (Data Type = 8)

Table 5-12
SMM Data Tape Format for WLCP Experiment
(High Altitude Observatory)
Experiment No. 3

Byte	Description
1	File No. of this file
2	Data type = 8 WLCP data record when in dwell mode, but not dwelling on word 78
3-4	Sequential record number in data file
5-6	Day count from epoch 1979.0 (Day count 1 starts at 00:00:00 1/1/79)
7-12	Milliseconds of day, U.T., at minor frame 0
13	HAO data type (see byte 92 in label, = 2)
14-16	Spacecraft clock at minor frame 0
17	Minor frame pointer to format change
18	M-Flag
19-82	F-Map
83	D(32,4) G2 HV status
84	D(32,12) 01 Temp.
85	D(32,20) 02 Temp.
86	D(32,28) Quad 1 Temp.
87	D(32,36) Quad 2 Temp.
88	D(32,44) Quad 3 Temp.
89	D(32,52) Quad 4 Temp.
90	D(32,60)
91	D(32,68) Bilevel status
92-2005	Repeat bytes 5-91 for the next 22 major frames
2006-2052	Spares

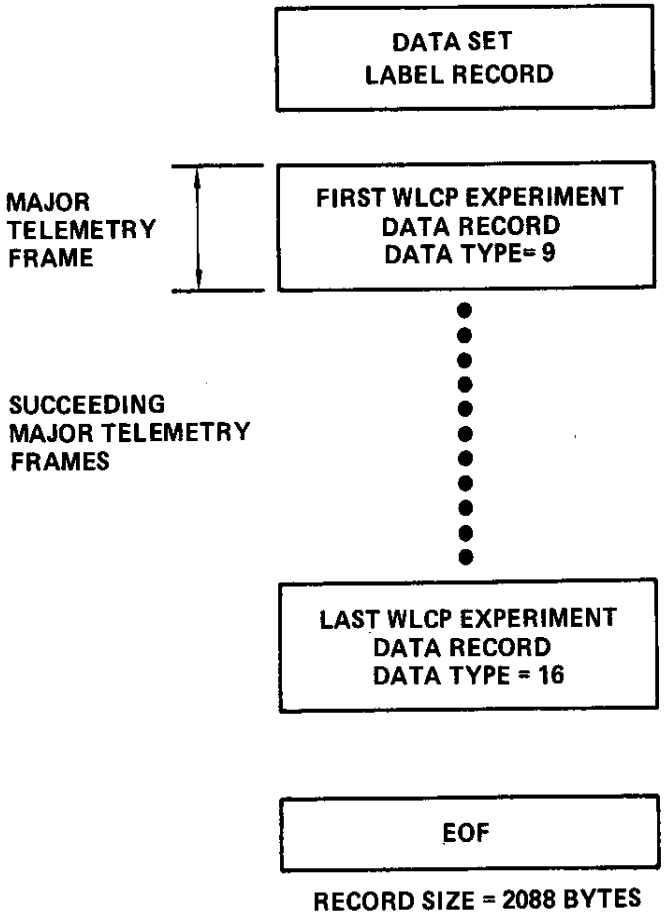

Figure 5-22. Decommutation Format for WLCP Experiment Data File (Data Type = 9)

Table 5-13
SMM Data Tape Format for WLCP Experiment
(High Altitude Observatory)
Experiment No. 3

Byte	Description
1	File No. of this file
2	Data type = 9 WLCP data record for minor frames 0-15
	= 10 for minor frames 16-31
	= 11 for minor frames 32-47
	= 12 for minor frames 48-63
	= 13 for minor frames 64-79
	= 14 for minor frames 80-95
	= 15 for minor frames 96-111
	= 16 for minor frames 112-127
3-4	Sequential record number in data file
5-6	Day count from epoch 1979.0
	(Day count 1 starts at 00:00:00 1/1/79)
7-12	Milliseconds of day, U.T., at minor frame 0
13	HAO data type (see byte 92 in label, = 5, 6, 7, or 8)
14-16	Spacecraft clock at minor frame 0
17	Minor frame pointer to format ehange
18	M-Flag
19-26	F-Map for 16 minor frames to follow
27+128N	D(3,J)
28+128N	D(4,J)
29+128N	D(5,J)
30+128N	D(6,J)
o	SMM telemetry words are further decommutated
o	in sequential order
o	o
o	o
o	o
o	o
150+128N	D(126,J)
151+128N	D(127,J)
152+128N	D(0,J)
153+128N	D(1,J)
154+128N	D(2,J)
2075-2088	Spares

Where $0 \leq N \leq 15$ and $0 \leq J \leq 15$
or $16 \leq J \leq 31$
or $32 \leq J \leq 47$
or $48 \leq J \leq 63$
or $64 \leq J \leq 79$
or $80 \leq J \leq 95$
or $96 \leq J \leq 111$
or $112 \leq J \leq 127$

Where J is the minor frame number
Note: The final data record(s) will be padded out with fill data if necessary.

5.2.9 Data Tape Format for XRP Experiment

The format of the XRP experimenter data tape is shown in Figure 5-23 and Table 5-14. The data tape will contain as many files as can be packed on one 9-track production data tape written with a density of 1600 bpi. The XRP production data tapes will be sent to the Experiment Operations Facility at GSFC. Copies of the tapes will be made available to the co-investigators at Lockheed Palo Alto Research Laboratory, Mullard Space Sciences Laboratory, and the Appleton Research Department. All tape copies will be produced at 1600 bpi tape density.

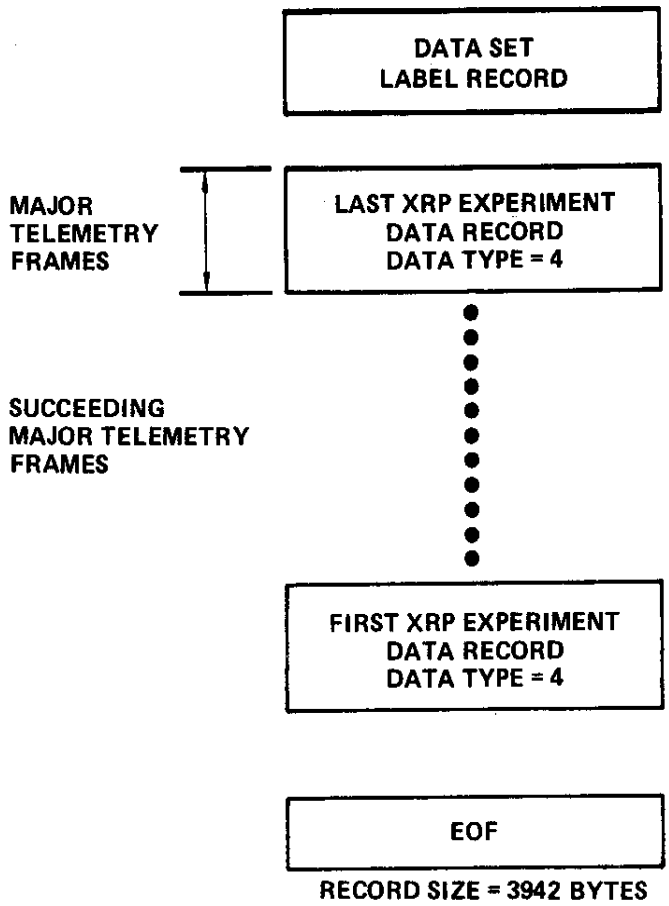

Figure 5-23. Decommutation Format for XRP Experiment Data File

Table 5-14
SMM Data Tape Format for XRP Experiment
(Lockheed Palo Alto Research Laboratory)
Experiment No. 4

Byte	Description	
1	File No. of this file	
2	Data type = 4 XRP Data Record	
3-4	Sequential record number in data file	
5-6	Day-count from epoch 1979.0	
	(Day count 1 starts at 00:00:00 1/1/79)	
7-12	Milliseconds of day, U.T., at minor frame 0	
13	Spare	
14-16	Spacecraft clock at minor frame 0	
17	Minor frame pointer to format change	
18	M-Flag	
19-82	F-Map	
83-98	Spares	
99+N	D(109, J)	
227+13M	D(10, k)	
228+13M	D(11, k)	
229+13M	D(26, k)	
230+13M	D(42, k)	
231+13M	D(43, k)	
232+13M	D(58, k)	
233+13M	D(59, k)	FCS Science Array
234+13M	D(74, k)	
235+13M	D(75, k)	
236+13M	D(106, k)	
237+13M	D(107, k)	
238+13M	D(122, k)	
239+13M	D(123, k)	
643+13L	D(10, i)	
644+13L	D(11, i)	
645+13L	D(26, i)	BCS Science Array
646+13L	D(42, i)	
647+13L	D(43, i)	
648+13L	D(58, i)	

Table 5-14 (Continued)

Byte	Description	
649+13L	D(59, i)	
650+13L	D(74, i)	
651+13L	D(75, i)	
652+13L	D(106, i)	BCS Science Array
653+13L	D(107, i)	
654+13L	D(122, i)	
655+13L	D(123, i)	
1891+9N	D(35, J)	OBC Data Word ID
1892+9N	D(80, J)	OBC Data Word 1
1893+9N	D(81, J)	OBC Data Word 2
1894+9N	D(82, J)	OBC Data Word 3
1895+9N	D(83, J)	OBC Data Word 4
1896+9N	D(112, J)	OBC Data Word 5
1897+9N	D(113, J)	OBC Data Word 6
1898+9N	D(114, J)	OBC Data Word 7
1899+9N	D(115, J)	OBC Data Word 8
3043+6N	D(32, J)	Subcommutator 1
3044+6N	D(33, J)	Subcommutator 2
3045+6N	D(96, J)	Subcommutator 3
3046+6N	D(97, J)	Subcommutator 4
3047+6N	D(98, J)	Subcommutator 5
3048+6N	D(99, J)	Subcommutator 6
3811+N	D(65, J)	S/C minor frame counter
3939-3942	Spares	

Where: $0 \leq N \leq 127$ and $0 \leq J \leq 127$
$0 \leq M \leq 32$ and $k = 0, 4, 8, \ldots 124$
$0 \leq L \leq 96$ and $i = 1, 2, 3, 5, 6, 7, 9, 10, 11, \ldots, 125, 126, 127$

J, k, or i are minor frame numbers

5.2.10 Data Tape Format for GRE Experiment

The format of the GRE experimenter data tape is shown in Figure 5-24 and Table 5-15. The data tape will contain as many files as can be packed on one 9-track production data tape written with a density of 1600 bpi.

Copies of the GRE production data tapes will be made available to the GRE co-investigators at Naval Research Laboratory (NRL) and at the Max Planck Extra-terrestial Institute (MPE) as authorized by the SMM Project. The tape copies will be 9-track tapes at 1600 bpi for MPE and 7-track tapes at 556 bpi for NRL. Presently, NRL is investigating the feasibility in converting to 9-track 1600 bpi tapes in order to reduce the tape cost.

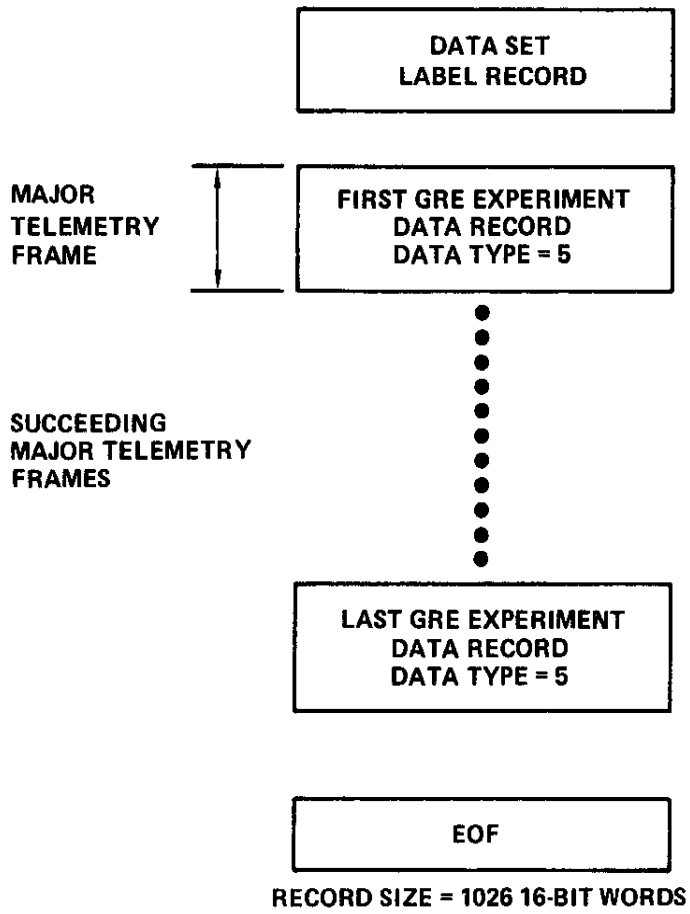

Figure 5-24. Decommutation Format for GRE Experiment Data File

Table 5-15
SMM Data Tape Format for GRE Experiment
(University of New Hampshire)
Experiment No. 5

16-bit Word	Byte	Description	
1	MSB	File No. of this file	
	LSB	Data Type = 5 GRE Data Record	
2		Sequential record number in data file	
3		Day-count from epoch 1979.0 (Day count 1 starts at 00:00:00 1/1/79)	
4-6		Milliseconds of day, U.T., at minor frame 0	
7	MSB	Spare	
	LSB		
8	MSB	Spacecraft clock at minor frame 0	
	LSB		
9	MSB	Minor frame pointer to format change	
	LSB	M-Flag	
10-41		F-Map	
42+3N	MSB	D(12,J)	
	LSB	D(13,J)	
43+3N	MSB	D(44,J)	
	LSB	D(45,J)	
44+3N	MSB	D(76,J)	
	LSB	D(77,J)	
426	MSB	D(99,04)	HXRBS 01
	LSB	D(99,24)	HXRBS 09
427	MSB	D(99,27)	HXRBS 10
	LSB	D(99,28)	HXRBS 11
428	MSB	D(32,03)	HV Control 1A
	LSB	D(32,07)	HV Control 1B
429	MSB	D(32,11)	HV Control 2A
	LSB	D(32,19)	HV Control 2B
430	MSB	D(32,23)	HV Control 3A
	LSB	D(32,29)	HV Control 3B
431	MSB	D(32,35)	HV Control 4A
	LSB	D(32,39)	HV Control 4B
432	MSB	D(32,43)	HV Control 5A
	LSB	D(32,51)	HV Control 5B
433	MSB	D(32,55)	HV Control 6A
	LSB	D(32,59)	HV Control 6B

Table 5-15 (Continued)

16-bit Word	Byte	Description	
434	MSB	D(32,67)	HV Control 7A
	LSB	D(32,71)	HV Control 7B
435	MSB	D(32,75)	HV Control 8A
	LSB	D(32,83)	HV Control 8B
436	MSB	D(32,87)	+5 V Bus A
	LSB	D(32,91)	+5 V Bus B
437	MSB	D(32,99)	+10 V Bus A
	LSB	D(32,103)	+10 V Bus B
438	MSB	D(32,107)	-10 V Bus A
	LSB	D(32,115)	-10 V Bus B
439	MSB	D(32,119)	Det. Temp. 1
	LSB	D(32,123)	Det. Temp. 2
440	MSB	D(32,49)	Elect. Temp.
	LSB	Spare	
441	MSB	D(32,00)	Flare Alert (MSB)
	LSB	D(33,00)	Flare Alert (LSB)
442	MSB	D(32,32)	Flare Alert (MSB)
	LSB	D(33,32)	Flare Alert (LSB)
443	MSB	D(32,64)	Flare Alert (MSB)
	LSB	D(33,64)	Flare Alert (LSB)
444	MSB	D(32,96)	Flare Alert (MSB)
	LSB	D(33,96)	Flare Alert (LSB)
445	MSB	D(35,0)	OBC Data Word ID
	LSB	D(80,0)	OBC Data Word 1
446	MSB	D(81,0)	OBC Data Word 2
	LSB	D(82,0)	OBC Data Word 3
447	MSB	D(83,0)	OBC Data Word 4
	LSB	D(112,0)	OBC Data Word 5
448	MSB	D(113,0)	OBC Data Word 6
	LSB	D(114,0)	OBC Data Word 7
449	MSB	D(115,0)	OBC Data Word 8
	LSB	Repeat the 9 OBC words for minor frames 1-127	
450-1020			
1021-1026		Spares	

Where $0 \leq N \leq 127$ and $0 \leq J \leq 127$

J is the minor frame number in the major frame.

5.2.11 Data Tape Format for HXRBS Experiment

The format of the HXRBS experimenter data tape is shown in Figure 5-25 and Table 5-16. The data tape will contain as many files as can be packed on one 9-track production data tape written with a density of 800 bpi.

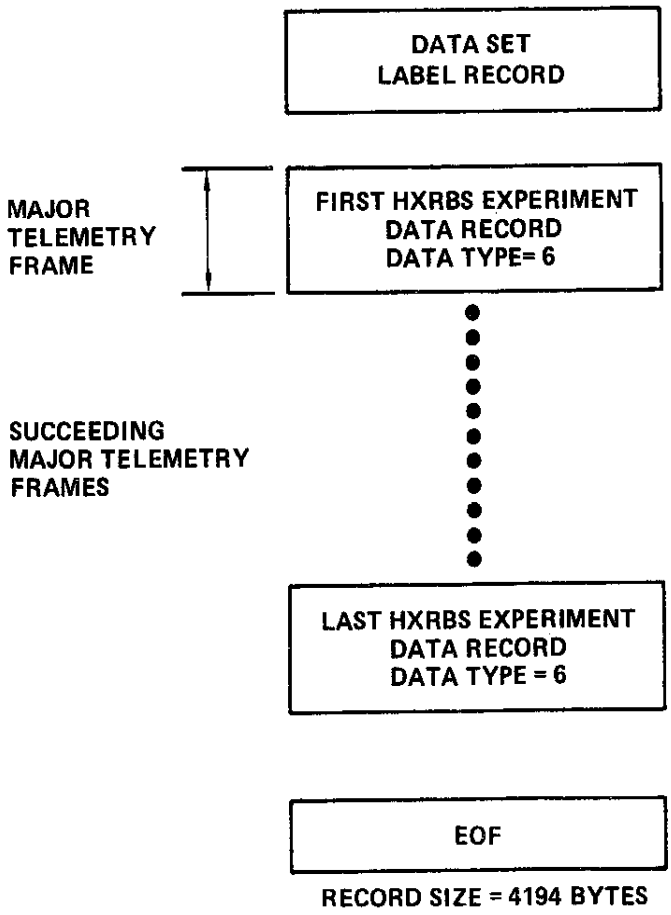

Figure 5-25. Decommutation Format for HXRBS Experiment Data File

Table 5-16
SMM Data Tape Format for HXRBS Experiment
GSFC
Experiment No. 6

Byte	Description	
1	File No. of this file	
2	Data Type = 6 Data Record	
3-4	Sequential record number in data file	
5-6	Day-count from epoch 1979.0 (Day count 1 starts at 00:00:00 1/1/79)	
7-12	Milliseconds of day, U.T., at minor frame 0	
13	Spare	
14-16	Spacecraft clock at minor frame 0	
17	Minor frame pointer to format change	
18	M-Flag	
19-82	F-Map	
83+32N	D(6,J)	HXRBS22
84+32N	D(7,J)	HXRBS23
85+32N	D(38,J)	HXRBS24
86+32N	D(39,J)	HXRBS25
87+32N	D(54,J)	HXRBS26
88+32N	D(55,J)	HXRBS27
89+32N	D(70,J)	HXRBS28
90+32N	D(71,J)	HXRBS29
91+32N	D(102,J)	HXRBS30
92+32N	D(103,J)	HXRBS31
93+32N	D(118,J)	HXRBS32
94+32N	D(119,J)	HXRBS33
95+32N	D(99,J)	Subcommutator 6
96+32N	D(93,J)	SLLRA
97+32N	D(3,J)	TM Format ID
98+32N	D(87,J)	Spacecraft Clock
99+32N	D(86,J)	Spacecraft Clock
100+32N	D(64,J)	Spacecraft Clock
101+32N	D(67,J)	Dwell and Channel ID

Table 5-16 (Continued)

Byte	Description	
102+32N	D(35,J)	OBC Data Word ID
103+32N	D(80,J)	OBC Data Word 1
104+32N	D(81,J)	OBC Data Word 2
105+32N	D(82,J)	OBC Data Word 3
106+32N	D(83,J)	OBC Data Word 4
107+32N	D(112,J)	OBC Data Word 5
108+32N	D(113,J)	OBC Data Word 6
109+32N	D(114,J)	OBC Data Word 7
110+32N	D(115,J)	OBC Data Word 8
111+32N	D(65,J)	Frame Counter
112+32N	D(O,J)	Frame Synch
113+32N	D(1,J)	Frame Synch
114+32N	D(2,J)	Frame Synch
4179-4194	Spares	

Where $0 \leq N \leq 127$ and $0 \leq J \leq 127$
J is the minor frame number in the major frame.

5.2.12 Data Tape Format for ACRIM Experiment

The format of the ACRIM experimenter data tape is shown in Figure 5-26 and Table 5-17. The data tape will contain as many files as can be packed on one 9-track production data tape written with a density of 800 bpi.

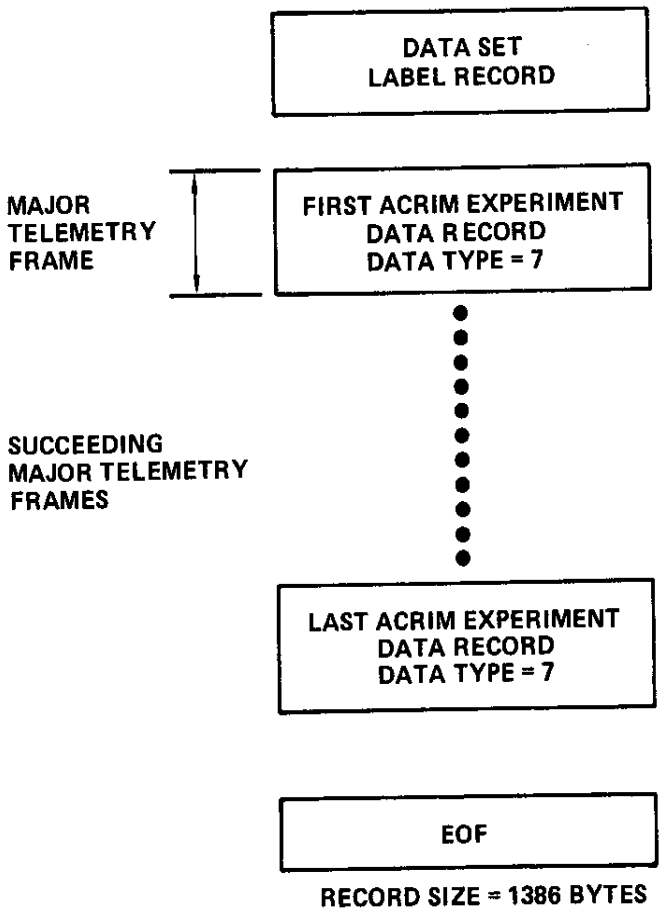

Figure 5-26. Decommutation Format for ACRIM Experiment Data File

Table 5-17
SMM Data Tape Format for ACRIM Experiment
JPL
Experiment No. 7

Byte	Description	
1	File No. of this file	
2	Data Type = 7 ACRIM Data Record	
3-4	Sequential record number in data file	
5-6	Day-count from epoch 1979.0 (Day count 1 starts at 00:00:00 1/1/79)	
7-12	Milliseconds of day, U.T., at minor frame 0	
13	Spare	
14-16	Spacecraft clock at minor frame 0	
17	Minor frame pointer to format change	
18	M-Flag	
19-82	F-Map	
83	D(32,13)	MT-1
84	D(32,15)	MT-2
85	D(32,31)	MT-3
86	D(32,45)	MT-4
87	D(32,47)	ET-1
88	D(32,63)	ET-2
89	D(32,77)	ET-3
90	D(32,79)	ET-4
91	D(32,95)	+5 V
92	D(32,00)	Flare Alert (MSB)
93	D(33,00)	Flare Alert (LSB)
94	D(32,32)	Flare Alert (MSB)
95	D(33,32)	Flare Alert (LSB)
96	D(32,64)	Flare Alert (MSB)
97	D(33,64)	Flare Alert (LSB)
98	D(32,96)	Flare Alert (MSB)
99	D(33,96)	Flare Alert (LSB)
100+N	D(108,J)	ACRIM Science Data

Table 5-17 (Continued)

Byte	Description	
228+9N	D(35, J)	OBC Data Word ID
229+9N	D(80, J)	OBC Data Word 1
230+9N	D(81, J)	OBC Data Word 2
231+9N	D(82, J)	OBC Data Word 3
232+9N	D(83, J)	OBC Data Word 4
233+9N	D(112, J)	OBC Data Word 5
234+9N	D(113, J)	OBC Data Word 6
235+9N	D(114, J)	OBC Data Word 7
236+9N	D(115, J)	OBC Data Word 8
1379-1386	Spares	

Where $0 \leq N \leq 127$ and $0 \leq J \leq 127$
J is the minor frame number in the major frame.

5.2.13 Processing of HAO Video Data

The HAO Coronograph and Polarimeter experiment utilizes a dedicated standard onboard tape recorder to accumulate most of the experiment's scientific data. The HAO tape recorder is played back at GSTDN stations and the data are forwarded to GSFC/IPD as PDF E, G, I, or K. The playback of the data is in reverse order. TELOPS will receive the four PDF's and perform a pre-edit function including the reversal of the data stream. An 1108 applications program will prepare the production data tapes of the HAO video data. The production data tapes containing the dedicated HAO tape recorder data will be 9-track tapes written with odd parity and a density of 1600 bpi. Each file will be started with a label record, as shown in Table 5-7, and will be followed by the data records, formatted as shown in Figure 5-27 and Table 5-18. Bytes 77 to 90 of the label will contain zero data because the label is not applicable to the dedicated tape recorder data. An end-of-file (EOF) mark closes a file. An end of tape is indicated by two successive EOF marks. Long tape recorder dumps of the HAO recorder may be contained on two production tapes. The M-Flag and the F-Map are described in paragraph 5.2.5.

Alternately, the HAO video can be transmitted as 256 Kbs real-time data from the spacecraft, and is in the same format as the playback data except it is in the forward direction. The data is also received at GSTDN and forwarded to IPD/GSFC as PDF C. TELOPS will perform a pre-edit function, except it will not reverse the data as performed for the HAO playback data. The UNIVAC 1108 application program will prepare the production data in the same format as previously discussed.

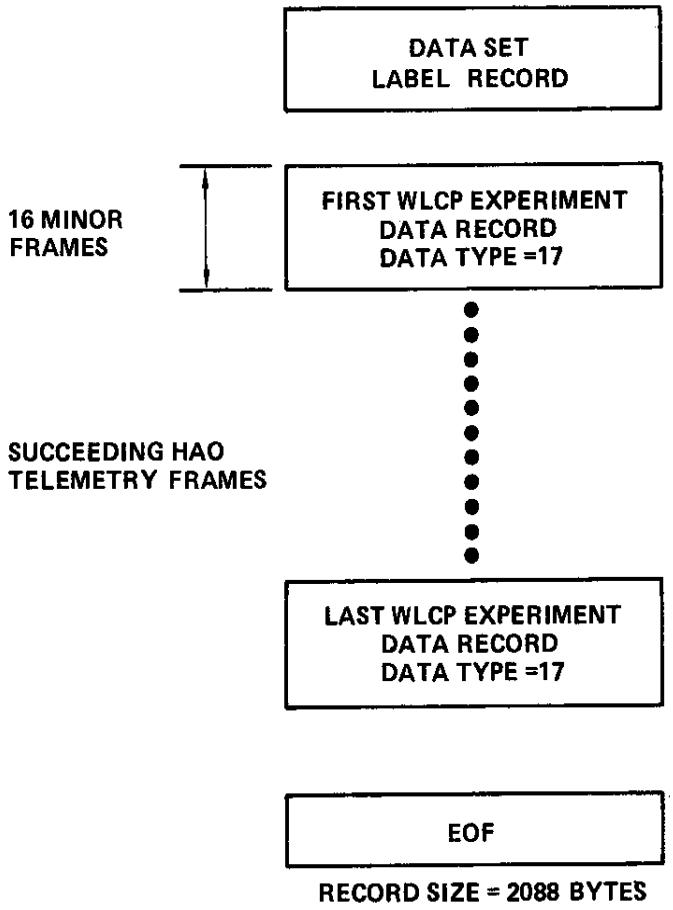

Figure 5-27. Production Tape Format for HAO Video Data File

Table 5-18
Format for Data from HAO Dedicated Tape Recorder
SMM Data Tape Format for WLCP Experiment
(High Altitude Observatory)

Byte	Description
1	File No. of this file
2	Data type = 17 HAO video data record
3-4	Sequential record number in data file
5-6	Day-count from epoch 1979.0 (Day count starts at 00:00:00 1/1/79)
7-12	Milliseconds of day, downlink dump time U.T., of first minor frame in record
13	HAO data type (see byte 92 in label, = 4)
14-17	Milliseconds of day of last minor frame in record
18	M-Flag for 16 minor frames to follow
19-26	F-Map for 16 minor frames to follow (last data record will indicate fill for padded out fill data)
27+128N	D(3,J)
28+128N	D(4,J)
29+128N	D(5,J)
30+128N	D(6,J)
o	o
o	o
o	o
o	SMM telemetry words are further decommutated in sequential order
o	o
o	o
150+128N	D(126,J)
151+128N	D(127,J)
152+128N	D(0,J)
153+128N	D(1,J)
154+128N	D(2,J)
2075-2088	Spares

Where $0 \leq N \leq 15$ and $0 \leq J \leq 15$

J represents sequential minor frames after data reversal of the downlink HAO tape recorder dump.

Note: If necessary, the last record will be padded out with zero fill data following the last minor frame of data.

5.2.14 Shipment of Data Tapes

After the analyst has analyzed the production output, he will release the output data tapes through Digital Shipping and Receiving (DS&R) by submitting to the Dispatch Office a release of shipment form with the corresponding shipping letters (one for each experimenter) attached. One copy will be kept on file by the analyst as a permanent record of released data tapes. DS&R will pack the tapes into boxes, label the boxes, and ship them by mail (regular or air mail). A tape receipt form will be attached to the outside of the tape container. Upon receipt of the tape, the experimenter will sign the receipt and mail it back to DS&R. The experimenter decommutated tapes will be distributed as listed in Table 5-19. Inventory numbers will be assigned to all tapes for control and accounting purposes.

Table 5-19
Experimenter Tape Distribution

Tape Identification	Recipient
X-1A	Dr. Peter Hoyng Space Research Laboratory Beneluxlaan 21 3527HS Utrecht The Netherlands
X-1C	Dr. George Simnett Department of Space Research University of Birmingham P. O. Box 363 Birmingham, B15 2TT United Kingdom
X-2	Dr. Richard A. Shine Code 685 Bldg. 21, Rm. 106 NASA/GSFC
X-3	Dr. Ernest Hildner High Altitude Observatory National Center for Atmospheric Research P. O. Box 3000 Boulder, CO 80307

Table 5-19 (Continued)

Tape Identification	Recipient
X-4A	Mr. D. T. Roethig Department 52-12, Building 202 Lockheed Palo Alto Research Laboratory 3251 Hanover Street Palo Alto, CA 94304
X-4B	Dr. A. H. Gabriel Astrophysics Research Division Culham Laboratory Abingdon, Oxfordshire, OX 14 3DB United Kingdom
X-4C	Dr. J. L. Culhane University College, London Mullard Space Science Laboratory Holmbury St. Mary Durking, Surrey United Kingdom
X-4D	Dr. J. C. Sherman XRP EOF Area, Bldg. 7 NASA/GSFC
X-5A	Dr. E. Chupp Physics Department University of New Hampshire Durham, NH 03824
X-5B	Dr. Gerald Share Naval Research Laboratory Code 7128.4 4555 Overlook Ave., S.W. Washington, D.C. 20375

Table 5-19 (Continued)

Tape Identification	Recipient
X-5C	Dr. C. Reppin Max Planck Institute Extra Terrestrial Physics 8046 Garching - b. Muenchen West Germany
X-6	Mr. Ken Frost Code 684 Bldg. 21, Rm. G14 NASA/GSFC
X-7	Dr. R. Willson Jet Propulsion Laboratory 4800 Oak Grove Drive Pasadena, CA 91103

5.3 QUICK-LOOK PROCESSING

5.3.1 General

Quick-look data will be processed to produce two pre-scheduled orbits of quick-look data on magnetic tape for the SMMOCC within eight hours of acquisition.

Quick-look data will also be transmitted over a data phone circuit (9.6 kbps data rate) to the experimenter at the University of New Hampshire, Durham, New Hampshire. The quick-look transmissions will normally be performed in a batch mode every day. One orbit of quick-look data is transmitted daily to the University of New Hampshire within 24 hours of acquisition. Figure 5-28 shows the data flow for quick-look processing. The quick-look data tapes for the SMMOCC will be prepared in a format as shown in Figure 5-29. The playback data will be taken from TELOPS or from the Data Capture System (DCS). A tape will then be made in the SMMOCC data tape format. The playback data are not reversed as requested by the SMMOCC.

The SMM-A experiment quick-look data transmissions will consist of spacecraft tape recorder dump data forwarded to IPD from the STDN stations. The playback data will be received by TELOPS, quality checked, unpacked from the NASCOM blocks, and reversed by the TELOPS pre-edit program. A cataloged pre-edit file is created for each tape recorder dump. The data will be edited and decommutated in the established production decom format. The GRE decom tape will be carried to a separate computer where a program will read the data from the decom tape and prepare the data for transmission to the University of New Hampshire via the data line. The data are transmitted via the duplex phone line according to the International Communications Standard X 2.5 levels 2 and 3. The transmission protocol is implemented mainly through microprocessor communications support chips available on the commercial market.

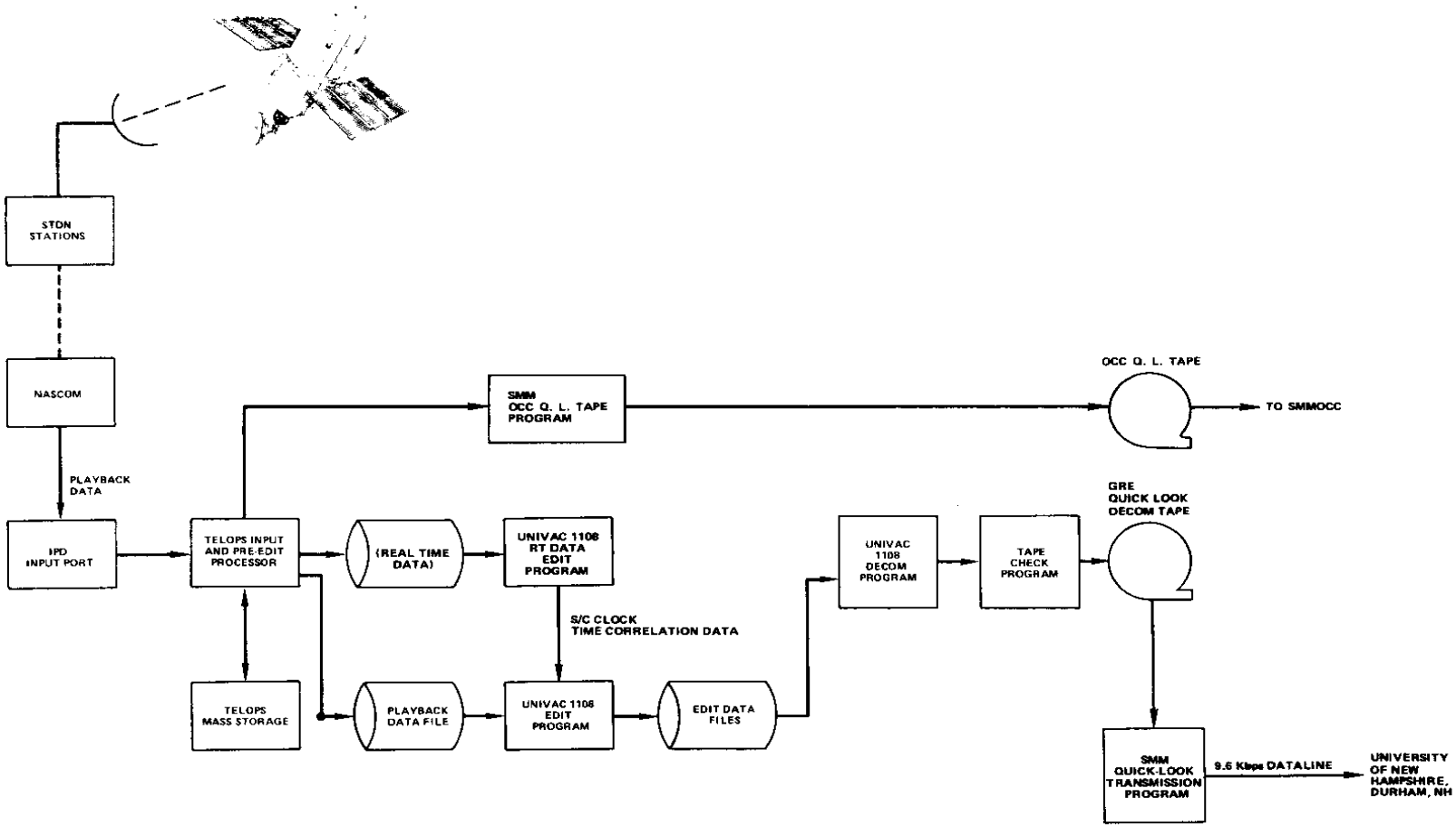

Figure 5-28. SMM Data Flow for Quick-look Processing

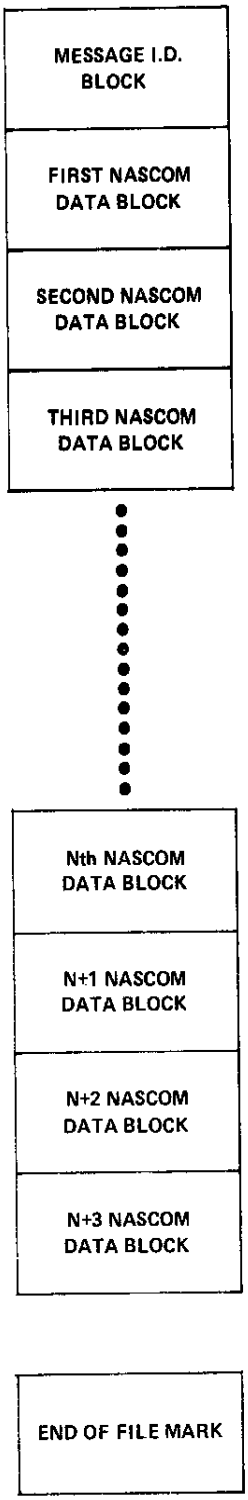

NOTE: FOUR NASCOM BLOCKS PER DATA RECORD
RECORD LENGTH = 2400 BYTES

Figure 5-29. Format of Quick-look Data Tape for SMMOCC

GLOSSARY

GLOSSARY

A

A	Analog data from an active source
Å	Angstrom unit
ACDS	Attitude control and determination system
ACRIM	Active cavity radiometer irradiance monitor
ACN	Ascension Island STDN station
ACS	Attitude Control Subsystem
AFO	Announcement of flight opportunity
AGO	Santiago, Chile STDN station
AOS	Acquisition, or arrival, of signal
AP	Application program
ATM	Apollo telescope mount

B

BDA	Bermuda STDN station
BIT NBR	Bit number assigned to a bilevel signal within data word
bpi	Bits per inch
bps	Bits per second
BSC	Block sequence count

C

C	Analog data from a passive transducer
CDHS	Command and data handling system
CH	Channel
CHAR	Character
CIIS	Control integrated information system
cm	Centimeter
CMD	Command
CMS	Command management system
CPU	Central processing unit
CRT	Cathode ray tube
CU	Central unit
C/DH	Communications and data handling subsystem

D

D	Bilevel digital data word
dB	Decibel
dBi	Decibel isotropic
dBm	Decibel referred to 1 milliwatt
deg	Degree
DIG WORD	Grouping of 8 bilevel bits into one word
DMA	Direct memory access
DOD	Department of Defense
DRL	Data Reduction Laboratory
DS&R	Digital shipping and receiving
DTU	Data transmission unit

E

EBCDIC	Extended BCD interchange code
EOF	End of file
ERTS	Earth Resources Technology Satellite (LANDSAT)
ETR	Eastern Test Range (Kennedy Space Flight Center)
e.g.	For example

F

FD	Fieldata
FM	Frequency modulation
FPTA	Focal-plane transport assembly
FRM	Frame

G

GDS	Goldstone STDN station
GMI	Goddard Management Instruction
GMT	Greenwich Mean Time
GRE	Gamma ray experiment
GSFC	Goddard Space Flight Center
GSTDN	Ground Station Tracking and Data Network
GWM	Guam STDN station

GLOSSARY (continued)

H

HAO	High Altitude Observatory
HAW	Hawaii STDN station
HGAS	High-gain antenna system
HSDL	High-speed data line
HV	High voltage
HVPS	High-voltage power supply
HXIS	Hard X-ray imaging spectrometer
HXRBS	Hard X-ray burst spectrometer

I

ICD	Interface control document
ID	Identifier, identity
*IP	Input processor (Telops module)
IP	Input processor system
IPC	Image proportional counter
IPD	Information Processing Division
IRU	Inertial reference unit
IT	Intermediate processor system
ITCS	Intermediate processor control system
ITP	Intermediate processor

J

JPL	Jet Propulsion Laboratory

K

kbps	Kilo-bits per second
keV	Kilo electron-volts
kg	Kilogram
kHz	KiloHertz
km	Kilometer
KSC	Kennedy Space Center

L

LMSC	Lockheed Missiles and Space Corp.
LOS	Loss of signal
LOX	Liquid oxygen
LSB	Least significant bit
LSD	Low-speed data

M

MBC	Message block count
MDB	Multiplex data bus
MECO	Main engine cutoff
MeV	Mega electron volts
MFW	Minor frame word
MHz	Megahertz
MICS	Management Information and Control System
MIL	Merritt Island STDN station
min	minute
MMS	Mulitmission Modular Spacecraft
MODE	Telemetry format mode
MOM	Missions Operations Manager
*MOV	Mover
MPC	Millisecond
mps	Meters per second
ms	Millisecond
MSB	Most significant bit
MSFC	Marshall Space Flight Center
MSS	Mass storage system
M & DOD	Missions and Data Operations Directorate

N

NASA	National Aeronautics and Space Administration
NASCOM	NASA Communications Network
ND	Networks Directorate
NEPA	National Environmental Policy Act
NIP	NMCS Information Processing System
NMCS	National Military Command System Support Center
nmi	Nautical mile

NOCC	Network Operations Support Center
NOSP	Network Operations Support Plan
NRZ	Nonreturn to zero
NTTF	Network test and training facility
N/A	Not applicable

O

OBA	Optical bench assembly
OBC	Onboard computer
OCC	Operations Control Center
OCXO	Oven-controlled crystal oscillator
*OFU	Online file update
OSCD	Operational Support Computing Division
OSO	Orbiting Solar Observatory

P

PAD	Project Approval Document
PCM	Pulse Code Modulator
PCU	Power control unit
PDF	Project data format
PDP	Project Development Plan
PI	Principal Investigator
PM	Phase modulation
PMP	Premodulation Processor
POCC	Project Operations Control Center
POP	Project Operating Plan
PP	Project Plan
PRMF	Pre-planned mode
PRN	Pseudorandom noise
PRU	Power Regulation Unit
PSK	Phase shift keying
PSU	Power shifting unit

Q

QUI	Quito, Ecuador, STDN station

GLOSSARY (continued)

R

*REC	Record I/O
RF	Radio frequency
RHCP	Right-hand circular polarization
RIU	Remote interface unit
R&QA	Reliability and Quality Assurance

S

sec	Second
SCP	Stored Command Processor
SC&CU	Singal control and conditioning unit
SECO	Sustainer engine cutoff
SIRD	Support Instrumentation Requirements Document
SMM	Solar Maximum Mission
SQPSK	Staggered quadriphase shift keyed
SS	Space Sciences
STACC	Standard telemetry and command components
STDN	Space Tracking and Data Network
STS	Space Transportion System
ST&DS	Space Tracking and Data Systems
S/C	Spacecraft

T

T/A	Transition Adaptor
TBD	To be determined
TDRSS	Tracking and Data Relay Satellite System
temp	Temperature
TELOPS	Telemetry on-line processing system
TM	Telemetry
TR	Tape recorder
TRW	Thompson-Ramo Wooldridge, Inc.
TTY	Teletype
T and E	Test and Evaluations

U

UBT	Universal boattail
UCL	University College London
UNH	University of New Hampshire
USB	Unified S-Band
UTC	Universal time count
UV	Ultraviolet
UVSP	Hi resolution UV spectrometer/polarimeter

V

V	Volt
Vdc	Volts direct current

W

W	Watt
WL	Wavelength
WLCP	White light chronograph/polarimeter

X

XRP	X-ray polychromator instrument
XUV	Extreme ultra violet
XTR	Experiment (HAO) tape recorder

*Refers to subsystem program within the TELOPS Input Processor System.

BIBLIOGRAPHY

BIBLIOGRAPHY

1. Support Instrumentation Requirements Document, GSFC, June 1978.

2. Guidelines for TELOPS Intermediate Processor Application Programs, GSFC, March 1977.

3. "Solar Maximum Mission Telemetry Formats and Assignments," GSFC, November 1978.

4. Data Processing Plan for High Energy Astronomy Observatory-B (HEAO-B), GSFC X-565-78-2, February 1978.

HEX DUMP OF smm-xrpycpy=8003

FILE 1 RECORD 1 4096 BYTES

(0)	01000000	00000050	0000003C	00247657	0000003C	007C965B	D4C9D340	D7F1F3F8	F0F0F6F0	F0F5F3F8
(40)	F0F0F1F0	C5F1F3F8	F0F0F6F0	F0F0F3F9	F0F0F1F0	003C0001	000002BF	00000000	000000B4	00000000
(80)	002B4280	013CA300	00040001	F0F3F2F2	F8F00000	00101111	00010111	6F000000	C5180000	09000000
(120)	01000000	50000000	3C000000	57762400	3C000000	5B967C00	C1020000	50000000	3C000000	5B967C00
(160)	3C000000	5F16D400	7F050000	50000000	3C000000	5F36D400	3C000000	62362C01	3F080000	50000000
(200)	3C000000	62362C01	3C000000	66168401	000B0000	50000000	3C000000	66168401	3C000000	6AD6DB01
(240)	C00D0000	50000000	3C000000	6AD6DB01	3C000000	6ED63302	82100000	50000000	3C000000	6ED63302
(280)	3C000000	71B68B02	43130000	50000000	3C000000	71B68B02	3C000000	7596E302	05160000	50000000
(320)	3C000000	7596E302	3C000000	79763B03	00000000	00000000	00000000	00000000	00000000	00000000
(360)	00000000	00000000	00000000	00000000	00000000	00000000	00000000	00000000	00000000	00000000
(400)	00000000	00000000	00000000	00000000	00000000	00000000	00000000	00000000	00000000	00000000
(440)	00000000	00000000	00000000	00000000	00000000	00000000	00000000	00000000	00000000	00000000
(480)	00000000	00000000	00000000	00000000	00000000	00000000	00000000	00000000	00000000	00000000
(520)	00000000	00000000	00000000	00000000	00000000	00000000	00000000	00000000	00000000	00000000
(560)	00000000	00000000	00000000	00000000	00000000	00000000	00000000	00000000	00000000	00000000
(600)	00000000	00000000	00000000	00000000	00000000	00000000	00000000	00000000	00000000	00000000
(640)	00000000	00000000	00000000	00000000	00000000	00000000	00000000	00000000	00000000	00000000
(680)	00000000	00000000	00000000	00000000	00000000	00000000	00000000	00000000	00000000	00000000
(720)	00000000	00000000	00000000	00000000	00000000	00000000	00000000	00000000	00000000	00000000
(760)	00000000	00000000	00000000	00000000	00000000	00000000	00000000	00000000	00000000	00000000
(800)	00000000	00000000	00000000	00000000	00000000	00000000	00000000	00000000	00000000	00000000
(840)	00000000	00000000	00000000	00000000	00000000	00000000	00000000	00000000	00000000	00000000
(880)	00000000	00000000	00000000	00000000	00000000	00000000	00000000	00000000	00000000	00000000
(920)	00000000	00000000	00000000	00000000	00000000	00000000	00000000	00000000	00000000	00000000
(960)	00000000	00000000	00000000	00000000	00000000	00000000	00000000	00000000	00000000	00000000
(1000)	00000000	00000000	00000000	00000000	00000000	00000000	00000000	00000000	00000000	00000000
(1040)	00000000	00000000	00000000	00000000	00000000	00000000	00000000	00000000	00000000	00000000
(1080)	00000000	00000000	00000000	00000000	00000000	00000000	00000000	00000000	00000000	00000000
(1120)	00000000	00000000	00000000	00000000	00000000	00000000	00000000	00000000	00000000	00000000
(1160)	00000000	00000000	00000000	00000000	00000000	00000000	00000000	00000000	00000000	00000000
(1200)	00000000	00000000	00000000	00000000	00000000	00000000	00000000	00000000	00000000	00000000
(1240)	00000000	00000000	00000000	00000000	00000000	00000000	00000000	00000000	00000000	00000000
(1280)	00000000	00000000	00000000	00000000	00000000	00000000	00000000	00000000	00000000	00000000
(1320)	00000000	00000000	00000000	00000000	00000000	00000000	00000000	00000000	00000000	00000000
(1360)	00000000	00000000	00000000	00000000	00000000	00000000	00000000	00000000	00000000	00000000
(1400)	00000000	00000000	00000000	00000000	00000000	00000000	00000000	00000000	00000000	00000000
(1440)	00000000	00000000	00000000	00000000	00000000	00000000	00000000	00000000	00000000	00000000
(1480)	00000000	00000000	00000000	00000000	00000000	00000000	00000000	00000000	00000000	00000000
(1520)	00000000	00000000	00000000	00000000	00000000	00000000	00000000	00000000	00000000	00000000
(1560)	00000000	00000000	00000000	00000000	00000000	00000000	00000000	00000000	00000000	00000000
(1600)	00000000	00000000	00000000	00000000	00000000	00000000	00000000	00000000	00000000	00000000
(1640)	00000000	00000000	00000000	00000000	00000000	00000000	00000000	00000000	00000000	00000000
(1680)	00000000	00000000	00000000	00000000	00000000	00000000	00000000	00000000	00000000	00000000
(1720)	00000000	00000000	00000000	00000000	00000000	00000000	00000000	00000000	00000000	00000000
(1760)	00000000	00000000	00000000	00000000	00000000	00000000	00000000	00000000	00000000	00000000
(1800)	00000000	00000000	00000000	00000000	00000000	00000000	00000000	00000000	00000000	00000000
(1840)	00000000	00000000	00000000	00000000	00000000	00000000	00000000	00000000	00000000	00000000
(1880)	00000000	00000000	00000000	00000000	00000000	00000000	00000000	00000000	00000000	00000000
(1920)	00000000	00000000	00000000	00000000	00000000	00000000	00000000	00000000	00000000	00000000
(1960)	00000000	00000000	00000000	00000000	00000000	00000000	00000000	00000000	00000000	00000000
(2000)	00000000	00000000	00000000	00000000	00000000	00000000	00000000	00000000	00000000	00000000
(2040)	00000000	00000000	00000000	00000000	00000000	00000000	00000000	00000000	00000000	00000000
(2080)	00000000	00000000	00000000	00000000	00000000	00000000	00000000	00000000	00000000	00000000
(2120)	00000000	00000000	00000000	00000000	00000000	00000000	00000000	00000000	00000000	00000000
(2160)	00000000	00000000	00000000	00000000	00000000	00000000	00000000	00000000	00000000	00000000

```
( 2200)  00000000  00000000  00000000  00000000  00000000  00000000  00000000  00000000  00000000  00000000
( 2240)  00000000  00000000  00000000  00000000  00000000  00000000  00000000  00000000  00000000  00000000
( 2280)  00000000  00000000  00000000  00000000  00000000  00000000  00000000  00000000  00000000  00000000
( 2320)  00000000  00000000  00000000  00000000  00000000  00000000  00000000  00000000  00000000  00000000
( 2360)  00000000  00000000  00000000  00000000  00000000  00000000  00000000  00000000  00000000  00000000
( 2400)  00000000  00000000  00000000  00000000  00000000  00000000  00000000  00000000  00000000  00000000
( 2440)  00000000  00000000  00000000  00000000  00000000  00000000  00000000  00000000  00000000  00000000
( 2480)  00000000  00000000  00000000  00000000  00000000  00000000  00000000  00000000  00000000  00000000
( 2520)  00000000  00000000  00000000  00000000  00000000  00000000  00000000  00000000  00000000  00000000
( 2560)  00000000  00000000  00000000  00000000  00000000  00000000  00000000  00000000  00000000  00000000
( 2600)  00000000  00000000  00000000  00000000  00000000  00000000  00000000  00000000  00000000  00000000
( 2640)  00000000  00000000  00000000  00000000  00000000  00000000  00000000  00000000  00000000  00000000
( 2680)  00000000  00000000  00000000  00000000  00000000  00000000  00000000  00000000  00000000  00000000
( 2720)  00000000  00000000  00000000  00000000  00000000  00000000  00000000  00000000  00000000  00000000
( 2760)  00000000  00000000  00000000  00000000  00000000  00000000  00000000  00000000  00000000  00000000
( 2800)  00000000  00000000  00000000  00000000  00000000  00000000  00000000  00000000  00000000  00000000
( 2840)  00000000  00000000  00000000  00000000  00000000  00000000  00000000  00000000  00000000  00000000
( 2880)  00000000  00000000  00000000  00000000  00000000  00000000  00000000  00000000  00000000  00000000
( 2920)  00000000  00000000  00000000  00000000  00000000  00000000  00000000  00000000  00000000  00000000
( 2960)  00000000  00000000  00000000  00000000  00000000  00000000  00000000  00000000  00000000  00000000
( 3000)  00000000  00000000  00000000  00000000  00000000  00000000  00000000  00000000  00000000  00000000
( 3040)  00000000  00000000  00000000  00000000  00000000  00000000  00000000  00000000  00000000  00000000
( 3080)  00000000  00000000  00000000  00000000  00000000  00000000  00000000  00000000  00000000  00000000
( 3120)  00000000  00000000  00000000  00000000  00000000  00000000  00000000  00000000  00000000  00000000
( 3160)  00000000  00000000  00000000  00000000  00000000  00000000  00000000  00000000  00000000  00000000
( 3200)  00000000  00000000  00000000  00000000  00000000  00000000  00000000  00000000  00000000  00000000
( 3240)  00000000  00000000  00000000  00000000  00000000  00000000  00000000  00000000  00000000  00000000
( 3280)  00000000  00000000  00000000  00000000  00000000  00000000  00000000  00000000  00000000  00000000
( 3320)  00000000  00000000  00000000  00000000  00000000  00000000  00000000  00000000  00000000  00000000
( 3360)  00000000  00000000  00000000  00000000  00000000  00000000  00000000  00000000  00000000  00000000
( 3400)  00000000  00000000  00000000  00000000  00000000  00000000  00000000  00000000  00000000  00000000
( 3440)  00000000  00000000  00000000  00000000  00000000  00000000  00000000  00000000  00000000  00000000
( 3480)  00000000  00000000  00000000  00000000  00000000  00000000  00000000  00000000  00000000  00000000
( 3520)  00000000  00000000  00000000  00000000  00000000  00000000  00000000  00000000  00000000  00000000
( 3560)  00000000  00000000  00000000  00000000  00000000  00000000  00000000  00000000  00000000  00000000
( 3600)  01000000  C1020000  7F050000  3F080000  000B0000  C00D0000  82100000  43130000  05160000  09000000
( 3640)  00000000  00000000  00000000  00000000  00000000  00000000  00000000  00000000  00000000  00000000
( 3680)  00000000  00000000  00000000  00000000  00000000  00000000  00000000  00000000  00000000  00000000
( 3720)  00000000  00000000  00000000  00000000  00000000  00000000  00000000  00000000  00000000  00000000
( 3760)  00000000  00000000  00000000  00000000  00000000  00000000  00000000  00000000  00000000  00000000
( 3800)  00000000  00000000  00000000  00000000  00000000  00000000  00000000  00000000  00000000  00000000
( 3840)  00000000  00000000  00000000  00000000  00000000  00000000  00000000  00000000  00000000  00000000
( 3880)  00000000  00000000  00000000  00000000  00000000  00000000  00000000  00000000  00000000  00000000
( 3920)  00000000  00000000  00000000  00000000  00000000  00000000  00000000  00000000  00000000  00000000
( 3960)  00000000  00000000  00000000  00000000  00000000  00000000  00000000  00000000  00000000  00000000
( 4000)  00000000  00000000  00000000  00000000  00000000  00000000  00000000  00000000  00000000  00000000
( 4040)  00000000  00000000  00000000  00000000  00000000  00000000  00000000  00000000  00000000  00000000
( 4080)  00000000  00000000  00000000  0200FFFF
```

HEX DUMP OF smm-xrpycpy=8003

3/1/80 - 4/2/80

FILE 1 RECORD 2 4096 BYTES

(0)	01040001	01A90000	00247657	0112B428	00FF0000	00000000	00000000	00000000	00000000	00000000
(40)	00000000	00000000	00000000	00000000	00000000	00000000	00000000	00000000	00000000	00000000
(80)	00000000	00000000	00000000	00000000	0000A4CF	8D3B4BF7	A05594CC	7F00003C	00A6A301	565827E0
(120)	98979BFF	A0A2080B	9E75A418	3B3A4B01	5D5A94FF	8C870000	888FA300	C3C2273C	C3C327CB	9899445C
(160)	9F9DA400	8C8C4B00	8BF49488	9A9F0080	C3C1A300	C4C42700	C4C49B00	797B0008	7E7AA4AD	C4C44B97
(200)	C48894A8	A6A30060	A6A3A30F	808327EF	79792710	C2C901F7	F5008251	00000000	00030318	ADFF0B00
(240)	3A000000	00000002	18ADFF0B	B0000000	00000104	0418ADFF	0B000000	00000000	020218AD	FF0B0000
(280)	00000000	01000018	ADFF0B00	0B000000	00000003	18ADFF0B	40000000	00000003	0418ADFF	0B004000
(320)	00000000	020418AD	FF0B003D	00000000	00010218	ADFF0B00	3A000000	00020103	18ADFF0B	05410000
(360)	00000000	0318ADFF	0B003C00	00000002	030418AD	FF0B0105	00000000	01010318	ADFF0B00	0B000000
(400)	00010100	18ADFF0B	91010000	00000002	0218ADFF	0B201800	00000001	010418AD	FF0B807B	00000000
(440)	00030518	ADFF0B00	3A000000	00000102	18ADFF0B	07000000	00000202	0118ADFF	0B000000	00000000
(480)	030318AD	FF0B0A00	00000000	00000218	ADFF0B00	00000000	00020207	18ADFF0B	03000000	00000102
(520)	0418ADFF	0B004000	00000000	000118AD	FF0B0440	00000000	00030318	ADFF0B00	3A000000	00010003
(560)	18ADFF0B	50410000	00000102	0418ADFF	0B001800	00000000	010318AD	FF0B608A	00000000	00050418
(600)	ADFF0B00	00000000	00000000	18ADFF0B	39FF0000	00000101	0318ADFF	0B200B00	00000001	020118AD
(640)	FF0B0000	00000000	00000000	00000000	00000000	00000000	00000000	00000000	00000000	00000000
(680)	00000000	00000000	00000000	00000000	00000000	00000000	00000000	00000000	00000000	00000000
(720)	00000000	00000000	00000000	00000000	00000000	00000000	00000000	00000000	00000000	00000000
(760)	00000000	00000000	00000000	00000000	00000000	00000000	00000000	00000000	00000000	00000000
(800)	00000000	00000000	00000000	00000000	00000000	00000000	00000000	00000000	00000000	00000000
(840)	00000000	00000000	00000000	00000000	00000000	00000000	00000000	00000000	00000000	00000000
(880)	00000000	00000000	00000000	00000000	00000000	00000000	00000000	00000000	00000000	00000000
(920)	00000000	00000000	00000000	00000000	00000000	00000000	00000000	00000000	00000000	00000000
(960)	00000000	00000000	00000000	00000000	00000000	00000000	00000000	00000000	00000000	00000000
(1000)	00000000	00000000	00000000	00000000	00000000	00000000	00000000	00000000	00000000	00000000
(1040)	00000000	00000000	00000000	00000000	00000000	00000000	00000000	00000000	00000000	00000000
(1080)	00000000	00000000	00000000	00000000	00000000	00000000	00000000	00000000	00000000	00000000
(1120)	00000000	00000000	00000000	00000000	00000000	00000000	00000000	00000000	00000000	00000000
(1160)	00000000	00000000	00000000	00000000	00000000	00000000	00000000	00000000	00000000	00000000
(1200)	00000000	00000000	00000000	00000000	00000000	00000000	00000000	00000000	00000000	00000000
(1240)	00000000	00000000	00000000	00000000	00000000	00000000	00000000	00000000	00000000	00000000
(1280)	00000000	00000000	00000000	00000000	00000000	00000000	00000000	00000000	00000000	00000000
(1320)	00000000	00000000	00000000	00000000	00000000	00000000	00000000	00000000	00000000	00000000
(1360)	00000000	00000000	00000000	00000000	00000000	00000000	00000000	00000000	00000000	00000000
(1400)	00000000	00000000	00000000	00000000	00000000	00000000	00000000	00000000	00000000	00000000
(1440)	00000000	00000000	00000000	00000000	00000000	00000000	00000000	00000000	00000000	00000000
(1480)	00000000	00000000	00000000	00000000	00000000	00000000	00000000	00000000	00000000	00000000
(1520)	00000000	00000000	00000000	00000000	00000000	00000000	00000000	00000000	00000000	00000000
(1560)	00000000	00000000	00000000	00000000	00000000	00000000	00000000	00000000	00000000	00000000
(1600)	00000000	00000000	00000000	00000000	00000000	00000000	00000000	00000000	00000000	00000000
(1640)	00000000	00000000	00000000	00000000	00000000	00000000	00000000	00000000	00000000	00000000
(1680)	00000000	00000000	00000000	00000000	00000000	00000000	00000000	00000000	00000000	00000000
(1720)	00000000	00000000	00000000	00000000	00000000	00000000	00000000	00000000	00000000	00000000
(1760)	00000000	00000000	00000000	00000000	00000000	00000000	00000000	00000000	00000000	00000000
(1800)	00000000	00000000	00000000	00000000	00000000	00000000	00000000	00000000	00000000	00000000
(1840)	00000000	00000000	00000000	00000000	00000000	00000000	00000000	00000000	00000000	00000000
(1880)	00000000	00000000	00000000	12B42601	2B426003	BC7389C4	C3485C73	0429A881	58D7E42C	A0056B73
(1920)	E7AE20E5	F000067F	FE7FFE7F	FE7FFE11	FFEB0101	0000FAFA	120003FF	FF0000FA	0027FB7E	CFB80000
(1960)	4020070F	2B0E950F	2B0E9509	53B12934	1871BE04	1BFFFFFF	C1000000	061C0000	00244539	4512294F
(2000)	751E2500	E9CBC92A	00000000	00000006	08025A03	840000FF	FE3A0102	03040506	07080000	12B42701
(2040)	2B427003	BC7389C4	C3485C73	0429A881	58DCEB26	A6056878	E7AE20E5	F000067F	FE80007F	FE7FFE11
(2080)	FFEB0101	0000FAFA	120003FF	FF0000FA	0027FB7E	CFB80000	40200A00	000A5700	00024335	3F3A1800
(2120)	3F3B1C00	36000000	00000000	00370000	00000000	00003800	00000000	00000039	00000000	00000000
(2160)	3A010203	04050607	083A0102	03040506	07080000	12B42801	2B428003	BC7389C4	C3485C73	0429A881
(2200)	58E0F21F	AB05647B	E7AE20E5	F0000680	0080007F	FE800011	FFEB0101	0000FAFA	120003FF	FF0000FA

```
( 2240)  0027FB7E  EFB40000  40202E01  01000100  01001E15  FFFE0B2B  FFFFF888  16FFFFF5  36FFA1A6  A617FFFF
( 2280)  F6ECFFFF  F7AA1800  000043FF  FFFF9319  FFFFFFDD  FFFFFF7D  1AFFFFFF  CBFFFFFF  C23A0102  03040506
( 2320)  07080000  12B42901  2B429003  BC7389C4  C3485C73  0429A881  58E3F817  AF05617F  E7AE20E5  F0000680
( 2360)  007FFE7F  FE7FFE11  FFEB0101  0000FAFB  120003FF  FF0000FA  0027FB7E  EFC40000  40202F49  0909610B
( 2400)  01014010  A0298B70  0021FE11  13FC48FB  6BFC1300  001DF152  0757FDB1  0F381E00  27E2B700  0002C91F
( 2440)  05083190  047FFFFE  20000000  00000000  002B0000  00006A7D  75000000  12B42A01  2B42A003  BC7389C4
( 2480)  C3485C73  0429A881  58E7FE10  B3055D84  E7AE20E5  F0000680  0080007F  FE7FFE11  FFEB0101  0000FAFB
( 2520)  120003FF  FF0000FA  0027FB7E  EFC40000  4020070F  2B0E950F  2B0E9526  230A9F49  84896500  3B01550A
( 2560)  80000004  003C0000  00000000  00103D10  00000000  0000003E  00000000  00000000  3F0E83AA  EAECEAFE
( 2600)  F33A0102  03040506  07080000  12B42B01  2B42B003  BC7389C4  C3485C74  0429A881  58EA040A  B7055989
( 2640)  E7AE20E5  F0000680  0080007F  FE7FFE11  FFEB0101  0000FBFA  120003FF  FF0000FA  0027FB7E  FFB40000
( 2680)  40200A00  000A3D00  00026030  00000000  00000000  31000000  00000000  00320000  00000000  00003300
( 2720)  00000000  00000034  00000000  3F3A0000  2C053B01  870181FC  FA280000  0000817F  81810000  12B42C01
( 2760)  2B42C003  BC7389C4  C3485C74  0429A881  58EE0B03  BC05548D  E7AE20E5  F0000680  0080007F  FE7FFE11
( 2800)  FFEB0101  0000FBFA  120003FF  FF0000FA  0027FB7E  FFB40000  40202E01  01000100  01001E21  80003CDC
( 2840)  7FFF9A2A  22A49541  7A000000  00230000  00000000  00002400  00000000  00000025  00000000  7F896300
( 2880)  2DF52EE8  77000141  F03A0102  03040506  07080000  12B42D01  2B42D003  BC7389C4  C3485C74  0428A881
( 2920)  58F213FC  C1055191  E7AE20E5  F0000680  0080007F  FE7FFE11  FFEB0101  0000FBFA  120003FF  FF0000FA
( 2960)  0027FB7E  FFB40000  40202F49  0909610B  01014001  4A4E76A2  300000FE  02500054  00024880  000B0000
( 3000)  0A3A0000  02DA0CFF  FF04A5FF  FF04A50D  00010002  00010002  0E000000  0001E000  C40F0000  00000000
( 3040)  FE9FE401  7FFE8000  00807FFE  7FFE7070  04000362  91287F89  63B70300  838A6505  F893F03F  0000F863
( 3080)  E00000FF  89819C53  00FF00FF  0000001B  00FF0000  00AEAFFF  6F6D6D64  4E006D6E  6F549505  7CFFFFEF
( 3120)  97210000  0068B328  0000006B  94000000  00FF0012  00002A55  63FF0000  986C2800  AFFFFF6F  4E007473
( 3160)  6B019522  74737604  6F700000  00006370  00000000  77500000  00000020  045900C0  00FC0859  006F0F81
( 3200)  00000000  7610725F  5A03A210  B8357EAA  6901B833  7E638A93  B82A7E64  95006D6D  6D00FFFF  FFFFFF65
( 3240)  00800000  29756F70  8C084373  A9282003  9611A1A3  303F9D19  0000E29E  00300000  BAC000FF  A89B8180
( 3280)  80FF0030  81818100  00300000  00002F00  00000000  44B40000  0000A0FF  00000000  93F30000  0000CDF7
( 3320)  00000000  8B010000  0074A790  0000FC8A  91B40000  00002C2C  0940FF94  53325F03  7F109F52  3A030200
( 3360)  55001B0B  375F7500  34271F7D  38047F7F  7A5D6033  62B83FF5  000053C1  6C690FA0  20A46662  39701881
( 3400)  73ACFF7C  D2B46F05  77008484  84793F7D  00000076  7C000000  0009FFFF  80008000  5C807FFE  7FFE6D70
( 3440)  00000000  45280000  005CC1D7  FFFF6E27  C9527F89  6364CAFE  848965BF  3D910000  000000C0  FFEC3B0A
( 3480)  00C0FF31  6412AF02  842F646C  55007F3B  656E7B76  818080C2  79FF8181  81689FFF  48480077  8AFFA6A5
( 3520)  ABFF0080  A69F7D80  740012B4  9B6C0000  B600007E  78008F80  FC0A7922  9DA6FF00  00300000  00008630
( 3560)  00000000  E7100000  0000001C  00000069  00000000  00660F98  00402070  00107E80  596A0004  817B5B4A
( 3600)  00007F04  5C786CA1  00005454  7E003816  3197FFFF  38183168  00803817  2956656C  3818005E  E1283381
( 3640)  B56000D6  2E7FAE97  D8003381  0092ED39  00810060  0095E29E  006E002E  B9BE009C  00EE0000  00742F12
( 3680)  00000000  E1000000  0000008F  00000081  00FF0000  0000ABFF  00000000  00010000  00960000  00000000
( 3720)  61000940  FF912400  81808177  00008181  819A0000  A17F9196  75049F7E  9200BA04  00000000  AB040000
( 3760)  00006900  02D28497  870084D3  3B7A0F93  53E6E400  AA95F700  00980094  53C1009B  000020A4  007B6600
( 3800)  18710000  0036BE14  00928081  82838485  86878889  8A8B8C8D  8E8F9091  92939495  96979899  9A9B9C9D
( 3840)  9E9FA0A1  A2A3A4A5  A6A7A8A9  AAABACAD  AEAFB0B1  B2B3B4B5  B6B7B8B9  BABBBCBD  BEBFC0C1  C2C3C4C5
( 3880)  C6C7C8C9  CACBCCCD  CECFD0D1  D2D3D4D5  D6D7D8D9  DADBDCDD  DEDFE0E1  E2E3E4E5  E6E7E8E9  EAEBECED
( 3920)  EEEFF0F1  F2F3F4F5  F6F7F8F9  FAFBFCFD  FEFF0000  00000000  00000000  00000000  00000000  00000000
( 3960)  00000000  00000000  00000000  00000000  00000000  00000000  00000000  00000000  00000000  00000000
( 4000)  00000000  00000000  00000000  00000000  00000000  00000000  00000000  00000000  00000000  00000000
( 4040)  00000000  00000000  00000000  00000000  00000000  00000000  00000000  00000000  00000000  00000000
( 4080)  00000000  00000100  00000000  0300FFFF
```

HEX DUMP OF smm-xrpycpy=8003

FILE 2 RECORD 1 4096 BYTES

(0)	01000000	00000050	0000003D	00247A8F	0000003D	007C5A93	D6D9D940	D7F1F3F8	F0F0F6F1	F0F3F1F6
(40)	F0F0F1F0	C5F1F3F8	F0F0F6F1	F0F0F3F9	F0F0F1F0	003D0001	000002C0	00000003	000000AB	00000000
(80)	003FDC00	01513B80	00040001	F0F3F2F6	F8F00000	00101111	00010111	6F000000	CA180000	09000000
(120)	01000000	50000000	3D000000	8F7A2400	3D000000	935A7C00	C2020000	50000000	3D000000	935A7C00
(160)	3D000000	973AD400	83050000	50000000	3D000000	973AD400	3D000000	9B3A2C01	45080000	50000000
(200)	3D000000	9B3A2C01	3D000000	9EFA8301	050B0000	50000000	3D000000	9EFA8301	3D000000	A2FADB01
(240)	C70D0000	50000000	3D000000	A2FADB01	3D000000	A6BA3302	85100000	50000000	3D000000	A6BA3302
(280)	3D000000	AABA8B02	47130000	50000000	3D000000	AABA8B02	3D000000	AD9AE302	08160000	50000000
(320)	3D000000	AD9AE302	3D000000	B1BA3B03	00000000	00000000	00000000	00000000	00000000	00000000
(360)	00000000	00000000	00000000	00000000	00000000	00000000	00000000	00000000	00000000	00000000
(400)	00000000	00000000	00000000	00000000	00000000	00000000	00000000	00000000	00000000	00000000
(440)	00000000	00000000	00000000	00000000	00000000	00000000	00000000	00000000	00000000	00000000
(480)	00000000	00000000	00000000	00000000	00000000	00000000	00000000	00000000	00000000	00000000
(520)	00000000	00000000	00000000	00000000	00000000	00000000	00000000	00000000	00000000	00000000
(560)	00000000	00000000	00000000	00000000	00000000	00000000	00000000	00000000	00000000	00000000
(600)	00000000	00000000	00000000	00000000	00000000	00000000	00000000	00000000	00000000	00000000
(640)	00000000	00000000	00000000	00000000	00000000	00000000	00000000	00000000	00000000	00000000
(680)	00000000	00000000	00000000	00000000	00000000	00000000	00000000	00000000	00000000	00000000
(720)	00000000	00000000	00000000	00000000	00000000	00000000	00000000	00000000	00000000	00000000
(760)	00000000	00000000	00000000	00000000	00000000	00000000	00000000	00000000	00000000	00000000
(800)	00000000	00000000	00000000	00000000	00000000	00000000	00000000	00000000	00000000	00000000
(840)	00000000	00000000	00000000	00000000	00000000	00000000	00000000	00000000	00000000	00000000
(880)	00000000	00000000	00000000	00000000	00000000	00000000	00000000	00000000	00000000	00000000
(920)	00000000	00000000	00000000	00000000	00000000	00000000	00000000	00000000	00000000	00000000
(960)	00000000	00000000	00000000	00000000	00000000	00000000	00000000	00000000	00000000	00000000
(1000)	00000000	00000000	00000000	00000000	00000000	00000000	00000000	00000000	00000000	00000000
(1040)	00000000	00000000	00000000	00000000	00000000	00000000	00000000	00000000	00000000	00000000
(1080)	00000000	00000000	00000000	00000000	00000000	00000000	00000000	00000000	00000000	00000000
(1120)	00000000	00000000	00000000	00000000	00000000	00000000	00000000	00000000	00000000	00000000
(1160)	00000000	00000000	00000000	00000000	00000000	00000000	00000000	00000000	00000000	00000000
(1200)	00000000	00000000	00000000	00000000	00000000	00000000	00000000	00000000	00000000	00000000
(1240)	00000000	00000000	00000000	00000000	00000000	00000000	00000000	00000000	00000000	00000000
(1280)	00000000	00000000	00000000	00000000	00000000	00000000	00000000	00000000	00000000	00000000
(1320)	00000000	00000000	00000000	00000000	00000000	00000000	00000000	00000000	00000000	00000000
(1360)	00000000	00000000	00000000	00000000	00000000	00000000	00000000	00000000	00000000	00000000
(1400)	00000000	00000000	00000000	00000000	00000000	00000000	00000000	00000000	00000000	00000000
(1440)	00000000	00000000	00000000	00000000	00000000	00000000	00000000	00000000	00000000	00000000
(1480)	00000000	00000000	00000000	00000000	00000000	00000000	00000000	00000000	00000000	00000000
(1520)	00000000	00000000	00000000	00000000	00000000	00000000	00000000	00000000	00000000	00000000
(1560)	00000000	00000000	00000000	00000000	00000000	00000000	00000000	00000000	00000000	00000000
(1600)	00000000	00000000	00000000	00000000	00000000	00000000	00000000	00000000	00000000	00000000
(1640)	00000000	00000000	00000000	00000000	00000000	00000000	00000000	00000000	00000000	00000000
(1680)	00000000	00000000	00000000	00000000	00000000	00000000	00000000	00000000	00000000	00000000
(1720)	00000000	00000000	00000000	00000000	00000000	00000000	00000000	00000000	00000000	00000000
(1760)	00000000	00000000	00000000	00000000	00000000	00000000	00000000	00000000	00000000	00000000
(1800)	00000000	00000000	00000000	00000000	00000000	00000000	00000000	00000000	00000000	00000000
(1840)	00000000	00000000	00000000	00000000	00000000	00000000	00000000	00000000	00000000	00000000
(1880)	00000000	00000000	00000000	00000000	00000000	00000000	00000000	00000000	00000000	00000000
(1920)	00000000	00000000	00000000	00000000	00000000	00000000	00000000	00000000	00000000	00000000
(1960)	00000000	00000000	00000000	00000000	00000000	00000000	00000000	00000000	00000000	00000000
(2000)	00000000	00000000	00000000	00000000	00000000	00000000	00000000	00000000	00000000	00000000
(2040)	00000000	00000000	00000000	00000000	00000000	00000000	00000000	00000000	00000000	00000000
(2080)	00000000	00000000	00000000	00000000	00000000	00000000	00000000	00000000	00000000	00000000
(2120)	00000000	00000000	00000000	00000000	00000000	00000000	00000000	00000000	00000000	00000000
(2160)	00000000	00000000	00000000	00000000	00000000	00000000	00000000	00000000	00000000	00000000
(2200)	00000000	00000000	00000000	00000000	00000000	00000000	00000000	00000000	00000000	00000000
(2240)	00000000	00000000	00000000	00000000	00000000	00000000	00000000	00000000	00000000	00000000

```
( 2280)  00000000  00000000  00000000  00000000  00000000  00000000  00000000  00000000  00000000  00000000
( 2320)  00000000  00000000  00000000  00000000  00000000  00000000  00000000  00000000  00000000  00000000
( 2360)  00000000  00000000  00000000  00000000  00000000  00000000  00000000  00000000  00000000  00000000
( 2400)  00000000  00000000  00000000  00000000  00000000  00000000  00000000  00000000  00000000  00000000
( 2440)  00000000  00000000  00000000  00000000  00000000  00000000  00000000  00000000  00000000  00000000
( 2480)  00000000  00000000  00000000  00000000  00000000  00000000  00000000  00000000  00000000  00000000
( 2520)  00000000  00000000  00000000  00000000  00000000  00000000  00000000  00000000  00000000  00000000
( 2560)  00000000  00000000  00000000  00000000  00000000  00000000  00000000  00000000  00000000  00000000
( 2600)  00000000  00000000  00000000  00000000  00000000  00000000  00000000  00000000  00000000  00000000
( 2640)  00000000  00000000  00000000  00000000  00000000  00000000  00000000  00000000  00000000  00000000
( 2680)  00000000  00000000  00000000  00000000  00000000  00000000  00000000  00000000  00000000  00000000
( 2720)  00000000  00000000  00000000  00000000  00000000  00000000  00000000  00000000  00000000  00000000
( 2760)  00000000  00000000  00000000  00000000  00000000  00000000  00000000  00000000  00000000  00000000
( 2800)  00000000  00000000  00000000  00000000  00000000  00000000  00000000  00000000  00000000  00000000
( 2840)  00000000  00000000  00000000  00000000  00000000  00000000  00000000  00000000  00000000  00000000
( 2880)  00000000  00000000  00000000  00000000  00000000  00000000  00000000  00000000  00000000  00000000
( 2920)  00000000  00000000  00000000  00000000  00000000  00000000  00000000  00000000  00000000  00000000
( 2960)  00000000  00000000  00000000  00000000  00000000  00000000  00000000  00000000  00000000  00000000
( 3000)  00000000  00000000  00000000  00000000  00000000  00000000  00000000  00000000  00000000  00000000
( 3040)  00000000  00000000  00000000  00000000  00000000  00000000  00000000  00000000  00000000  00000000
( 3080)  00000000  00000000  00000000  00000000  00000000  00000000  00000000  00000000  00000000  00000000
( 3120)  00000000  00000000  00000000  00000000  00000000  00000000  00000000  00000000  00000000  00000000
( 3160)  00000000  00000000  00000000  00000000  00000000  00000000  00000000  00000000  00000000  00000000
( 3200)  00000000  00000000  00000000  00000000  00000000  00000000  00000000  00000000  00000000  00000000
( 3240)  00000000  00000000  00000000  00000000  00000000  00000000  00000000  00000000  00000000  00000000
( 3280)  00000000  00000000  00000000  00000000  00000000  00000000  00000000  00000000  00000000  00000000
( 3320)  00000000  00000000  00000000  00000000  00000000  00000000  00000000  00000000  00000000  00000000
( 3360)  00000000  00000000  00000000  00000000  00000000  00000000  00000000  00000000  00000000  00000000
( 3400)  00000000  00000000  00000000  00000000  00000000  00000000  00000000  00000000  00000000  00000000
( 3440)  00000000  00000000  00000000  00000000  00000000  00000000  00000000  00000000  00000000  00000000
( 3480)  00000000  00000000  00000000  00000000  00000000  00000000  00000000  00000000  00000000  00000000
( 3520)  00000000  00000000  00000000  00000000  00000000  00000000  00000000  00000000  00000000  00000000
( 3560)  00000000  00000000  00000000  00000000  00000000  00000000  00000000  00000000  00000000  09000000
( 3600)  01000000  C2020000  83050000  45080000  050B0000  C70D0000  85100000  47130000  08160000  00000000
( 3640)  00000000  00000000  00000000  00000000  00000000  00000000  00000000  00000000  00000000  00000000
( 3680)  00000000  00000000  00000000  00000000  00000000  00000000  00000000  00000000  00000000  00000000
( 3720)  00000000  00000000  00000000  00000000  00000000  00000000  00000000  00000000  00000000  00000000
( 3760)  00000000  00000000  00000000  00000000  00000000  00000000  00000000  00000000  00000000  00000000
( 3800)  00000000  00000000  00000000  00000000  00000000  00000000  00000000  00000000  00000000  00000000
( 3840)  00000000  00000000  00000000  00000000  00000000  00000000  00000000  00000000  00000000  00000000
( 3880)  00000000  00000000  00000000  00000000  00000000  00000000  00000000  00000000  00000000  00000000
( 3920)  00000000  00000000  00000000  00000000  00000000  00000000  00000000  00000000  00000000  00000000
( 3960)  00000000  00000000  00000000  00000000  00000000  00000000  00000000  00000000  00000000  00000000
( 4000)  00000000  00000000  00000000  00000000  00000000  00000000  00000000  00000000  00000000  00000000
( 4040)  00000000  00000000  00000000  00000000  00000000  00000000  00000000  00000000  00000000  00000000
( 4080)  00000000  00000000  01000000  0200FFFF
```

HEX DUMP OF smm-xrpycpy=8003

FILE 2 RECORD 2 4096 BYTES

(0)	01040001	01AA0000	00247A8F	0113FDC0	00FF0000	00000000	00000000	00000000	00000000	00000000
(40)	00000000	00000000	00000000	00000000	00000000	00000000	00000000	00000000	00000000	00000000
(80)	00000000	00000000	00000000	00000000	000000CF	8D3B40F7	9E5B80CC	7F00003C	00A63601	565827E0
(120)	97969B00	9FA11800	9D730018	3B394001	5D5A80FF	8B850000	89903E00	C3C2273D	C3C335FE	97984A8F
(160)	9E9C0000	8C8C4000	8CF38088	989E0080	C3C24688	88882788	88889B88	797B0088	7F7900AC	88884097
(200)	888880A8	A5A20055	A4A24E0F	818427EF	79793510	C2CA0BF7	F5008211	00000000	00020418	D1000021
(240)	3B000000	00010104	18D10000	8E000000	00000000	0218D100	00240000	00000000	010218D1	00004200
(280)	00000000	02020318	D100001F	00000000	00020201	18D10000	00000000	00000003	0118D100	00204300
(320)	00000001	010518D1	00000040	00000000	01020218	D1000026	3B000000	00000102	18D10000	1C3E0000
(360)	00000102	0318D100	0024FF00	00000000	010318D1	000001FC	00000000	02020518	D100001B	00000000
(400)	00010503	18D10000	31010000	00000202	0318D100	00201800	00000001	030918D1	000080D1	00000000
(440)	03000418	D1000010	3B000000	00000305	18D10000	07000000	00000000	0318D100	00240000	00000001
(480)	010218D1	00000A00	00000000	00020418	D1000022	00000000	00000101	18D10000	03000000	00000102
(520)	0518D100	00224000	00000000	040218D1	00001A44	00000000	03030618	D1000020	3B000000	00000103
(560)	18D10000	50420000	00000004	0518D100	00211800	00000002	010218D1	00006094	00000000	00000018
(600)	D1000021	00000000	00020203	18D10000	2A080000	00000001	0518D100	001C0800	00000001	010318D1
(640)	00000000	00000000	00000000	00000000	00000000	00000000	00000000	00000000	00000000	00000000
(680)	00000000	00000000	00000000	00000000	00000000	00000000	00000000	00000000	00000000	00000000
(720)	00000000	00000000	00000000	00000000	00000000	00000000	00000000	00000000	00000000	00000000
(760)	00000000	00000000	00000000	00000000	00000000	00000000	00000000	00000000	00000000	00000000
(800)	00000000	00000000	00000000	00000000	00000000	00000000	00000000	00000000	00000000	00000000
(840)	00000000	00000000	00000000	00000000	00000000	00000000	00000000	00000000	00000000	00000000
(880)	00000000	00000000	00000000	00000000	00000000	00000000	00000000	00000000	00000000	00000000
(920)	00000000	00000000	00000000	00000000	00000000	00000000	00000000	00000000	00000000	00000000
(960)	00000000	00000000	00000000	00000000	00000000	00000000	00000000	00000000	00000000	00000000
(1000)	00000000	00000000	00000000	00000000	00000000	00000000	00000000	00000000	00000000	00000000
(1040)	00000000	00000000	00000000	00000000	00000000	00000000	00000000	00000000	00000000	00000000
(1080)	00000000	00000000	00000000	00000000	00000000	00000000	00000000	00000000	00000000	00000000
(1120)	00000000	00000000	00000000	00000000	00000000	00000000	00000000	00000000	00000000	00000000
(1160)	00000000	00000000	00000000	00000000	00000000	00000000	00000000	00000000	00000000	00000000
(1200)	00000000	00000000	00000000	00000000	00000000	00000000	00000000	00000000	00000000	00000000
(1240)	00000000	00000000	00000000	00000000	00000000	00000000	00000000	00000000	00000000	00000000
(1280)	00000000	00000000	00000000	00000000	00000000	00000000	00000000	00000000	00000000	00000000
(1320)	00000000	00000000	00000000	00000000	00000000	00000000	00000000	00000000	00000000	00000000
(1360)	00000000	00000000	00000000	00000000	00000000	00000000	00000000	00000000	00000000	00000000
(1400)	00000000	00000000	00000000	00000000	00000000	00000000	00000000	00000000	00000000	00000000
(1440)	00000000	00000000	00000000	00000000	00000000	00000000	00000000	00000000	00000000	00000000
(1480)	00000000	00000000	00000000	00000000	00000000	00000000	00000000	00000000	00000000	00000000
(1520)	00000000	00000000	00000000	00000000	00000000	00000000	00000000	00000000	00000000	00000000
(1560)	00000000	00000000	00000000	00000000	00000000	00000000	00000000	00000000	00000000	00000000
(1600)	00000000	00000000	00000000	00000000	00000000	00000000	00000000	00000000	00000000	00000000
(1640)	00000000	00000000	00000000	00000000	00000000	00000000	00000000	00000000	00000000	00000000
(1680)	00000000	00000000	00000000	00000000	00000000	00000000	00000000	00000000	00000000	00000000
(1720)	00000000	00000000	00000000	00000000	00000000	00000000	00000000	00000000	00000000	00000000
(1760)	00000000	00000000	00000000	00000000	00000000	00000000	00000000	00000000	00000000	00000000
(1800)	00000000	00000000	00000000	00000000	00000000	00000000	00000000	00000000	00000000	00000000
(1840)	00000000	00000000	00000000	00000000	00000000	00000000	00000000	00000000	00000000	00000000
(1880)	00000000	00000000	00000000	13FDBE01	3FDBE003	C17B80CA	BE4D99FE	04296DDB	C401AB8B	F105535F
(1920)	E7BE1EE6	0000067F	FE80007F	FE7FFE11	FFCC00D1	0000F7FA	12000D00	0B0000FA	0027FB7E	3FB40000
(1960)	4020076C	6618076C	66180709	7AD15F04	7A21FFF4	1B000000	02FFFFFF	8D1CFFFF	FFD54539	4512294F
(2000)	751E2500	E9CBC92A	00000000	00000006	080160FA	120000FF	FE3A0102	03040506	07080000	13FDBF01
(2040)	3FDBF003	C17B80CA	BE4D99FE	04296DDB	C404B283	F4054E62	E7BE1EE6	00000680	0080007F	FE7FFE11
(2080)	FFCC00D1	0000FAFA	12000D00	0B0000FA	0027FB7E	CFB40000	40200A00	000B0100	0001D335	3F3A0A00
(2120)	3F3B1E00	36000000	00000000	00370000	00000000	00003800	00000000	00000039	00000000	00000000
(2160)	3A010203	04050607	083A0102	03040506	07080000	13FDC001	3FDC0003	C17B80CA	BE4D99FE	04296DDB
(2200)	C407B77D	F7054A67	E7BE1EE6	00000680	0080007F	FE7FFE11	FFCC00D1	0000F9F9	12000D00	0B0000FA
(2240)	0027FB7E	AFAC0000	40202E01	01000100	01001E15	FFFF25A5	FFFFF56B	16FFFFF5	00FE29DF	A017FFFF
(2280)	F6C3FFFF	F89C1800	00000200	0000D819	FFFFFF9B	FFFFFFFF	1A000000	4D000000	443A0102	03040506