687

OHZORA

PROTON AND ELECTRON COUNT RATE

84-015A-08A

Table of Contents

1. Introduction

2. Errata/Change Log

3. LINKS TO RELEVANT INFORMATION IN THE ONLINE NSSDC INFORMATION SYSTEM

4. Catalog Materials

    a. Associated Documents

    b. Core Catalog Materials

---

1. INTRODUCTION:

The documentation for this data set was originally on paper, kept in NSSDC's Data Set Catalogs (DSCs). The paper documentation in the Data Set Catalogs have been made into digital images, and then collected into a single PDF file for each Data Set Catalog. The inventory information in these DSCs is current as of July 1, 2004. This inventory information is now no longer maintained in the DSCs, but is now managed in the inventory part of the NSSDC information system. The information existing in the DSCs is now not needed for locating the data files, but we did not remove that inventory information.

The offline tape datasets have now been migrated from the original magnetic tape to Archival Information Packages (AIP's).

A prior restoration may have been done on data sets, if a requestor of this data set has questions; they should send an inquiry to the request office to see if additional information exists.

2. ERRATA/CHANGE LOG:

NOTE: Changes are made in a text box, and will show up that way when displayed on screen with a PDF reader.

When printing, special settings may be required to make the text box appear on the printed output.

Version	Date	Person	Page	Description of Change
01				
02				

3 LINKS TO RELEVANT INFORMATION IN THE ONLINE NSSDC INFORMATION SYSTEM:

http://nssdc.gsfc.nasa.gov/nmc/

[NOTE: This link will take you to the main page of the NSSDC Master Catalog. There you will be able to perform searches to find additional information]

4. CATALOG MATERIALS:

a. Associated Documents To find associated documents you will need to know the document ID number and then click here.
http://nssdcftp.gsfc.nasa.gov/miscellaneous/documents/

b. Core Catalog Materials

OHZORA

PROTON AND ELECTRON COUNT RATE

84-015A-08A SPMS-00436

This data set consists of 14 magnetic tapes. All tapes are labelled with the exception of D-108371 which is non-labelled. The D tapes are 9-track, 6250 BPI, and the C tapes are 3480 cartridges. The D tapes were created on a FACOM computer and the C tapes were duplicated on an IBM 360 computer. The D and C tapes with their corresponding timespans are as follows:

D#	C#	HEP#*	FILES	REVOLUTION NO.	TIMESPAN
D-108362	C-032399	009	1	00112 - 02231	02/21/84 - 07/13/84
D-108363	C-032400	010	1	02232 - 04099	07/13/84 - 11/15/84
D-108364	C-032401	011	1	04080 - 05977	11/14/84 - 03/21/85
D-108365	C-032402	012	1	05977 - 06934	03/21/85 - 05/24/85
D-108366	C-032403	013	1	06934 - 07331	05/24/85 - 06/19/85
D-108367	C-032404	001	1	07322 - 09387	06/19/85 - 11/03/85
D-108368	C-032405	002	1	09387 - 10776	11/03/85 - 02/04/86
D-108369	C-032406	003	1	10776 - 13972	02/04/86 - 09/04/86
D-108370	C-032407	014	1	10803 - 11590	02/06/86 - 03/31/86
D-108371	C-032408	007	1	11525 - 12401	03/26/86 - 05/23/86
D-108372	C-032409	004	1	12401 - 13548	05/23/86 - 08/07/86
D-108373	C-032410	005	1	13610 - 15315	08/11/86 - 12/03/86
**D-108374	C-032411	008	1	15326 - 15417	12/03/86 - 12/09/86**
D-108375	C-032412	006	1	13973 - 17029	09/05/86 - 03/26/87

** The end of this tape contains 129 records which contain the date of 7/13/85 and the revolution number of 7683

* Tape Lables are HEP009, HEP010, ...

PCO

"OHZORA" (EXOS-C) Parameters

Parameter Name:	Type	Byte	Explanation
CDATE:	CHARACTER	18	YY MM MM hh mm ss
CREV:	CHARACTER:	6	satellite revolution numbers from launch
ITM(6):	INTEGER	6	date and time
IST(20):	INTEGER(I=1-12) REAL(I=13-18) INTEGER(I=19-20)		status
ORB(20):	REAL		attitude, orbit
IS1CA(10,16)	INTEGER		science data for S-1
IS2CA(10,16)	INTEGER		science data for S-2
IHEP(40)	INTEGER		instrumental conditions

(1) Details of the parameters are shown following pages.
(2) Some parameters are not opened.
(3) Closed parameters explanations are not shown in the following pages.
(4) Data readout software and print out example are sent by air mail.

NOTICE:

1. Please delete the all "OHZORA data" which is now in NSSDC, because the data are low time resolution (low bit rate date 16sec, high bit rate data 4sec).
2. And install the MT's data which I sent you on July 4.
3. I hope you will make new contour map of the particle intensity using the new MT's data, because the time resolution, opening angle of the instruments, and g-factors are changed.
4. OHZORA HEP instrumnets are operated alternatively by S-1 and S-2.
   High bit rate case: 2 sec for S-1 and 2 sec for S-2 in 16 channels.
   Low bit rate case: 8 sec for S-1 and 8 sec for S-2 in 16 channels.
5. Pitch angle data is calculated using the calibration equation for GAX, GAY, GAZ in the readout software.
6. List of contents of MT's data are sent by air-mail.

Parameter List-1 for EXOS-C "OHZORA" Magnetic Tapes

Parameter:	Document
CDATE:	Year, Month, Day, Hour, Min, Sec (YY MM DD HH MM SS)
CREV:	Revolution number from the satellite launch
ITM(I) [I=1-6]	Time data INTEGER form
ITM(1):	Year
ITM(2):	Month
ITM(3):	Day
ITM(4):	Hour
ITM(5):	Minute
ITM(6):	Second
IST(I) [I=1-20]	Status data of sensors and electronics
IST(1):	Revolution number; same data as CREV
IST(2):	Data Processing Mode (unnecessary for data analysis)
IST(3):	=1 Real mode observation; or =0 Record mode observation
IST(4):	Bit rate 1=high 8192 bps; 0=low 2048 bps
IST(5)-(12):	01 command answer back (unnecessary for data analysis)
IST(13):	Temperature of electronics circuit (°C)
IST(14):	Temperature of sensors (°C)
IST(15):	High voltage - sensor1 (V)
IST(16):	High voltage - sensor2 (V)
IST(17):	Reference voltage 1 (V)
IST(18):	Calibration voltage 2 (V)
IST(19):	Missing frame number
IST(20):	Effective frame number
ORB(I) [I=1-20]	Satellite orbital data
ORB(1):	Latitude in degree (location of satellite)
ORB(2):	East longitude in degree
ORB(3):	Altitude in km
ORB(4):	Magnetic latitude in deg
ORB(5):	L-value
ORB(6):	B-value in gamma
ORB(7):	Local time in hour
ORB(8):	Magnetic local time in hour
ORB(9):	Cyclotron frequency in Hz
ORB(10):	=0.0 sunshine; =1.0 shadow (sunshine or not)
ORB(11):	GAX in gamma (Magnetic field X component)
ORB(12):	GAY (Y component)
ORB(13):	GAZ (Z component)
ORB(14):	Pitch angle of sensor-1 in degree
ORB(15):	Pitch angle of sensor-2 in degree
ORB(16):	Always -1.0
ORB(17):	blank
ORB(18):	GAX (4 GAX data/4 or 16sec)
ORB(19):	GAY (4 GAY data/4 or 16sec)
ORB(20):	GAZ (4 GAZ data/4 or 16sec)

Parameter List-2 for EXOS-C "OHZORA" Magnetic Tapes

Paremeter	Document
IHEP(I) [I=1-46]	Detector and Electronics status (no physical meaning)
IHEP(1):	S1 LLD-A Sensor 1 Low Level Discriminator output of detector-A
IHEP(2):	LLD-B detector-B
IHEP(3):	LLD-C detector-C
IHEP(4):	LLD-D detector-D
IHEP(5):	LLD-E detector-E
IHEP(6):	S1 C1 Sensor 1: Signal of coincidence mode
IHEP(7):	C2
IHEP(8):	C3
IHEP(9):	C4
IHEP(10):	C6
IHEP(11):	C7
IHEP(12):	C8
IHEP(13):	C9
IHEP(14):	C10
IHEP(15):	C13
IHEP(16):	S2 LLD-A Sensor 2 Low Level Discriminator output of detector-A
IHEP(17):	LLD-B detector-B
IHEP(18):	LLD-C detector-C
IHEP(19):	LLD-D detector-D
IHEP(20):	LLD-E detector-E
IHEP(21):	S2 C1 Sensor 2 signal of coincidence mode
IHEP(22):	C2
IHEP(23):	C3
IHEP(24):	C4
IHEP(25):	C6
IHEP(26):	C7
IHEP(27):	C8
IHEP(28):	C9
IHEP(29):	C10
IHEP(30):	C13
IHEP(31):	STA-10 Mode-4/Mode-4
IHEP(32):	-20 -12V on/off
IHEP(33):	-30 Write status WRT/EXE
IHEP(34):	-40 S1 on/off
IHEP(35):	-50 S2 on/off
IHEP(36):	-60 Cal/Sig yes/no
IHEP(37):	-70 Cal/Step MSB
IHEP(38):	-80 Cal/Step LSB
IHEP(39):	STA-11 (the same above)
IHEP(40):	-21
IHEP(41):	-31
IHEP(42):	-41
IHEP(43):	-51
IHEP(44):	-61
IHEP(45):	-71
IHEP(46):	-81

Parameter List-3 for EXOS-C "OHZORA" Magnetic Tapes

Electron and Proton Parameter

IS1CA(I,J) [I=1-7, J=1-16] for Sensor 1
IS2CA(I,J) [I=1-7, J=1-16] for Sensor 2

Documents: Pulse Height Analyzer Energy Steps [SCA: (MeV)]

	I=1 SCA - 1 delta-E	I=2 SCA - 2 Electron	I=3 SCA - 3 Proton
J= 1	-	-	-
J= 2	[these data are closed]	-	-
J= 3	-	-	-
J= 4	-	-	-
J= 5	-	-	-
J= 6	-	-	-
J= 7	-	-	-
J= 8	-	-	-
J= 9	-	-	-
J=10	-	-	-
J=11	-	-	-
J=12	-	-	-
J=13	-	-	-
J=14	-	-	-
J=15	-	-	-
J=16	-	-	-

SCALER (SCL) Counting Number of Particles (SCL:Scaler)

I=4	I=5	I=6	I=7	I=8	I=9	I=10
SCL-1	SCL-2	SCL-3	SCL-4	SCL-5	SCL-6	SCL-7
delta-E	Electron	Proton	E_A	Proton	Helium	Helium

*** Energy Region of SCALER

I=4 SCL-1 Electron 0.05 - 0.18 MeV and Proton 0.64 - 3.3 MeV
I=5 SCL-2 Electron 0.19 - 3.2 MeV
I=6 SCL-3 Proton 0.64 - 3.3 MeV + 3.3-35 MeV
(NOTICE: protons 3.3-35MeV negligibly low intensity)
I=7 SCL-4 Counting number of anti-detector E_A
I=8 SCL-5 Proton > 560 MeV
I=9 SCL-6 He 4.8 - 13. MeV
I=10 SCL-7 He 13.0 - 140. MeV

*** J=1 to 16 : time sequence low-bit-rate case total count for t=16/16 sec
high-bit-rate case total count for t=4/16 sec

*** Oberved time is a half of this period, because observation is made S-1 or S-2 alternatively.

*** Geometrical factor G= 0.84 cm^2.sr for SCA-1, SCL-6
G= 0.14 cm^2.sr for SCA-2, SCA-3, SCL-4, SCL-5, SCL-7,

*** Flux is obtained ISICA(I,J)/(t*G) I=5 or 6

*** where t=16/32=0.5 sec in low bit rate case,
t=4/32 =0.125 sec in high bit rate case.
(NOTICE: Data are obtained S-1 and S-2 alternately, observation time of each sensor is a half of a telemetry time.)

```
/*****************************************************************************:
/***** "EXC-READ.c"
/*****  Data read from disk, /usr/EXOS_C/EXOS_C.dat/C_1_1.dat
/*****
/*****                                    by M.Fujii revised Nagata
/*****
/*****                                     1994.11.16/1995.8.8
/*****************************************************************************:

#include        <stdio.h>
#include        <math.h>
#include        <stdlib.h>
#include        <string.h>
#include        <fcntl.h>
#include        <time.h>

#define BIT(x,b) (((x) & (b)) !=0 ? 1:0)
#define B00     (0x80)
#define B01     (0x40)
#define B02     (0x20)
#define B03     (0x10)
#define B04     (0x08)
#define B05     (0x04)
#define B06     (0x02)
#define B07     (0x01)
#define BNL     (0x00)
#define DDIR    /usr2/home1/fujii/EXOSC
#define DEVI    /dev/nrst1

#define ushort  unsigned short
#define REC     100
FILE    *fpinp,*fpout;
char    DataFile[100],RecDev[100];
int     rn;

/******  読み込むデータの構造体（データ形式の違いのため便宜上３つに分けています）******,
struct{
        short   head;
        char    TIME[18];
        char    CREV[6];
        }EXOSC1;

struct{
        int     TIMES[6];
        int     IST1[12];
        char    IST2[6][4];
        int     IST3[2];
        char    ORB[20][4];
        }EXOSC2;

struct{
        int     IS1CA[16][10];
        int     IS2CA[16][10];
        int     IHEP[46];
        }EXOSC3;

/****** 落とすデータの構造体（ここでは個々のデータのバイト数が上と同じにしてあります）*:
struct{
        char    CDATA[18];
        char    CREV[6];
        int     TIME[6];
        int     IST1[18];
        float   IST2[6];
        int     IST3[2];
        float   ORB1[17];
        unsigned char   ORB2[3][4];
```

P2

```
        int     IS1CA[16][10];
        int     IS2CA[16][10];
        float   pitch1[16];
        float   pitch2[16];
        int     IHEP[46];
        }EXOS_C;

/******* 大型計算機で取り扱う実数型のデータからUNIXで扱うfloatへの変換 *************/
float IBM_IEEE(UUU)
char UUU[4];
        {
        int i,j;
        float SS,AA,FF,HHH;
        char s[100];
        FF=0.0;
        if(BIT(UUU[0],B00)==1)  SS=-1.0;
        else                    SS=1.0;
        AA=(float)(UUU[0] & 0x7f);

        FF += (float)BIT(UUU[1],B00) * pow(0.5,1.0);
        FF += (float)BIT(UUU[1],B01) * pow(0.5,2.0);
        FF += (float)BIT(UUU[1],B02) * pow(0.5,3.0);
        FF += (float)BIT(UUU[1],B03) * pow(0.5,4.0);
        FF += (float)BIT(UUU[1],B04) * pow(0.5,5.0);
        FF += (float)BIT(UUU[1],B05) * pow(0.5,6.0);
        FF += (float)BIT(UUU[1],B06) * pow(0.5,7.0);
        FF += (float)BIT(UUU[1],B07) * pow(0.5,8.0);

        FF += (float)BIT(UUU[2],B00) * pow(0.5,9.0);
        FF += (float)BIT(UUU[2],B01) * pow(0.5,10.0);
        FF += (float)BIT(UUU[2],B02) * pow(0.5,11.0);
        FF += (float)BIT(UUU[2],B03) * pow(0.5,12.0);
        FF += (float)BIT(UUU[2],B04) * pow(0.5,13.0);
        FF += (float)BIT(UUU[2],B05) * pow(0.5,14.0);
        FF += (float)BIT(UUU[2],B06) * pow(0.5,15.0);
        FF += (float)BIT(UUU[2],B07) * pow(0.5,16.0);

        FF += (float)BIT(UUU[3],B00) * pow(0.5,17.0);
        FF += (float)BIT(UUU[3],B01) * pow(0.5,18.0);
        FF += (float)BIT(UUU[3],B02) * pow(0.5,19.0);
        FF += (float)BIT(UUU[3],B03) * pow(0.5,20.0);
        FF += (float)BIT(UUU[3],B04) * pow(0.5,21.0);
        FF += (float)BIT(UUU[3],B05) * pow(0.5,22.0);
        FF += (float)BIT(UUU[3],B06) * pow(0.5,23.0);
        FF += (float)BIT(UUU[3],B07) * pow(0.5,24.0);
        HHH = FF*pow(16.0,(AA-64.0))*SS;
        return (HHH);
        }
/*************    main  ***************************************************************,
main()
{
        int     istart,  n;
        int     imax;

                istart=100;  rn=1;  n=0;
                imax=istart+19;
        if ((fpinp=fopen("/usr3/EXOS-C/EXOS-C.dat/C_1_1.dat","rb"))==NULL){ printf("Cant

        do {
                read_data();
                if(EXOS_C.IST1[0]==850){ n++;
                if(n>istart) {
                                pitch_angle();
                                print_data();}
        /*      printf("\n  n=%2d",n);  */
                if(n>imax) exit();
```

P3

```
                }
        }while(1);
        fclose(fpinp);
}


/************** main文 (この中でデータを読み変換し新しいファイルに落とします。) *******:
read_data()
        {
        int i,j;
        char UUU[4];
        int u;
        short c;
        float dd,dd2;
        ushort d[20];
        int     ch;

                rn=fread(&EXOSC1, sizeof(EXOSC1), 1, fpinp);
                fread(&EXOSC2,    sizeof(EXOSC2), 1, fpinp);
                fread(&EXOSC3,    sizeof(EXOSC3), 1, fpinp);
                fread(&c,         sizeof(short),  1, fpinp);

                /********** 2バイト"空き"があります *****/
                /********** READ CDATE (_YY_MM_DD_HH_mm_ss) ***********/
                for(i=0;i<18;i++)
                {
                if(EXOSC1.TIME[i] == 0x40) d[i]=0;
                else d[i]=(ushort)(EXOSC1.TIME[i]&0x0f);
                }
                sprintf(EXOS_C.CDATA," %hd%hd %hd%hd %hd%hd %hd%hd %hd%hd %hd%hd",d[1],(
                /********** READ CREV (Count) ***********/
                for(i=0;i<6;i++)
                {
                if(EXOSC1.CREV[i] == 0x40) d[i]=0;
                d[i]=(ushort)(EXOSC1.CREV[i]&0x0f);
                }
                sprintf(EXOS_C.CREV,"%hd%hd%hd%hd%hd%hd",d[0],d[1],d[2],d[3],d[4],d[5]),
                /********** READ ITM (TIME) ***********/
                for(i=0;i<6;i++)        EXOS_C.TIME[i] =(int)EXOSC2.TIMES[i];
                /********** READ IST (Status) ***********/
                for(i=0;i<12;i++)       EXOS_C.IST1[i] =(int)EXOSC2.IST1[i];
                for(i=12;i<18;i++)
                {
                                for(j=0;j<4;j++) UUU[j] = EXOSC2.IST2[i-12][j];
                                EXOS_C.IST2[i-12] = IBM_IEEE(UUU);
                }
                for(i=18;i<20;i++)      EXOS_C.IST3[i-18] =(int)EXOSC2.IST3[i-18];
                /********** READ ORB (Orbit) ***********/
                for(i=0;i<17;i++)
                {
                                for(j=0;j<4;j++) UUU[j] = EXOSC2.ORB[i][j];
                                EXOS_C.ORB1[i] = IBM_IEEE(UUU);
                }
                for(i=17;i<20;i++)
                {
                                for(j=0;j<4;j++) EXOS_C.ORB2[i-17][j]=EXOSC2.ORB[i][j];
                }
                /********** READ ISCA (HEP DATA) *********/
                for(i=0;i<16;i++)
                {
                        for(j=0;j<10;j++)
                        {
                                EXOS_C.IS1CA[i][j]=(int)EXOSC3.IS1CA[i][j];
                                EXOS_C.IS2CA[i][j]=(int)EXOSC3.IS2CA[i][j];
                        }
                }
```

P4

```
                /********** READ IHEP (HEP Monitor) ********/
                for(i=0;i<48;i++)        EXOS_C.IHEP[i]=(int)EXOSC3.IHEP[i];
}
        /****************    PITCH ANGLE  S-1  S-2      ****************/
pitch_angle()
{
        int     i, j;
        float   DGAY, DGAI, DGAJ, GAX, GAY, GAZ, GAF, DGAx, DGAy, DGAz, rad;

                rad=180./3.1415926;

        for(j=0; j<4; j++){
                GAX=-49998.4677+391.9548*(float)EXOS_C.ORB2[0][j];
                GAY=-50196.7935+392.2502*(float)EXOS_C.ORB2[1][j];
                GAZ=-50374.3196+393.8753*(float)EXOS_C.ORB2[2][j];

                GAF=sqrt(GAX*GAX+GAY*GAY+GAZ*GAZ);

                DGAx=GAX/GAF;
                DGAy=GAY/GAF;
                DGAz=GAZ/GAF;

                EXOS_C.pitch1[4*j+1]=acos(-DGAz)*rad;
                EXOS_C.pitch2[4*j+1]=acos( DGAy)*rad;
                }
        return(0);
}
        /*****************   PRINT OUT  EXOS_C  DATA    ****************/
print_data()
{
        int i,j,ch;

                        printf("\n\n TIME:%2d/%2d/%2d %2d:%2d:%2d ",
                        EXOS_C.TIME[0],EXOS_C.TIME[1],EXOS_C.TIME[2],EXOS_C.TIME[3],EXO
                        printf(" REV:%5d,     BIT:%hd, DP-MODE:%2d, 01COM:%2d%2d%2d,  RI
                        EXOS_C.IST1[0],EXOS_C.IST1[3],EXOS_C.IST1[1],EXOS_C.IST1[6],EXO
                        printf(" Temp-E:%4.1f  Temp-S:%4.1f  ", EXOS_C.IST2[0],EXOS_C.IS
                        printf("\n                                        VOLTAGE  HV-1:%
                                                EXOS_C.IST2[2],EXOS_C.IST2[3],E
                        printf(" GA,X,Y,Z: %7.4f  %7.4f  %7.4f   ",EXOS_C.ORB1[10],EXOS_
                        printf("\n                                        ");
                        printf("LAT:%5.1f  LON:%5.1f  ALT:%5.1f  MLAT:%5.1f  L:%5.1f  B
                                EXOS_C.ORB1[0],EXOS_C.ORB1[1],EXOS_C.ORB1[2],EXOS_C.ORB
                                EXOS_C.ORB1[6],EXOS_C.ORB1[7],EXOS_C.ORB1[9]);
                        printf("\n                                        ");
                        printf("PIT1:%5.1f  PIT2:%5.1f  SPIN:%9.3f",
                                EXOS_C.ORB1[13],EXOS_C.ORB1[14],EXOS_C.ORB1[15]);
                        printf("\n  SENSOR - 1
                        printf("\n  ch   SCA1   SCA2   SCA3   SCL1   SCL2   SCL3  SCL4
                        printf("   ch   SCA1   SCA2   SCA3   SCL1   SCL2   SCL3  SCL4  S
                        for(i=0; i<16; i++){ ch=i+1;
                                printf("\n  %2d",ch);
                                for(j=0; j<6; j++) printf("%7d",EXOS_C.IS1CA[i][j]);
                                for(j=6; j<10; j++) printf("%6d",EXOS_C.IS1CA[i][j]);
                                printf("   %2d",ch);
                                for(j=0; j<6; j++) printf("%7d",EXOS_C.IS2CA[i][j]);
                                for(j=6; j<10; j++) printf("%6d",EXOS_C.IS2CA[i][j]);
                                printf(" %5.1f  %5.1f",EXOS_C.pitch1[i], EXOS_C.pitch2[:
                                }
}

                /*****************************************/
```

TIME:84/ 4/11 11:14:56 REV: 850, BIT:0, DP-MODE: 3, 01COM: 3 3 3, REAL-REC:12 Temp-E:11.7 Temp-S: 8.7
VOLTAGE HV-1:148.3, HV-2:146.9, Ref.V:13.4, Cal.V: 0.0 GA,X,Y,Z: -15898.3985 6207.2422 -3503.1680
LAT:-16.7 LON:291.6 ALT:854.7 MLAT: -5.5 L: 1.3 B:16995.3 LT: 6.7 MLT: 6.7 D/N:0.0
PIT1: 78.5 PIT2: 68.9 SPIN: -1.000

SENSOR - 1											SENSOR - 2											
ch	SCA1	SCA2	SCA3	SCL1	SCL2	SCL3	SCL4	SCL5	SCL6	SCL7	ch	SCA1	SCA2	SCA3	SCL1	SCL2	SCL3	SCL4	SCL5	SCL6	SCL7	PITCH1	PITCH2
1	130	129	1357	13946	11706	13799	20	53	1	1	1	0	15	7	15889	9144	15808	8	40	0	0	0.0	0.0
2	133	145	2	13970	11648	13790	2	37	0	0	2	146	131	1875	17021	8178	15893	12	56	2	1	78.5	68.9
3	142	156	0	13854	11704	13718	23	60	0	0	3	210	162	21	18238	6976	15356	25	47	1	0	0.0	0.0
4	153	140	3	13859	11837	13710	8	39	0	0	4	243	126	9	19165	5568	14196	9	71	2	0	0.0	0.0
5	262	275	0	13792	11772	13661	4	39	1	1	5	270	112	11	19429	3948	12256	20	117	1	0	0.0	0.0
6	297	281	1	13619	11721	13542	2	40	1	1	6	828	145	27	17456	2368	8988	15	32	0	0	78.5	49.3
7	572	465	0	13730	11731	13566	1	39	0	0	7	922	80	8	13104	1184	5388	13	108	1	0	0.0	0.0
8	951	812	1	13465	11660	13404	5	33	2	2	8	291	56	6	7947	617	2428	6	97	2	0	0.0	0.0
9	1101	1025	1	13446	11967	13331	4	39	2	1	9	63	28	3	5017	453	1115	31	107	0	0	0.0	0.0
10	885	851	0	13355	11974	13352	10	41	1	0	10	18	9	2	3891	366	747	24	91	1	0	78.5	31.6
11	439	606	1	13306	11858	13258	20	57	1	0	11	11	10	0	3262	366	601	17	95	0	0	0.0	0.0
12	83	195	0	13241	11949	13207	6	47	0	0	12	6	18	2	2780	329	498	18	92	3	0	0.0	0.0
13	3	30	0	13258	11954	13207	20	62	1	1	13	7	14	0	2412	317	471	8	95	5	0	0.0	0.0
14	0	4	0	13068	12125	13135	8	43	0	0	14	3	13	0	2137	281	409	14	106	1	0	78.2	15.6
15	0	1	0	13110	12088	13103	6	49	0	1	15	0	17	1	1907	259	374	13	16	2	0	0.0	0.0
16	0	2	0	12964	12112	12982	5	42	2	2	16	4	17	0	1938	293	356	14	124	2	0	0.0	0.0

TIME:84/ 4/11 11:15:12 REV: 850, BIT:0, DP-MODE: 3, 01COM: 3 3 3, REAL-REC:12 Temp-E:11.7 Temp-S: 8.7
VOLTAGE HV-1:148.3, HV-2:146.9, Ref.V:13.4, Cal.V: 0.0 GA,X,Y,Z: 2915.4336 16485.7071 -3503.1680
LAT:-17.6 LON:291.8 ALT:855.7 MLAT: -6.4 L: 1.3 B:16945.2 LT: 6.8 MLT: 6.7 D/N:0.0
PIT1: 78.2 PIT2: 15.5 SPIN: -1.000

SENSOR - 1											SENSOR - 2											
ch	SCA1	SCA2	SCA3	SCL1	SCL2	SCL3	SCL4	SCL5	SCL6	SCL7	ch	SCA1	SCA2	SCA3	SCL1	SCL2	SCL3	SCL4	SCL5	SCL6	SCL7	PITCH1	PITCH2
1	140	122	1588	13019	12137	13060	13	47	0	0	1	0	7	0	2109	271	366	11	122	0	0	0.0	0.0
2	147	138	2	12985	12260	13056	9	47	1	0	2	99	2	79	2455	297	466	23	18	2	0	78.2	15.5
3	156	161	1	12809	12219	12944	16	52	1	1	3	106	5	2	2818	321	504	21	90	3	0	0.0	0.0
4	139	136	1	12782	12242	12887	13	51	0	0	4	464	0	1	3420	342	623	24	106	5	0	0.0	0.0
5	270	269	3	12721	12233	12880	1	29	1	1	5	623	6	1	4004	387	740	21	18	2	0	0.0	0.0
6	311	248	2	12607	12270	12763	16	50	0	0	6	1081	18	3	5007	471	1006	21	114	2	0	78.3	32.1
7	513	405	1	12511	12374	12722	23	71	1	1	7	643	29	8	7411	528	2102	14	56	3	0	0.0	0.0
8	848	738	0	12471	12377	12652	15	51	1	2	8	423	137	9	12129	1120	4584	4	32	3	0	0.0	0.0
9	1104	959	0	12567	12442	12623	22	53	0	0	9	369	281	10	17059	2173	8583	8	45	1	0	0.0	0.0
10	1000	965	1	12258	12386	12448	12	57	3	4	10	250	338	10	19454	4008	12198	14	125	1	0	78.3	50.2
11	572	718	0	12223	12529	12453	12	51	0	0	11	148	312	16	18976	5810	14463	2	0	2	0	0.0	0.0
12	129	259	0	12080	12525	12363	6	47	0	0	12	58	225	12	17466	7501	15666	4	40	0	0	0.0	0.0
13	4	36	0	12061	12568	12323	2	38	0	0	13	6	126	5	15832	9095	15771	11	25	1	0	0.0	0.0
14	1	7	0	12024	12558	12232	8	44	0	0	14	0	65	3	14476	10071	15437	28	87	2	1	78.3	70.1
15	0	2	0	11976	12619	12231	30	42	1	2	15	0	46	3	13406	10834	14910	1	61	1	0	0.0	0.0
16	0	0	0	11704	12624	12037	23	60	0	0	16	0	41	4	12501	11600	14549	21	76	0	0	0.0	0.0

X mark area data are not open.

"EXOS-C" HEP MANUAL

February

1984

Tamagawa University

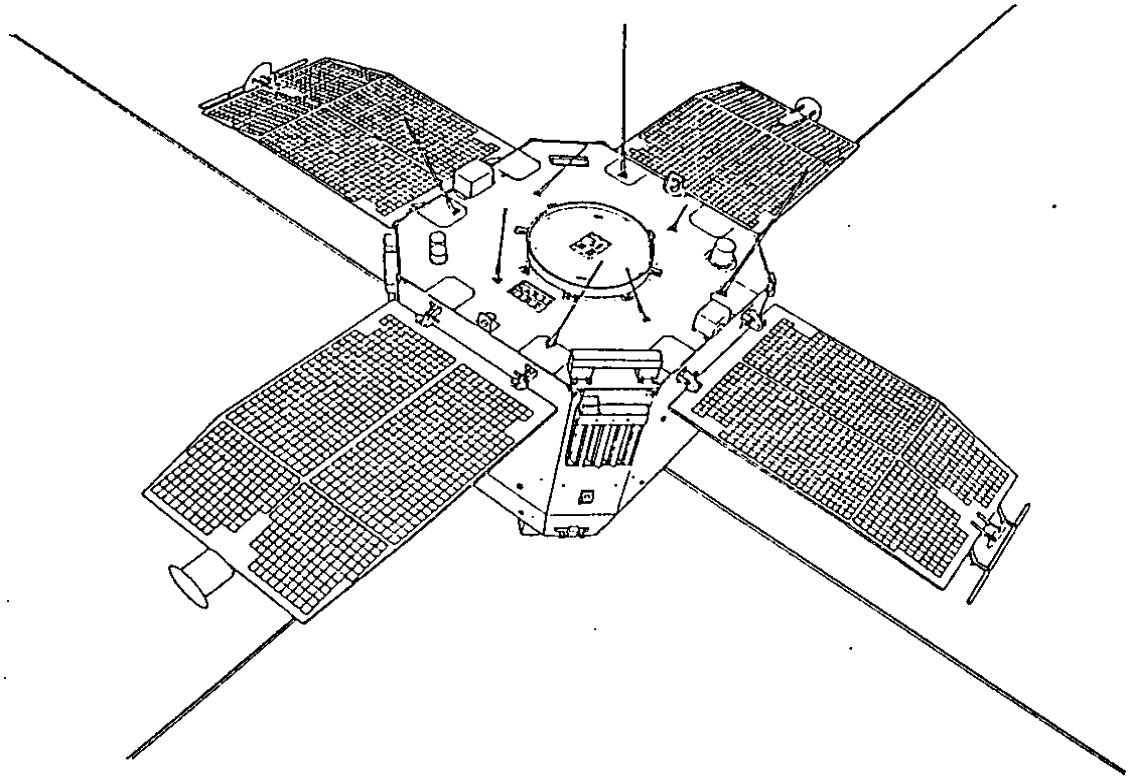

EXOS - C

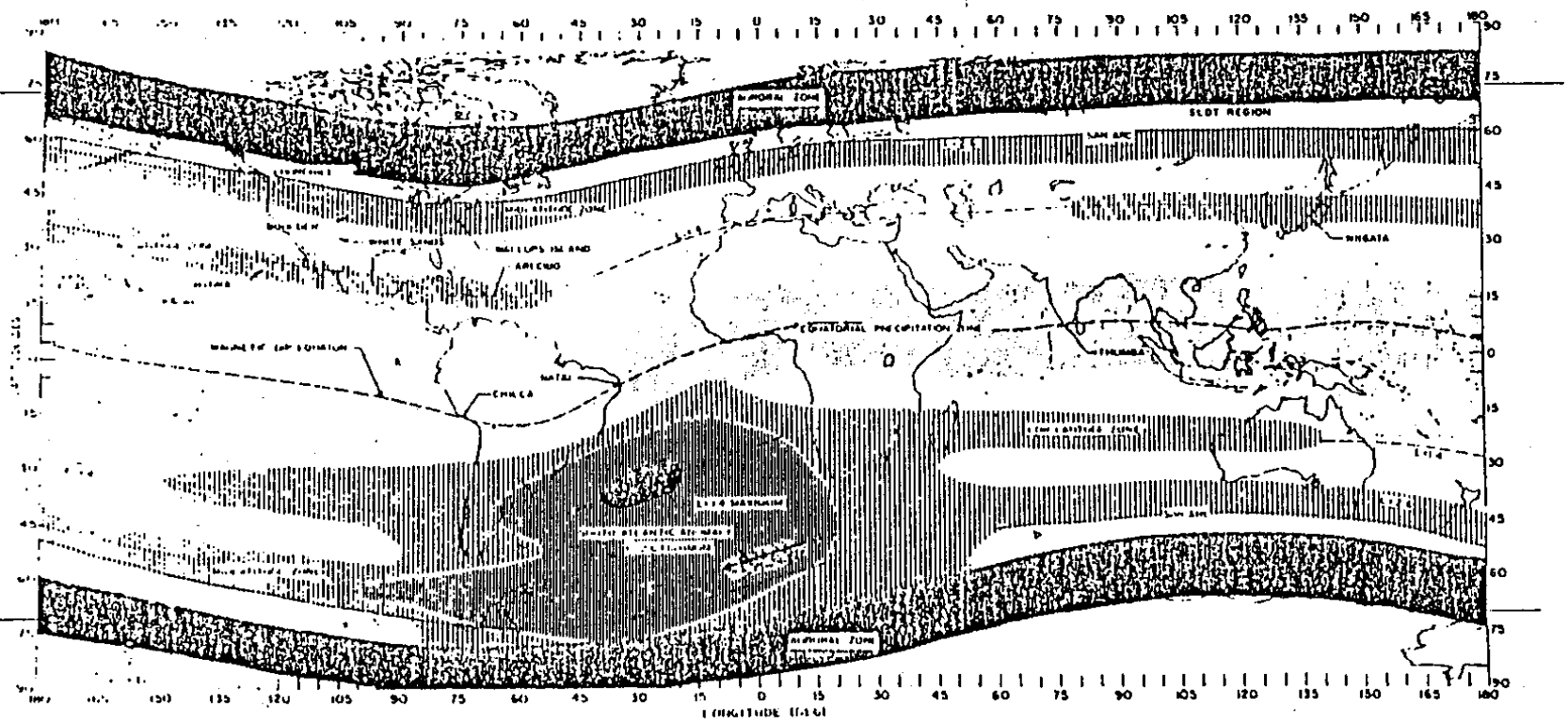
SLOT REGION
NIIGATA
ARECIBO
EQUATORIAL PRECIPITATION ZONE
LONGITUDE (DEG)

SATELLITE "EXOS - C"

Launch date	14 February, 1984
Launch site	Kagoshima Space Center, Uchinoura
Orbit	320 - 1000 km
Inclination	73^{0}
Period	100 min
Purpose	1) Remote sounding of minor constituents in the middle atmosphere. 2) Investigation of the wave-particle interactions in the ionospheric plasma over the Brazilian geomagnetic anomaly and the auroral zone.

INVESTIGATION NAME "EXOS - C"

1) IRA Infrared Atmospheric-Band Airglow Radiometer
2) BUV Backscattered Ultraviolet Spectrometer
3) ALA Aerosol Limb Absorption Spectrometer
4) LAS Infrared Limb Absorption Spectrometer
5) ESP Energy Spectrum of Particles
6) PPS Planetary Plasma Sounder
7) PLR Power Line Radiation
8) HEP High Energy Particles
9) TEL Temperature of Electrons
10) NEI Number Density of Electrons by Impedance Probe
11) MUM Middle and Upper Atmosphere Radar Monitor
12) SCM Solar Cell Monitor

High Energy Particles (HEP)

This experiment monitors the energy spectra and flux of electrons, protons and alpha particles with energies higher than 50 keV using solid-state detectors in the region of the south Atlantic geomagnetic anomaly and in the auroral zone.

HEP team addresses

Principal Investigator	Tadayoshi Doke	Science and Engineering Res. Lab., Waseda University, Kikui-cho 17, Shijuku, Tokyo 162
Co-Investigator	Katsuaki Nagata	Faculty of Engineering, Tamagawa University, Machida, Tokyo 194
	Hiroyuki Murakami	Department of Physics, Rikkyo University, Ikebukuro, Tokyo 171
	Jun Kikuchi	Science and Engineering Res. Lab., Waseda University, Kikui-cho 17, Shinjuku, Tokyo 162
	Atsushi Nakamoto	Department of Physics, Rikkyo University, Ikebukuro, Tokyo 171
	Tsuyoshi Kohno	The Institute of Physical and Chemical Research, Koga, Itabashi, Tokyo 173
	Nobuyuki Hasebe	Faculty of General Education, Ehime University, Matsuyama, Ehime 790

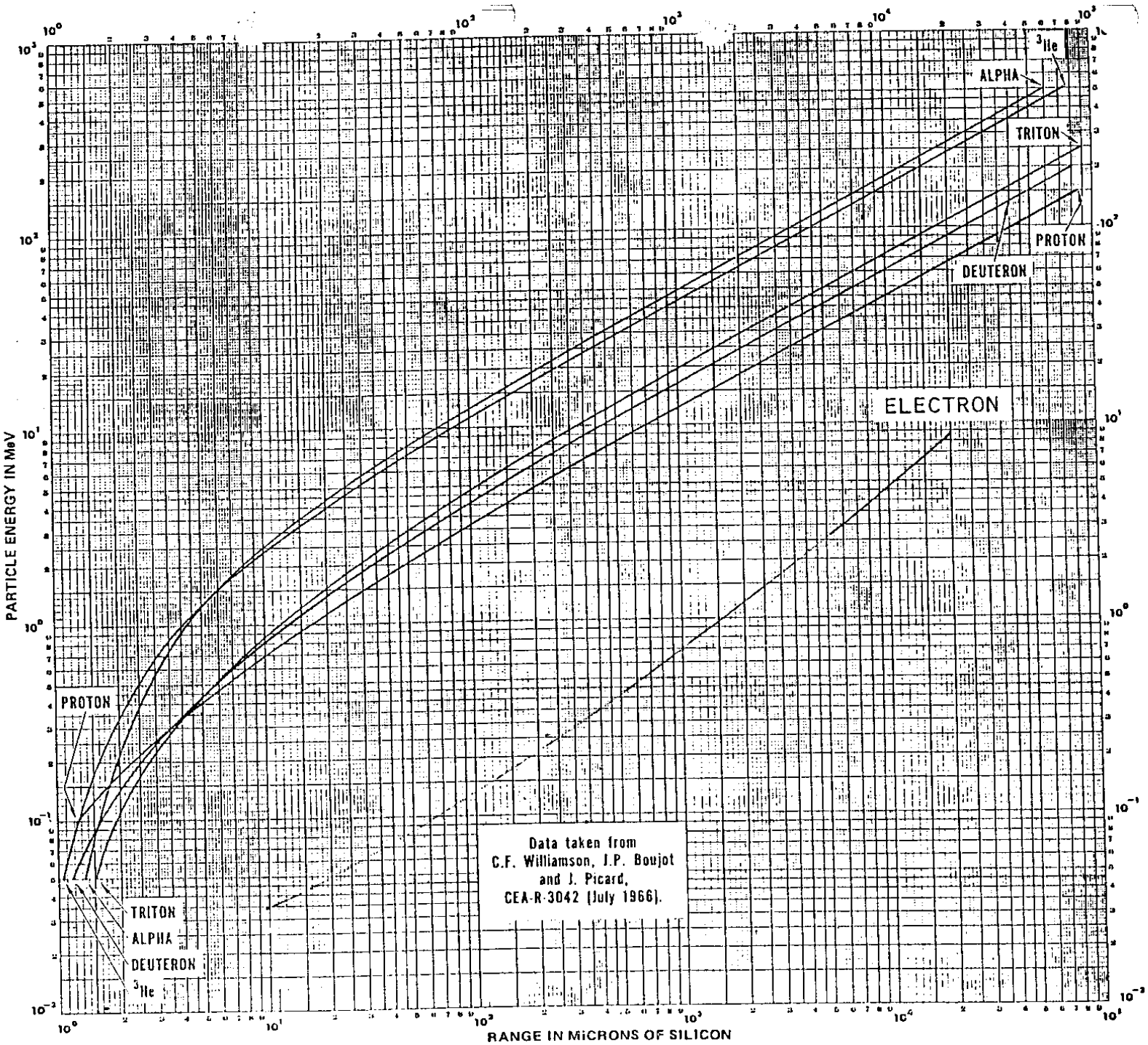

RANGE-ENERGY CURVES

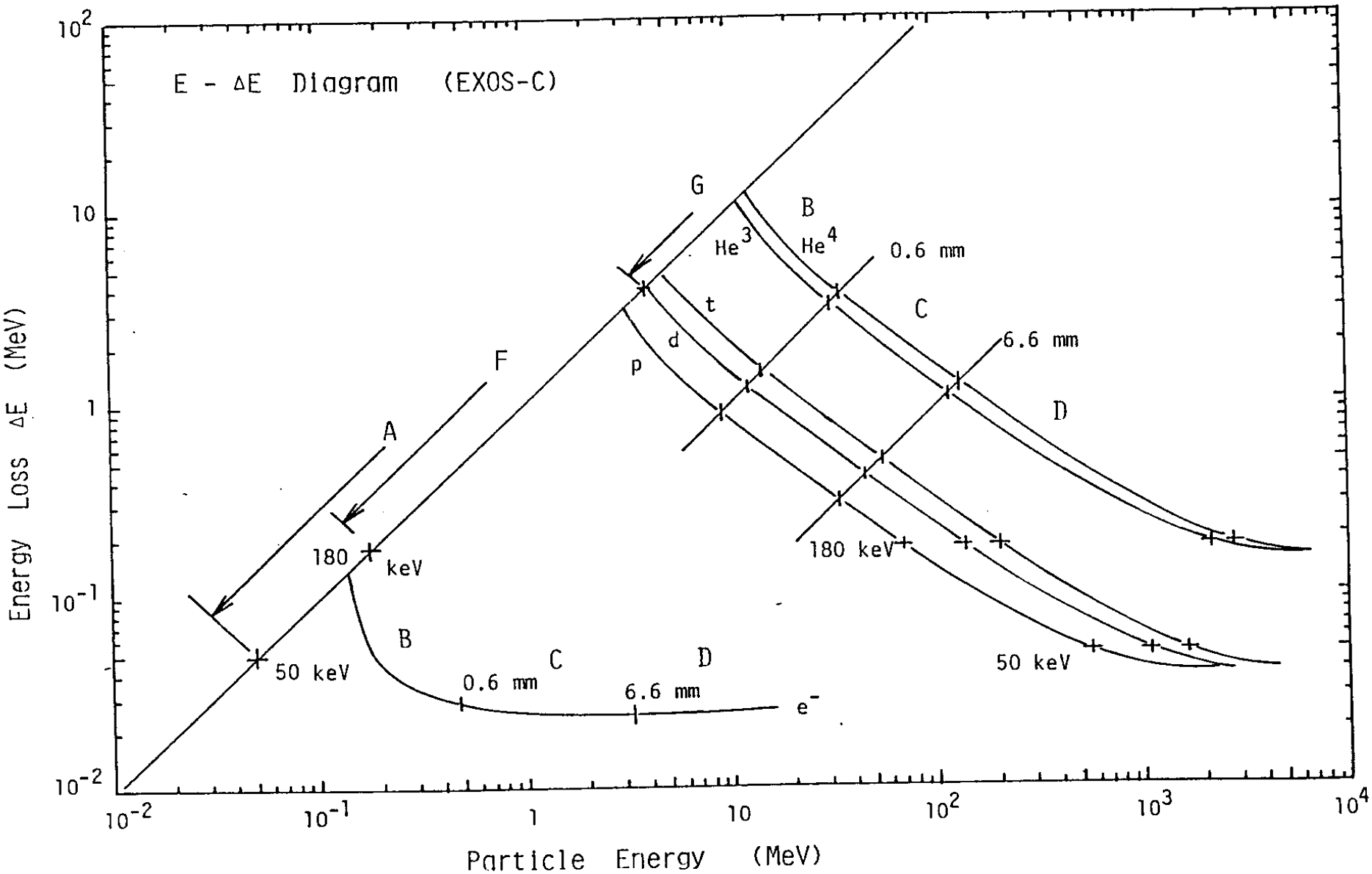
E - ΔE Diagram (EXOS-C)
Energy Loss ΔE (MeV)
Particle Energy (MeV)
10^{2}
10
1
10^{-1}
10^{-2}
10^{-2}
10^{-1}
1
10
10^{2}
10^{3}
10^{4}
A
B
C
D
F
G
p
d
t
He^{3}
He^{4}
e^{-}
0.6 mm
6.6 mm
180 keV
50 keV

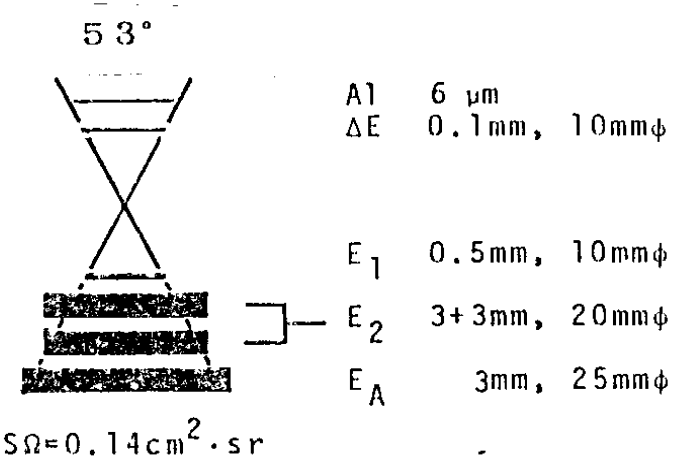

Silicon Detectors of Sensors (EXOS-C HEP)

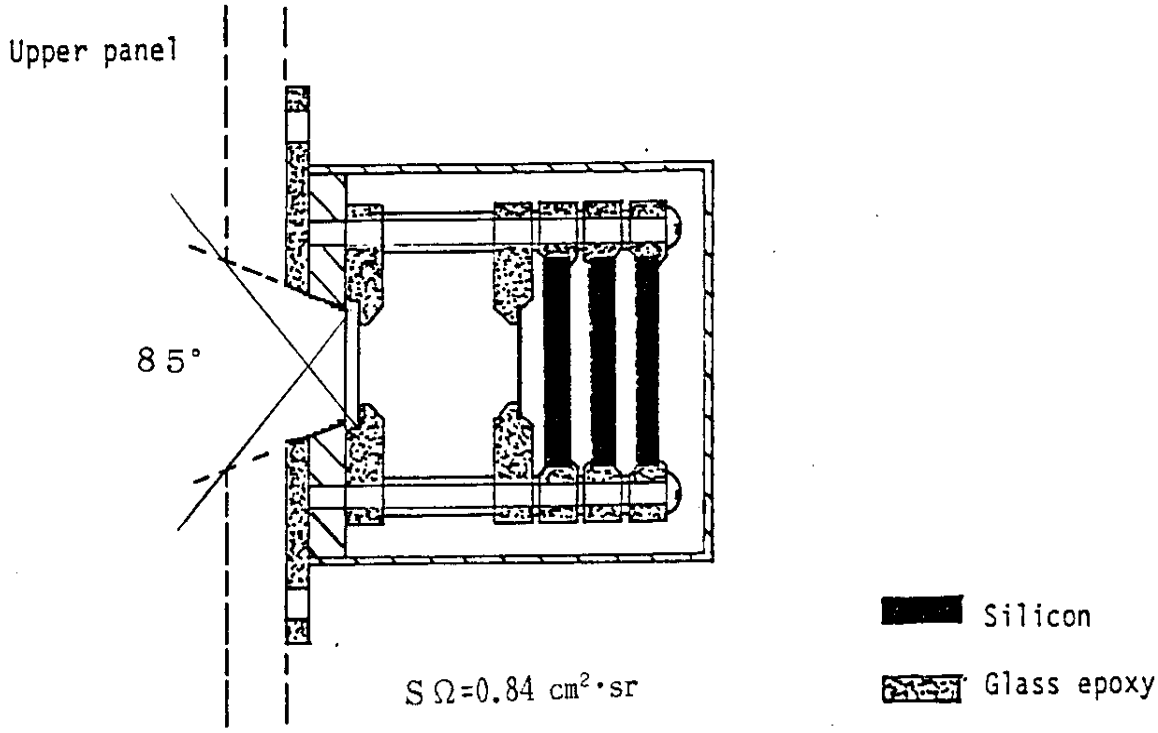

HEP - Sensor 1

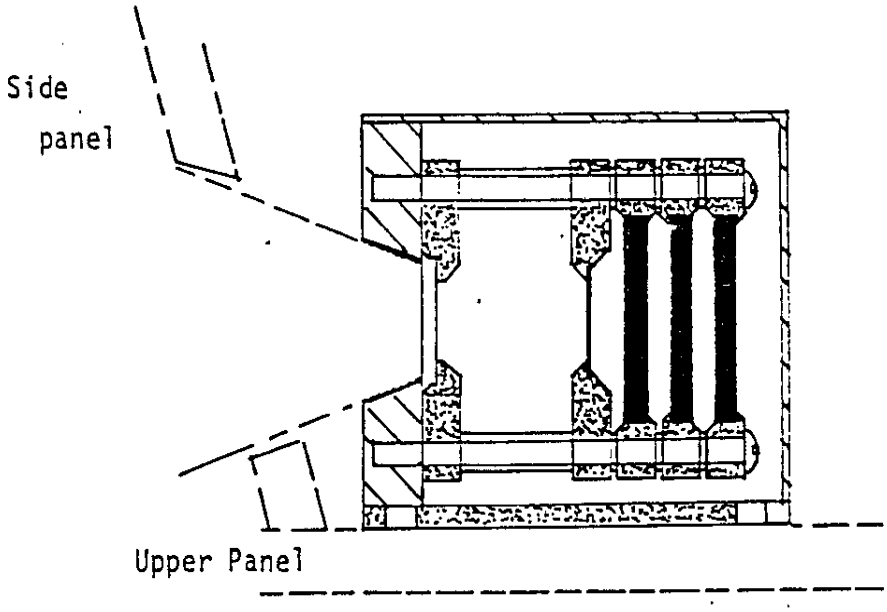

HEP - Sensor 2

Cross-Sectional View of HEP Sensors (EXOS-C)

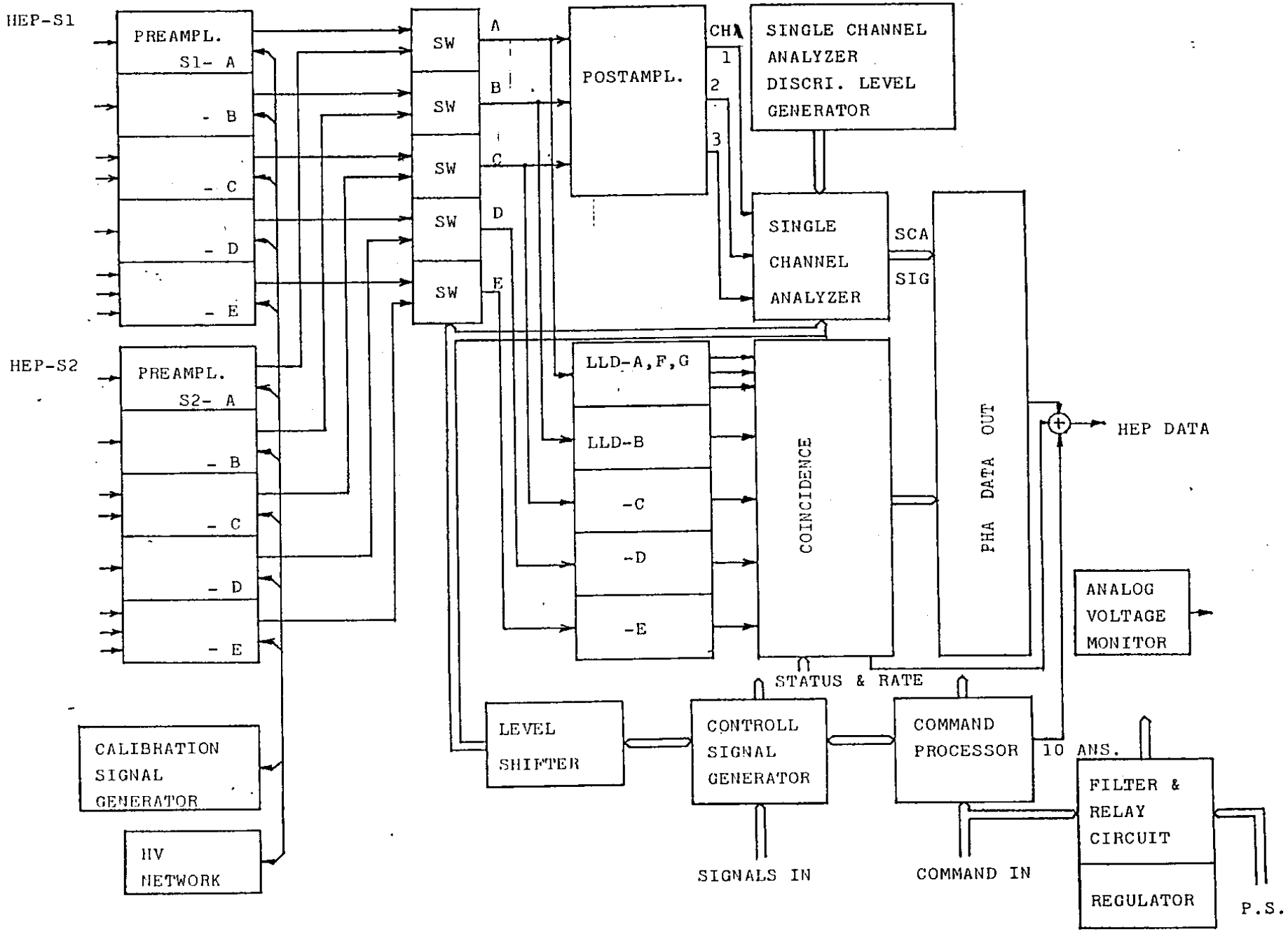

HEP ELECTRONICS SYSTEM BLOCK DIAGRAM (EXOS-C)

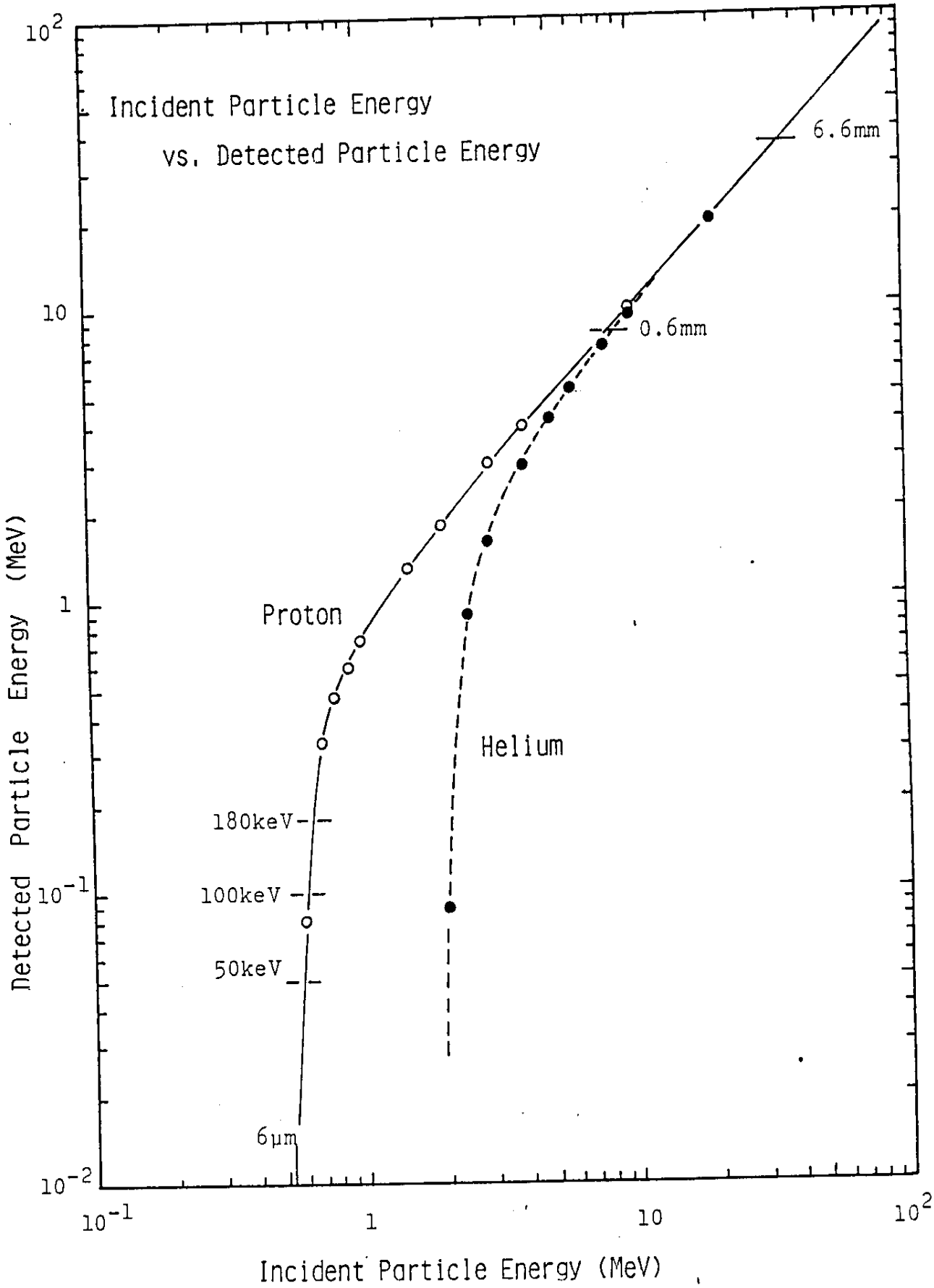
Incident Particle Energy
vs. Detected Particle Energy
6.6mm
0.6mm
Proton
Helium
180keV
100keV
50keV
6μm
Detected Particle Energy (MeV)
Incident Particle Energy (MeV)
10^2
10
1
10^{-1}
10^{-2}
10^{-1}
1
10
10^2

Energy Range (HEP EXOS-C)

Particle	Energy (MeV)
Electron (Proton Helium)	0.05 - 0.18
Electron	0.19 - 3.2
Proton (Helium)	0.64 - 3.3
Proton	3.3 - 35.
Helium	13. - 140.

(July 14,1983)

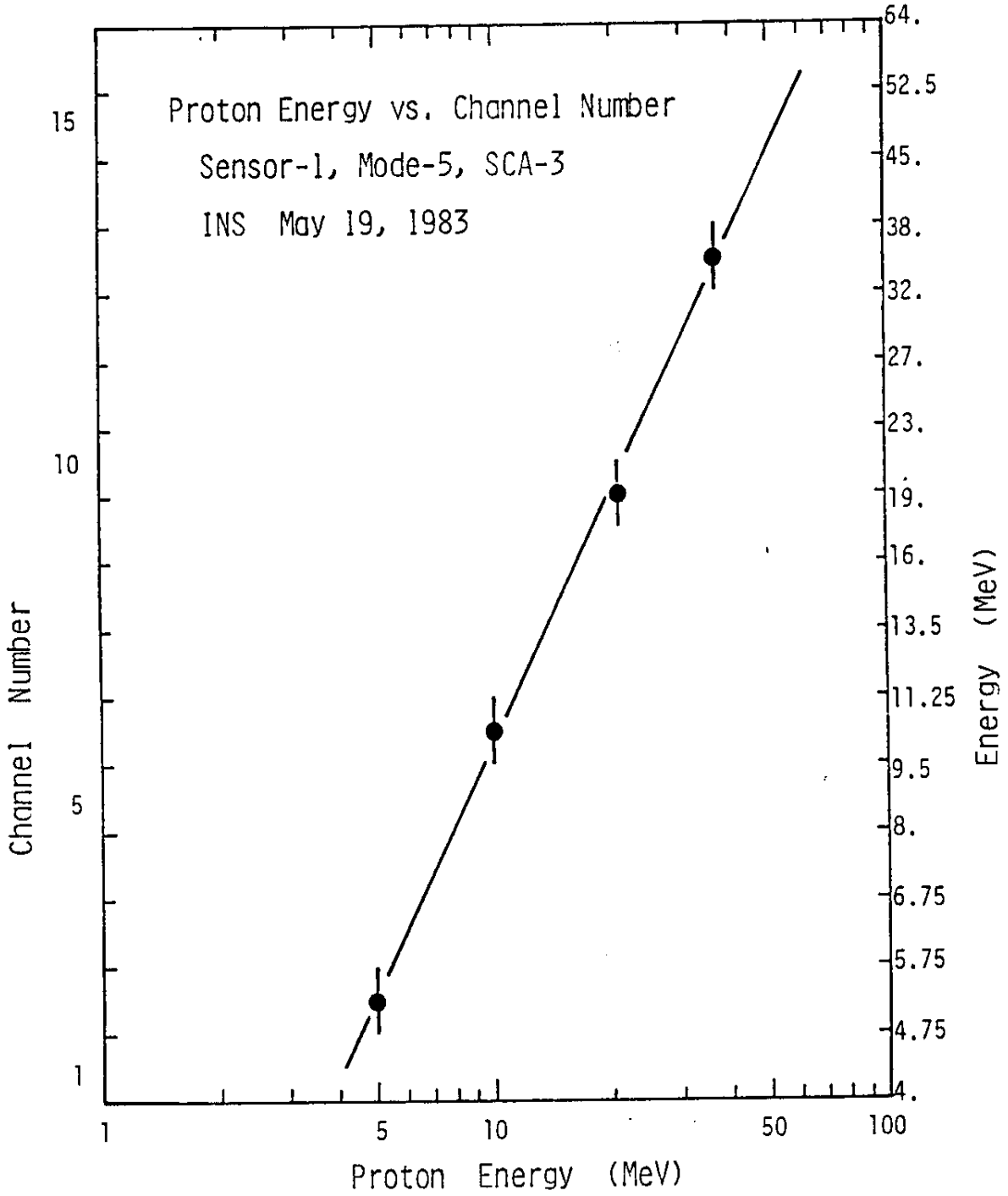
Proton Energy vs. Channel Number
Sensor-1, Mode-5, SCA-3
INS May 19, 1983
Channel Number
15
10
5
1
Proton Energy (MeV)
1
5
10
50
100
Energy (MeV)
64.
52.5
45.
38.
32.
27.
23.
19.
16.
13.5
11.25
9.5
8.
6.75
5.75
4.75
4.

HEP "10" Command (July 14, 1982)

Frame:	F_n
Word:	79 or 63*

B_0	1/0	S1 HV H/L
B_1	1/0	S2 HV H/L
B_2	1/0	Discri. Level H/L
B_3	1/0	PPS ON/OFF
B_4, B_5, B_6, B_7		HEP Block Command Mode (00,01,02,...,F)

*Mode-4

HEP '10' Command (HV, D.L. and PPS)

[Frame: Fn Word: W79 (W63 mode-4) Bit: B0-B3]

	B0123	S1HV *H/L	S2HV *H/L	D.L. **H/L	PPS ON/OFF
0	0000	L	L	L	OFF
1	0001	L	L	L	ON
2	0010	L	L	H	OFF
3	0011	L	L	H	ON
4	0100	L	H	L	OFF
5	0101	L	H	L	ON
6	0110	L	H	H	OFF
7	0111	L	H	H	ON
8	1000	H	L	L	OFF
9	1001	H	L	L	ON
A	1010	H	L	H	OFF
B	1011	H	L	H	ON
C	1100	H	H	L	OFF
D	1101	H	H	L	ON
E	1110	H	H	H	OFF
F	1111	H	H	H	ON

* H/L 300Volt/150Volt

** H/L 100keV/50keV

Discriminator Level (EXOS-C HEP)

Signal		Discriminator Level (keV) Low	High
A	ΔE	50.	100.
B	E_1	50.	100.
C	E_2	50.	100.
D	E_A	50.	100.
E	GR*	50.	100.
F	ΔE	180.	180.
G	ΔE	4000.	4000.

*GR : Guard Ring

ΔE	0.1 mmt	10. mmφ
E_1	0.5 mmt	10. mmφ
E_2	3+3 mmt	20. mmφ
E_A	0.5 mmt	25. mmφ

Detector Signals and Energy Region of Particles (EXOS-C HEP)

Signal	Coincidence	Detector	Energy Region (MeV)			
			ΔE	Electron	Proton	Helium
C1	$A\overline{BCDEF}$	ΔE	0.05/0.10*-0.18	0.05/0.10*-0.18	0.58/0.62*-0.64	1.9/2.0*-2.1
C2	$AB\overline{CDEF}$	E_1	0.05/0.10*-0.18	0.19 - 0.19	----	----
C3	$\overline{A}\overline{BCDE}$	E_1	< 0.05/0.10*	0.19 - 0.47	----	----
C4	$\overline{A}BC\overline{DE}$	E_2	< 0.05/0.10*	0.47 - 3.2	----	----
C5	$\overline{A}BCD\overline{E}$	E_{anti}	< 0.05/0.10*	> 3.2	> 560.	----
C6	$\overline{BCDEF}$	ΔE	> 0.18	----	0.64 - 3.3	2.1 - 13.
C7	$B\overline{CDEF}$	E_1	> 0.18	----	3.3 - 9.2	13. - 37.
C8	$BC\overline{DEF}$	E_2	> 0.18	----	9.2 - 35.	37. - 140.
C9	$BCD\overline{EF}$	E_{anti}	> 0.18	----	35. - 70.	140. - 2800.
C10	$ABCD\overline{E}$	E_{anti}	> 0.05/0.10*	----	35. - 560.	> 140.
C11	$\overline{BCDE}G$	ΔE	> 4.0	----	----	4.8 - 13.
C12	$B\overline{CDE}G$	E_1	> 4.0	----	----	13. - 37.
C13	$ABC\overline{DE}$	E_2	> 0.05/0.10*	----	9.2 - 35.	37. - 140.
C14	$\overline{BCDEFG}$	ΔE	0.18 - 4.0	----	0.64 - 3.3	2.1 - 4.0
C15	$B\overline{CDEFG}$	E_1	0.18 - 4.0	----	3.3 - 9.2	32. - 37.
C16	$BC\overline{DEFG}$	E_2	0.18 - 4.0	----	9.2 - 35.	37. - 140.

*Discriminator level: low 50 keV, high 100 keV

DATA ACQUISITION MODE (EXOS-C HEP)

Mode	SCALER SCL - 6 Helium*	SCL - 7 Helium**	SCL - 5 Proton***
O - F	C11	C12	C5

* He 4.8 - 13. MeV

** He 13. - 37. MeV

*** P >560. MeV

Data Acquisition Mode (EXOS-C HEP)

Mode	10 Command B4567*	PULSE HEIGHT ANALYZER SCA - 1 ΔE	SCA - 2 Electron	SCA - 3 Proton	SCALER SCL - 1 ΔE	SCL - 2 Electron	SCL - 3 Proton	SCL - 4 E_{anti}
0**	0000	C13	C13	C13	C13	C4	C8	C9
1	0001	C6	C1	C6	C6	C1	C7+C8	C9
2	0010	C1+C6	C2+C3+C4	C6+C7+C8	C1+C6	C2+C3+C4	C6+C7+C8	C9
3	0011	C1+C6	C2+C3+C4	C6+C7+C8	C1+C6	C2+C3+C4	C6+C7+C8	C9
4	0100	C1+C6	C4	C8	C1+C6	C4	C8	C9
5	0101	C1+C6	C4	C8	C1+C6	C4	C8	C9
6	0110	C1+C6	C2	C7+C8	C1+C6	C2	C7+C8	C10
7	0111	C1+C6	C2	C7+C8	C1+C6	C2	C7+C8	C10
8**	1000	C13	C13	C13	C13	C4	C8	C9
9	1001	C6	C1	C6	C1+C6	C2+C3+C4	C7+C8	C9
A	1010	C1+C6	C2+C3+C4	C14+C15+C16	C1+C6	C2+C3+C4	C7+C8	C9
B	1011	C1+C6	C2+C3+C4	C14+C15+C16	C1+C6	C2+C3+C4	C7+C8	C9
C	1100	C1+C6	C4	C8	C6	C2+C3+C4	C7+C8	C9
D	1101	C1+C6	C4	C8	C6	C2+C3+C4	C7+C8	C9
E	1110	C1+C6	C2+C3	C15+C16	C1+C6	C2+C3	C7+C8	C10
F	1111	C1+C6	C2+C3	C15+C16	C1+C6	C2+C3	C7+C8	C10

*Frame Fn, Word 79 (or Word 63 OG Mode-4), Bit B4-B7

** Calibration mode

'10' Command vs Energy Region of Scaler (EXOS-C HEP)

'10' Com.	SCL - 1 ΔE	SCL - 2 Electron	SCL - 3 Proton
0, 8	Calibration Mode	Calibration Mode	Calibration Mode
1	180 keV up	100/50-180 keV**	3.3-35 MeV, He 13-140 MeV
2, 3	100/50 keV up*	0.19-3.2 MeV	0.64-35 MeV, He 2.1-140 MeV
4, 5	100/50 keV up	0.47-3.2 MeV	9.2-35 MeV, He 37-140 MeV
6, 7	100/50 keV up	0.19-0.19 MeV	3.3-35 MeV, He 13-140 MeV
9, A, B	100/50 keV up	0.19-3.2 MeV	3.3-35 MeV, He 13-140 MeV
C, D	180 keV up	0.19-3.2 MeV	3.3-35 MeV, He 13-140 MeV
E, F	100/50 keV up	0.19-0.47 MeV	3.3-35 MeV, He 13-140 MeV

*Discriminator level high 100 keV, low 50 keV

**ΔE detector

Calibration Format (EXOS - C HEP)

CAL-V : +3V = 16 MeV

CAL-Level : 32 Frames = 4 sec (High Bit Rate)

CAL-Step : 1 Step = 512 Frames = 64 sec

CAL-Cycle : 4 Steps = 256 sec

DAC LOGIC	STEP (MeV)			
VALUE	I (Preamp.A-C)	II (A-E)	III (A-C)	IV (CAL stop)
Level 01	0.025/0.031*	0.025/0.031	0.100/0.125	-/-
02	0.050/0.063	0.050/0.063	0.200/0.250	-/-
03	0.075/0.094	0.075/0.094	0.300/0.375	-/-
04	0.100/0.125	0.100/0.125	0.400/0.500	-/-
05	0.125/0.156	0.125/0.156	0.500/0:625	-/-
06	0.150/0.188	0.150/0.188	0.600/0.750	-/-
07	0.175/0.219	0.175/0.219	0.700/0.875	-/-
08	0.200/0.250	0.200/0.250	0.800/1.000	-/-
01	0.025/0.031	0.025/0.031	0.100/0.125	-/-
02	0.050/0.063	0.050/0.063	0.200/0.250	-/-
04	0.100/0.125	0.100/0.125	0.400/0.500	-/-
08	0.200/0.250	0.200/0.250	0.800/1.000	-/-
10	0.400/0.500	0.400/0.500	1.600/2.000	-/-
20	0.800/1.000	0.800/1.000	3.200/4.000	-/-
40	1.600/2.000	1.600/2.000	6.400/8.000	-/-
80	3.200/4.000	3.200/4.000	12.80/16.00	-/-

* Mode 0/Mode 8 [Cal-0 mode/Cal-1 mode]

DATA FORMAT of Counting Rate and Status

		Sensor - 1			Sensor - 2		
		Frame	Word	Bit	Frame	Word	Bit
Counting Rate	LLD-A	F32n+1	W77(W61)*	B0-B7	F32n+2	W77(W61)*	B0-B7
	LLD-B	+3			+4		
	LLD-C	+5			+6		
	LLD-D	+7			+8		
	LLD-E	+9			+10		
	C1	+11			+12		
	C2	+13			+14		
	C3	+15			+16		
	C4	+17			+18		
	C6	+19			+20		
	C7	+21			+22		
	C8	+23			+24		
	C9	+25			+26		
	C10	+27			+28		
	C13	+29			+30		
Status	Mode-4/$\overline{\text{Mode-4}}$	+31	W77(W61)*	B0	+32	W77(W61)*	B0
	-12V on/off			B1			B1
	Write Status WRT/EXE			B2			B2
	S1 on/off			B3			B3
	S2 on/off			B4			B4
	Cal/Sig yse/no			B5			B5
	Cal/Step MSB			B6			B6
	Cal/Step LSB			B7			B7

*(W61) Mode-4

Charactristics of Detectors (EXOS-C HEP) SENSOR - 1

	A	B		C	D
	ΔE 0.1 mm	E_1 0.5 mm		E_2 3mmx2	E_A 3 mm
No.	155	355	51	53	54
Bias(V)	30/ 15	100/ 50	300/150	300/150	300/150
Au(Ch.No.)*	193/ -	194/193	163/162	163/163	163/163
Al(Ch.No.)*	- /175	192/113	51/ 50	116/ 71	0/0
Test Pulse (Ch.No.)	219/219	219/ -	191/192	191/191	192/192
T.P. fwhm (Ch.No.)	2/2	1/-	1/1	1/1	1/1

* α ray pulse height

Characteristics of Detectors (EXOS-C HEP) SENSOR - 2

	A	B	C		D
	ΔE 0.1 mm	E_1 0.5 mm	E_2 3 mmx2		E_A 3 mm
No.	52	306	41	42	45
Bias (v)	30/15	100/ 50	300/150	300/150	300/150
Au (Ch.No.)*	625/ -	183/183	- / -	- / -	193/194
Al (Ch.No.)*	625/593	187/138	- / -	- / -	144/117
Test Pulse (Ch.No.)	212/212	212/212	211/212	212/212	- /212
T.P. fwhm (Ch.No.)	1.5/1.5	2/2	1.5/1.5	1.5/1.5	- /3

* α ray pulse height

****** EXOS-C QUICK LOOK SYSTEM (U-1500) ***** (STATUS-1)

HV-S1	: Sensor-1 High Voltage	PRESET1	: High Voltage Preset Sensor 1
HV-S2	: Sensor-2 High Voltage	PRESET2	: High Voltage Preset Sensor 2
DL	: Discriminator Level LO=low, HI=high	O,1COM	: 10 Command B_0-B_7 (Word 79 or 63)
PPS	: PPS Active Signal ON/OFF	STATUS	: Status B_0-B_7 (Word 77 or 61)
CAL-V	: Calibration Voltage		S1: Sensor 1 S2: Sensor 2
C-STEP	: Calibration Step I,II,III,IV	LLD-A	: Counting Number of A Detector
REF-V	: Reference Voltage	LLD-B	: Counting Number of B Detector
TEMP-E	: Electronics Circuit Temperature	LLD-C	: Counting Number of C Detector
TEMP-S	: Sensor (Panel) Temperature	LLD-D	: Counting Number of D Detector
U-ANT	: U-Antenna A or B	LLD-E	: No Signals (Guard Ring)

```
      ****  EXOS-C OL SYSTEM  **** (STATUS-1)  UT = 83.09.09  17.45.13
SA = 15   REV = 09093   FI =  51   MODE =  1  BIT = 8192  OG = FFFF  LOG = 15792
            ------- IRA -------        -- BUV --    --- ALA ---     ---- LAS ----
IRA  OF  HV       OF      FORK-P  NO  MODE   CAL  CAL        OF  EMRG
BUV  OF  CAL      OF            T  NO  SHUTT  CLS  GAIN        L  CHOP1 OF   GAIN
ALA  OF  BIAS      0.0V   GAIN-P   0  HV-PRS  OF  CH-1           CHOP2 OF   SF    OF
LAS  OF  MIRROR - 0(S)        T   0  HV       OF  CH-2           CHOP3 OF   BOS   OF
         CL-MON    0.0V   SG.L-P   0  CHV-PRS OF  TEMP1    89.1  CHOP1 I      0 (MA)
         TEMP-P    0.0C         T   0  CHV     OF  TEMP2    89.1  CHOP2 I      0 (MA)
              T    0.0C   NOIS-P   0  HV-CON    0                CHOP3 I      0 (MA)
              F   89.1C   REFER  THR  HV-MON    0                SF-X    0 CTM  89.1
         DISCRI    9. 1   DELAY1   0  TEMP-L    0                SF-Y    0 STM  89.1
         PHASE     STOP         2   0  FLM-NO    0                BOS     0
            ----------- ESP -----------          --------- HEP ---------
ESP  OF  01-ANS     00                  DATA  HV-S1 104 L  PRESET1 1
HEP  ON  PRESET 00000   LE-HV 0: 0.0     00   HV-S2 102 L  PRESET2 1
         HV      000    HE-HV 0: 0.0     00   DL      LO   0,1COM  00001011(0B)
         SV        00   HI-HV 0: 0.0     00   PPS     NO   STATUS  01001000
         CAL       OF   LE-SV        0   00   CAL-V    0.0          S1    S2
         MODE     A.A     HI      1.3   00   C-STEP     0  LLD-A   149     6
         DISCRI 0.0.0     LO     0.04   00   REF-V   12.0  LLD-B     1     1
         BIAS   0:  0   HEI-SV        0   00   TEMP-E  24.7  LLD-C   166     0
         RETARD   8.0     HI        0        TEMP-S  52.4  LLD-D   203    87
         CEM-E    0.0     LO     0.00        U-ANT      A  LLD-E     0     0
```

```
                +++  EXOS - C  HEP  ENERGY  DISTRIBUTION +++    1984 DATE=830309 HHMMSS(UT)=114828 REV=3091     ***EXOS-C HEP***
S1HV=L  S2HV=L  D.L.=L  PPS=OFF  MODE=13 D=DE(50KEV UP), E=0.19-3.2MEV. P=0.64-37MEV
                        SENSOR-1..      PARTICLES/SEC.ST.CM2.MEV                                PARTICLES/SEC.ST.CM2.MEV     ..SENSOR-2
                        1        10       10**2     10**3     10**4     10**5   1        10       10**2     10**3     10**4     10**5
      ENERGY (MEV)     +I------.--I------.--I------.--I------.--I------.--I+  +I------.--I------.--I------.--I------.--I------.--I+
   0.000 -   0.050     IDDDDDDDDDDDDDDDDDDDDDDDDDDDDDDD                     I  I                                                      I
   0.050 -   0.100     IDDDDDDDDDDDDDDDDDDDDDDDDDDDDDDDDDDDDDDD             I  I                                                      I
   0.100 -   0.150     IDDDDDDDDDDDDDDDDDDDDDDDDDDDDDDDDDDDDDD              I  I                                                      I
   0.150 -   0.200     IDDDDDDDDDDDDDDDDDDDDDDDDDDDDDDDDDDD                 I  I                                                      I
   0.200 -   0.250     +DDDDDDDDDDDDDDDDDDDDDDDDDDDDDDDD                    +  +                                                      +
   0.250 -   0.300     IDDDDDDDDDDDDDDDDDDDDDDDDDDD                        I  I                                                      I
   0.300 -   0.350     IDDDDDDDDDDDDDDDDDDD                                I  I                                                      I
   0.350 -   0.400     IDDDDDDDDDDDDD                                      I  I                                                      I
   0.400 -   0.600     IDDDDDDDDDDD                                        I  I                                                      I
   0.600 -   0.800     +                                                   +  +                                                      +
   0.800 -   1.000     I                                                   I  I                                                      I
   1.000 -   1.200     I                                                   I  I                                                      I
   1.200 -   1.400     I                                                   I  I                                                      I
   1.400 -   1.600     I                                                   I  I                                                      I
   1.600 -   1.800     +                                                   +  +                                                      +
   1.800 -   2.000     I                                                   I  I                                                      I
                       +I------.--I------.--I------.--I------.--I------.--I+  +I------.--I------.--I------.--I------.--I------.--I+
      ENERGY (MEV)     +I------.--I------.--I------.--I------.--I------.--I+  +I------.--I------.--I------.--I------.--I------.--I+
   0.150 -   0.400     IEEEEEEEEEEEEEEEEEEEEEEEEE                           I  I                                                      I
   0.400 -   0.575     IEEEEEEEEEEEEEEEEEEEEEEEEEEE                         I  I                                                      I
   0.575 -   0.675     IEEEEEEEEEEEEEEEEEEEEEEEEEE                          I  I                                                      I
   0.675 -   0.800     IEEEEEEEEEEEEEEEEEEEEEEEEEEEE                        I  I                                                      I
   0.800 -   0.950     +EEEEEEEEEEEEEEEEEEEEEEEEE                           +  +                                                      +
   0.950 -   1.125     IEEEEEEEEEEEEEEEEEEEEEEE                             I  I                                                      I
   1.125 -   1.350     IEEEEEEEEEEEEEEEEEEEEE                               I  I                                                      I
   1.350 -   1.600     IEEEEEEEEEEEEEEEEEEEEEEE                             I  I                                                      I
   1.600 -   1.900     IEEEEEEEEEEEEEEEEEEEE                                I  I                                                      I
   1.900 -   2.300     +EEEEEEEEEE                                         +  +                                                      +
   2.300 -   2.700     I                                                   I  I                                                      I
   2.700 -   3.200     I                                                   I  I                                                      I
   3.200 -   3.800     I                                                   I  I                                                      I
   3.800 -   4.500     I                                                   I  I                                                      I
   4.500 -   5.250     +                                                   +  +                                                      +
   5.250 -   6.400     I                                                   I  I                                                      I
                       +I------.--I------.--I------.--I------.--I------.--I+  +I------.--I------.--I------.--I------.--I------.--I+
      ENERGY (MEV)     +I------.--I------.--I------.--I------.--I------.--I+  +I------.--I------.--I------.--I------.--I------.--I+
   2.900 -   3.400     I                                                   I  I                                                      I
   3.400 -   4.000     I                                                   I  I                                                      I
   4.000 -   4.750     I                                                   I  I                                                      I
   4.750 -   5.750     I                                                   I  I                                                      I
   5.750 -   6.750     +                                                   +  +                                                      +
   6.750 -   8.000     I                                                   I  I                                                      I
   8.000 -   9.500     I                                                   I  I                                                      I
   9.500 -  11.250     I                                                   I  I                                                      I
  11.250 -  13.500     I                                                   I  I                                                      I
  13.500 -  16.000     +                                                   +  +                                                      +
  16.000 -  19.000     I                                                   I  I                                                      I
  19.000 -  23.000     I                                                   I  I                                                      I
  23.000 -  27.000     I                                                   I  I                                                      I
  27.000 -  32.000     I                                                   I  I                                                      I
  32.000 -  38.000     +                                                   +  +                                                      +
  38.000 -  45.000     I                                                   I  I                                                      I
                       +I------.--I------.--I------.--I------.--I------.--I+  +I------.--I------.--I------.--I------.--I------.--I+
```

SENSOR-1.. *** COUNTING RATE (COUNTS/) *** D=DE-DETECTOR, E=ELECTRON, P=PROTON, ..SENSOR-2 ***EXOS-C HEP***
S1HV=L S2HV=L D.L.=H PPS=OFF MODE= 5 D=DE(100KEV UP), E=0.76-3.2MEV, P=13-37MEV(HE=51-150MEV)

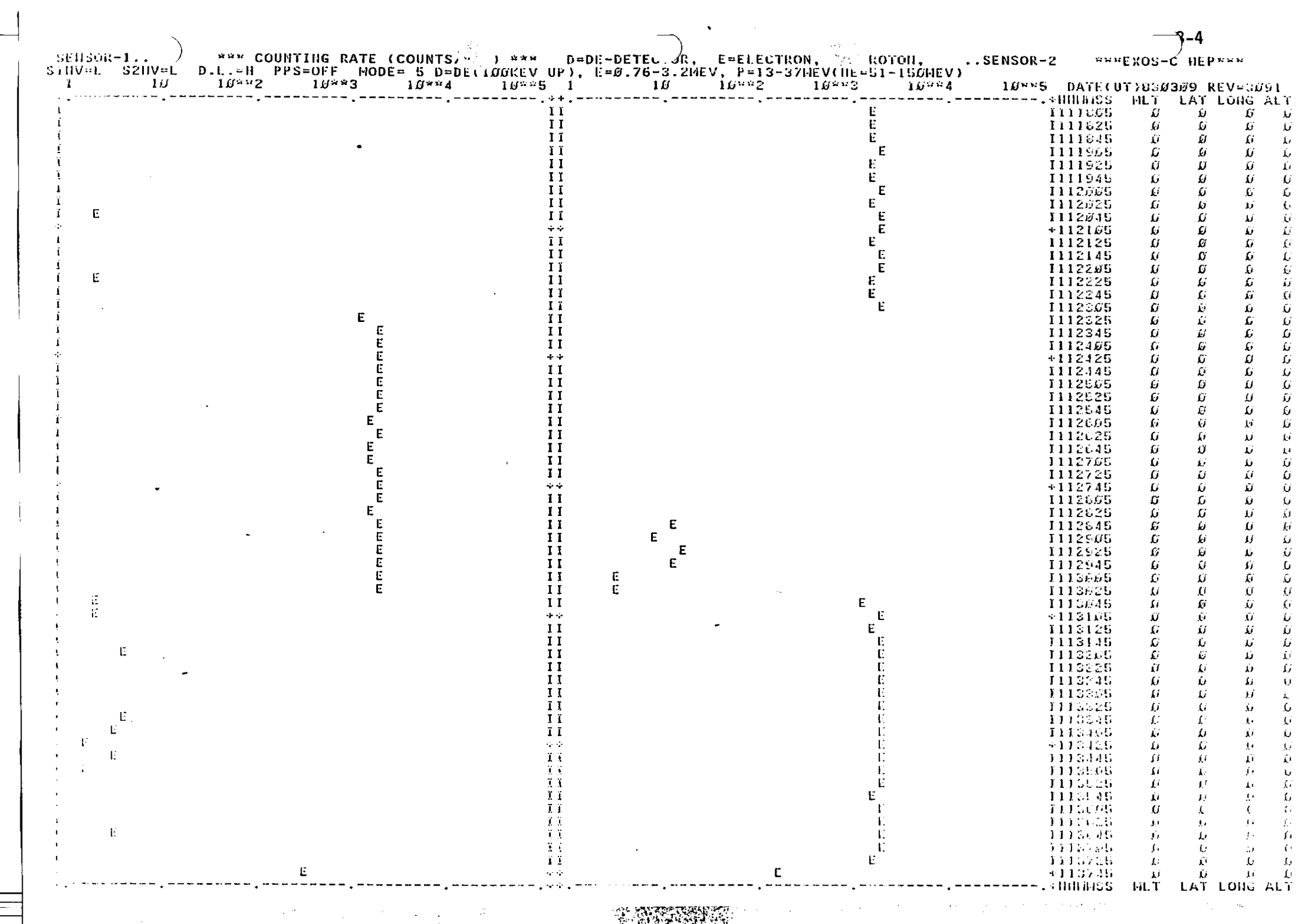

EXOS-C

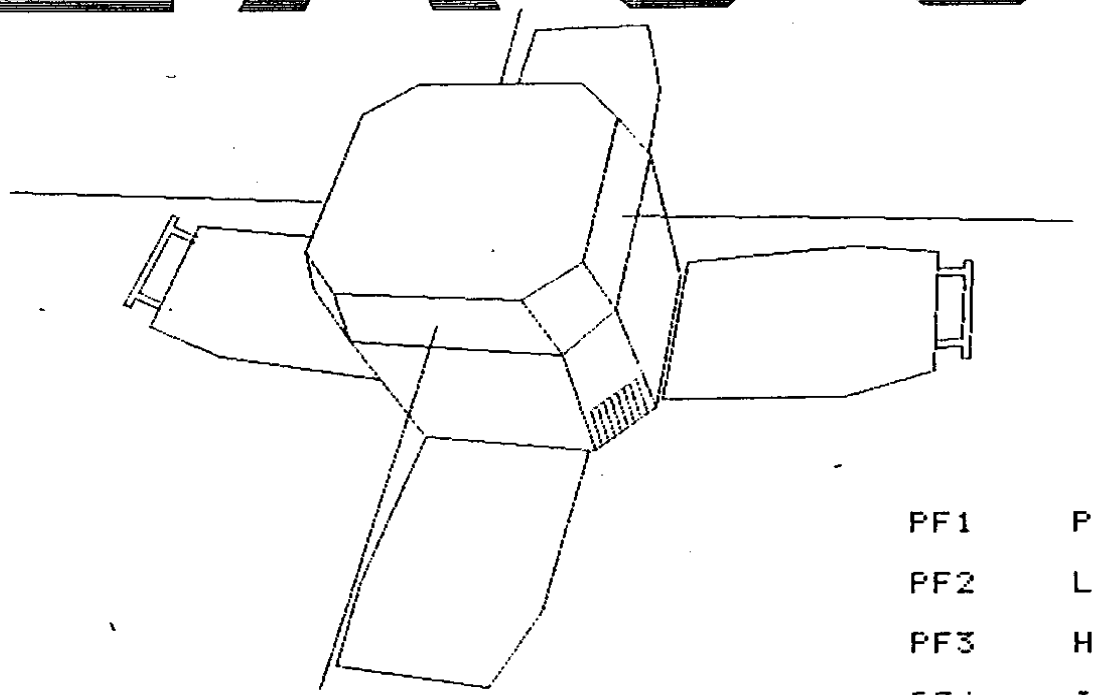

PF1	PPS/NEI
PF2	LAS
PF3	HEP
PF4	IRA
PF15	CLEAR
PF16	H-COPY

EXOS-C QL --- HEP --- REV=11211 UT= 83.11.21 15.20.01

MODE= 4 BIT-RATE=8192 OG=7033 FI=255

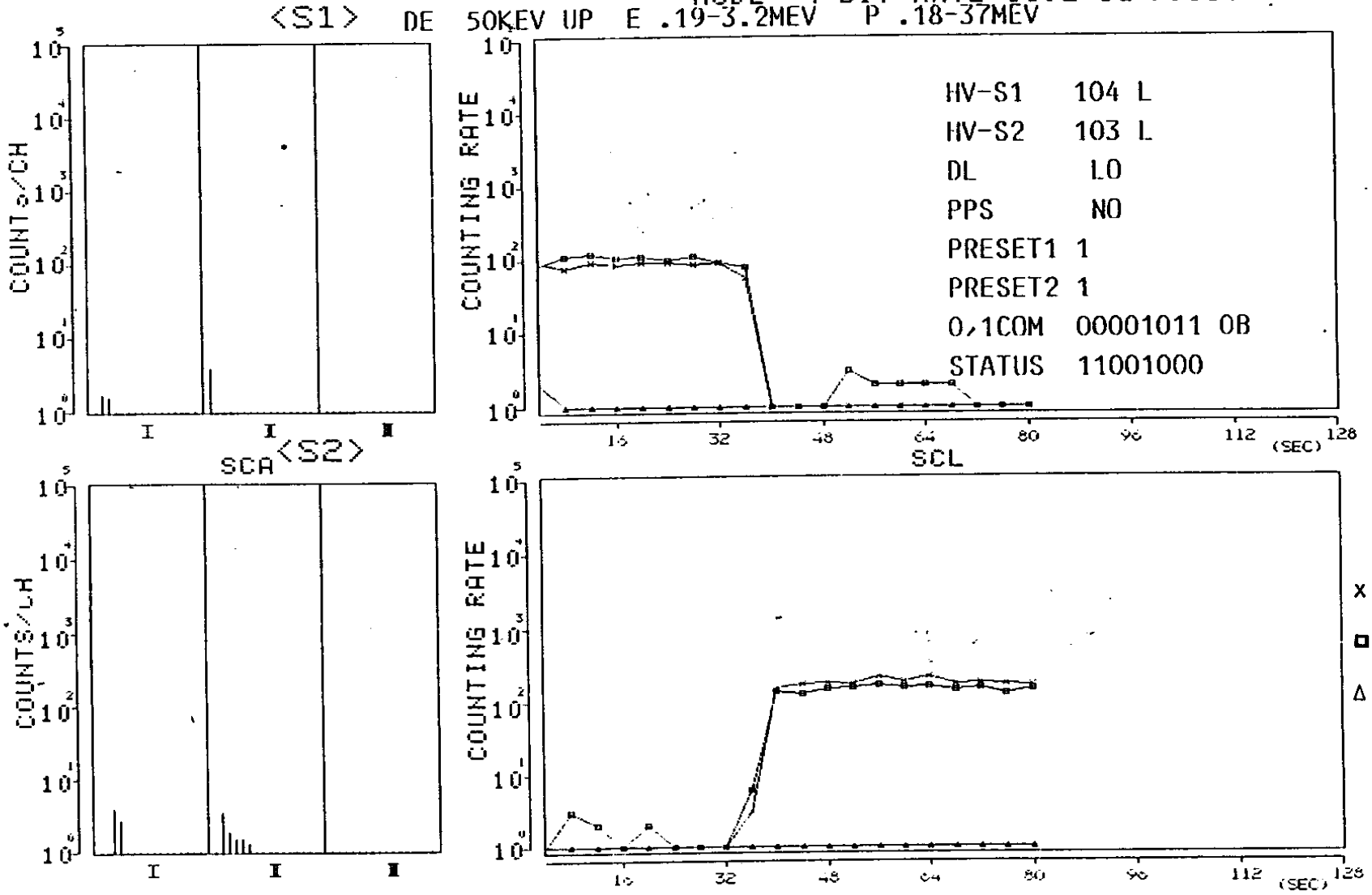

座標系の定義

$\mathbb{h}$ ：ホイールの持つ角運動量
$\mathbb{M}$ ：MAC⊕時の磁気モーメント
$\mathbb{m}$ ：MULD⊖時の磁気モーメント
IA ：GYR入力軸

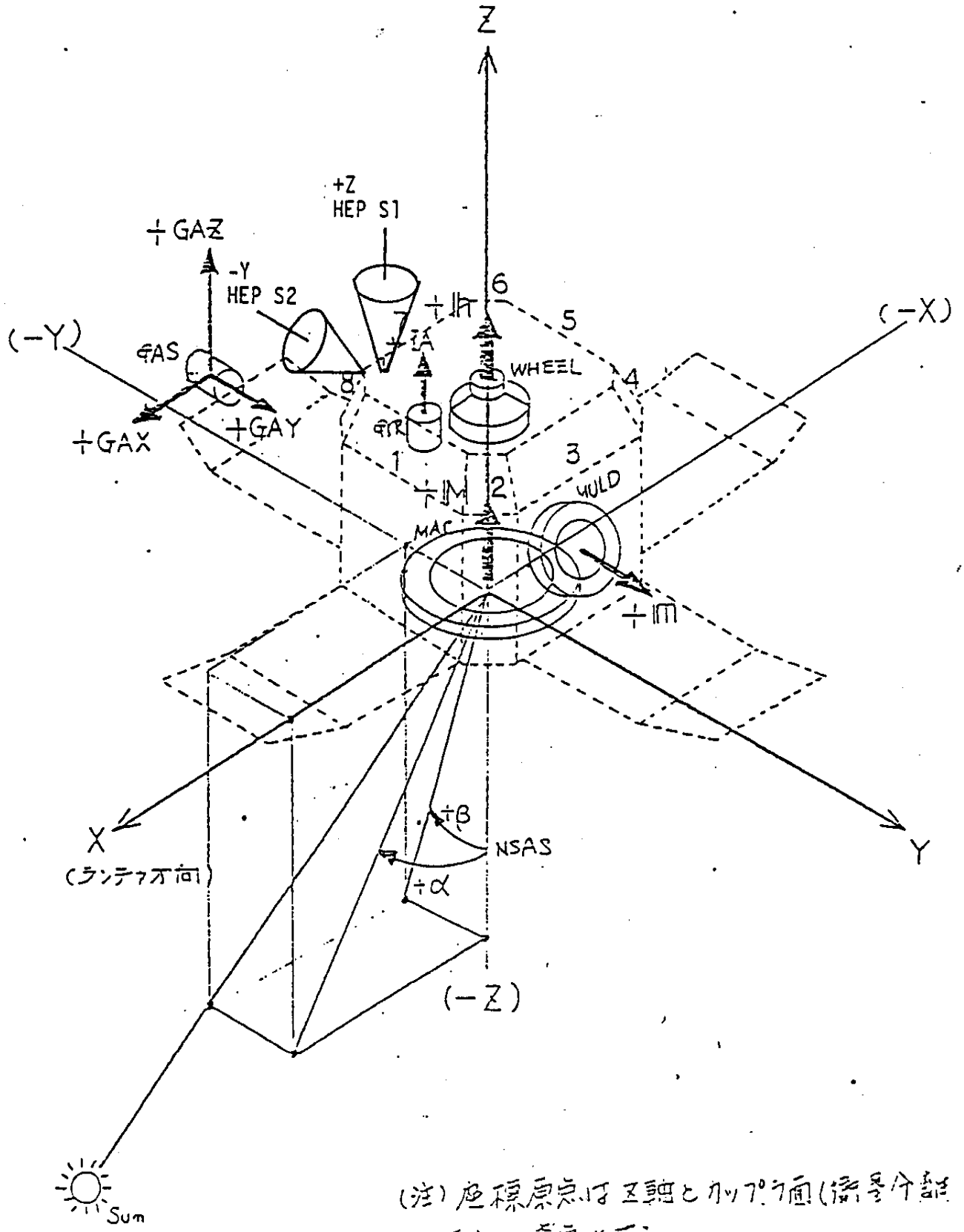

(注) 座標原点は Z軸とカップラ面(衛星分離面)との交点とする。

EXOS-C (OHZORA)
High Energy Particle (HEP)

Magnetic Tape Contents

Tamagawa University

TAPE LABEL

VOLUME SUMMARY OF EXOS-C HEP EDITED DATA SET #### DATE. 88-09-28 TIME: 17:20:40 PAGE : 1

DD NAME : //GO.FT01F001 DD DSN=HEPAB,DISP=OLD,UNIT=MT,
// VOL=SER=HEP001,LABEL=(1,SL,,IN)

REC NO.	REV	STATION	MODE	START TIME	END TIME	MM:SS	BIT-L	BIT-H	READ	MM:SS	T-SEQ
1 - 176	7322	ESR-REPR	3	85/ 6/19 0:21:58	- 85/ 6/19 1: 8:33	46:51	176	0	176	46:56	
177 - 304	7323	ESR-REPR	3	85/ 6/19 2: 0: 6	- 85/ 6/19 2:33:53	34: 3	128	0	128	34: 8	
305 - 352	7325	ESR-REPR	3	85/ 6/19 2:34:13	- 85/ 6/19 2:46:41	12:44	48	0	48	12:48	
353 - 476	7327	ESR-REPR	3	85/ 6/19 5:46:11	- 85/ 6/19 7: 4:18	78:23	4	120	124	9: 4	
477 - 485	7328	ESR-REPR	3	85/ 6/19 7:58:38	- 85/ 6/19 7:59:50	1:28	2	7	9	1: 0	
486 - 543	7328	KSC-REPR	3	85/ 6/19 7:59:53	- 85/ 6/19 8: 3:41	3:52	0	58	58	3:52	
544 - 703	7329	KSC-REPR	3	85/ 6/19 9:29: 7	- 85/ 6/19 9:39:41	10:38	2	158	160	11: 4	
704 - 863	7330	KSC-REPR	3	85/ 6/19 11: 5: 7	- 85/ 6/19 11:15:41	10:38	1	159	160	10:52	
864 - 1055	7331	KSC-REPR	3	85/ 6/19 12:41: 7	- 85/ 6/19 12:53:49	12:46	1	191	192	13: 0	
1056 - 1180	7336	ESR-REPR	3	85/ 6/19 22:46:30	- 85/ 6/19 23:33: 6	46:52	125	0	125	33:20	
1181 - 1356	7337	ESR-REPR	3	85/ 6/20 0:24:38	- 85/ 6/20 1:11:14	46:52	176	0	176	46:56	
1357 - 1375	7338	ESR-REPR	3	85/ 6/20 2: 2:47	- 85/ 6/20 2: 7:30	4:59	19	0	19	5: 4	
1376 - 1484	7339	ESR-REPR	3	85/ 6/20 2: 7:47	- 85/ 6/20 2:36:34	29: 3	109	0	109	29: 4	
1485 - 1484	7340	???-????999		85/ 6/20 2:36:54	- 85/ 6/20 2:36:54	0:16	1	0	1	0:16	
1486 - 1614	7342	ESR-REPR	3	85/ 6/20 5:48:51	- 85/ 6/20 7: 7:50	79: 3	2	127	129	9: 0	
1615 - 1774	7345	ESR-REPR	3	85/ 6/20 11: 8:51	- 85/ 6/20 11:19:25	10:38	1	159	160	10:52	
1775 - 1966	7346	ESR-REPR	3	85/ 6/20 12:44:50	- 85/ 6/20 12:57:33	12:47	1	191	192	13: 0	
1967 - 2094	7351	ESR-REPR	3	85/ 6/20 22:53:26	- 85/ 6/20 23:27:14	34: 4	128	0	128	34: 8	
2095 - 2143	7352	ESR-REPR	3	85/ 6/20 23:27:35	- 85/ 6/21 0:31:36	64:17	49	0	49	13: 4	
2144 - 2299	7353	ESR-REPR	3	85/ 6/21 1: 5:42	- 85/ 6/21 2:42:26	97: 0	156	0	156	41:36	
2300 - 2351	7354	ESR-REPR	3	85/ 6/21 2:42:45	- 85/ 6/21 2:56:18	13:49	52	0	52	13:52	
2352 - 2513	7356	ESR-REPR	3	85/ 6/21 6: 6:28	- 85/ 6/21 6:21:50	15:26	4	158	162	11:36	
2514 - 2523	7358	ESR-REPR	3	85/ 6/21 8: 4:43	- 85/ 6/21 8: 5:56	1:29	2	8	10	1: 4	
2524 - 2550	7358	KSC-REPR	3	85/ 6/21 8: 5:58	- 85/ 6/21 8: 7:42	1:48	0	27	27	1:48	
2551 - 2581	7358	ESR-REPR	3	85/ 6/21 8: 7:46	- 85/ 6/21 8: 9:46	2: 4	0	31	31	2: 4	
2582 - 2741	7359	KSC-REPR	3	85/ 6/21 9:35:11	- 85/ 6/21 9:45:46	10:39	2	158	160	11: 4	
2742 - 2901	7360	KSC-REPR	3	85/ 6/21 11:11:12	- 85/ 6/21 11:21:46	10:38	1	159	160	10:52	
2902 - 2940	7361	KSC-REPR	3	85/ 6/21 12:45: 3	- 85/ 6/21 12:47:34	2:35	1	38	39	2:48	
2941 - 3093	7361	ESR-REPR	3	85/ 6/21 12:47:38	- 85/ 6/21 12:57:46	10:12	0	153	153	10:12	
3094 - 3269	7366	ESR-REPR	3	85/ 6/21 22:56: 6	- 85/ 6/21 23:42:42	46:52	176	0	176	46:56	
3270 - 3445	7367	ESR-REPR	3	85/ 6/22 0:34:16	- 85/ 6/22 1:20:50	46:50	176	0	176	46:56	
3446 - 3591	7368	ESR-REPR	3	85/ 6/22 2:20:18	- 85/ 6/22 2:58:58	38:56	146	0	146	38:56	
3592 - 3969	7370	ESR-REPR	3	85/ 6/22 6: 9: 7	- 85/ 6/22 6:34:14	25:11	1	377	378	25:24	
3970 - 3999	7371	ESR-REPR	3	85/ 6/22 6:34:19	- 85/ 6/22 6:36:14	1:59	1	29	30	2:12	
4000 - 4008	7373	KSC-REPR	3	85/ 6/22 8: 9: 9	- 85/ 6/22 8:10:27	1:34	2	7	9	1: 0	
4009 - 4065	7373	ESR-REPR	3	85/ 6/22 8:10:28	- 85/ 6/22 8:14:12	3:48	0	57	57	3:48	
4066 - 4225	7374	ESR-REPR	3	85/ 6/22 9:39:37	- 85/ 6/22 9:50:12	10:39	1	159	160	10:52	
4226 - 4385	7375	ESR-REPR	3	85/ 6/22 11:15:38	- 85/ 6/22 11:26:12	10:38	1	159	160	10:52	
4386 - 4494	7376	ESR-REPR	3	85/ 6/22 12:49:30	- 85/ 6/22 13: 1:37	12:23	4	105	109	8: 4	
4495 - 4503	7376	KSC-REPR	3	85/ 6/22 13: 1:40	- 85/ 6/22 13: 2:12	0:36	0	9	9	0:36	
4504 - 4503	7417	ESR-REAL	999	85/ 6/25 7:30:16	- 85/ 6/25 7:30:16	0: 4	0	1	1	0: 4	
4505 - 4593	7431	ESR-REAL	3	85/ 6/26 5:54:44	- 85/ 6/26 6: 3:10	8:30	3	86	89	6:32	
4594 - 4739	7432	ESR-REAL	3	85/ 6/26 7:33:13	- 85/ 6/26 7:42:50	9:41	2	144	146	10: 8	
4740 - 4739	7481	ESR-REPR	999	85/ 6/29 13:10:37	- 85/ 6/29 13:10:37	0: 4	0	1	1	0: 4	
4741 - 4799	7482	KSC-REPR	3	85/ 6/29 14:13:22	- 85/ 6/29 14:17:13	3:55	1	58	59	4: 8	

VOLUME SUMMARY OF EXOS-C HEP EDITED DATA SET #### DATE: 88-09-28 TIME: 17:20:40

DD NAME : //GO.FT01F001 DD DSN=HEPAB,DISP=OLD,UNIT=MT,
// VOL=SER=HEP001,LABEL=(1,SL,,IN)

REC NO.	REV	STATION	MODE	START TIME	END TIME	MM:SS	BIT-L	BIT-H	READ	MM:SS	T-SEQ
4800 - 4806	7481	ESR-REPR	3	85/ 6/29 14:19:45	85/ 6/29 14:20: 9	0:28	0	7	7	0:28	
4807 - 4816	7535	ESR-REPR	3	85/ 7/ 3 5:15:47	85/ 7/ 3 5:16:21	0:38	1	9	10	0:52	
4817 - 4998	7536	KSC-REPR	3	85/ 7/ 3 5:16:26	85/ 7/ 3 5:28:29	12: 7	2	180	182	12:32	
4999 - 5003	7537	ESR-REPR	3	85/ 7/ 3 6:53:55	85/ 7/ 3 6:54: 9	0:18	1	4	5	0:32	
5004 - 5118	7538	ESR-REPR	3	85/ 7/ 3 8:27:47	85/ 7/ 3 8:40:17	12:34	2	113	115	8: 4	
5119 - 5310	7539	ESR-REPR	3	85/ 7/ 3 10: 5:55	85/ 7/ 3 10:18:37	12:46	1	191	192	13: 0	
5311 - 5467	7540	KSC-REPR	3	85/ 7/ 3 11:20:33	85/ 7/ 3 11:54:37	34: 8	3	154	157	11: 4	
5468 - 5627	7550	KSC-REPR	3	85/ 7/ 4 3:46:11	85/ 7/ 4 3:56:45	10:38	1	159	160	10:52	
5628 - 5820	7565	KSC-REPR	3	85/ 7/ 5 3:46:11	85/ 7/ 5 5:30:34	104:39	2	191	193	13:16	
5821 - 5869	7565	ESR-REPR	3	85/ 7/ 5 5:30:37	85/ 7/ 5 5:33:49	3:16	0	49	49	3:16	
5870 - 6152	7567	ESR-REPR	3	85/ 7/ 5 6:59:25	85/ 7/ 5 8:44:25	105: 4	6	277	283	20: 4	
6153 - 6308	7569	ESR-REPR	3	85/ 7/ 5 10:11:15	85/ 7/ 5 10:23:57	12:46	2	154	156	10:48	
6309 - 6453	7570	KSC-REPR	3	85/ 7/ 5 11:25:53	85/ 7/ 5 11:57:11	31:34	1	144	145	9:52	
6454 - 6453	7580	ESR-REPR	3	85/ 7/ 6 4:16: 5	85/ 7/ 6 4:16: 5	0:16	0	1	1	0: 4	
6455 - 6612	7580	ESR-REAL	3	85/ 7/ 6 4:43:41	85/ 7/ 6 4:54: 9	10:44	1	157	158	10:44	
6613 - 6803	7581	ESR-REPR	3	85/ 7/ 6 4:54:19	85/ 7/ 6 5:36:30	42:15	1	190	191	12:56	
6804 - 6995	7582	ESR-REPR	3	85/ 7/ 6 7: 1:56	85/ 7/ 6 7:14:38	12:46	1	191	192	13: 0	
6996 - 7187	7583	ESR-REPR	3	85/ 7/ 6 8:35:48	85/ 7/ 6 8:48:30	12:46	2	190	192	13:12	
7188 - 7244	7584	ESR-REPR	3	85/ 7/ 6 10:13:56	85/ 7/ 6 10:23:26	9:34	1	56	57	4: 0	
7245 - 7286	7570	KSC-REPR	3	85/ 7/ 6 11:57:13	85/ 7/ 6 11:59:57	2:48	0	42	42	2:48	???
7287 - 7478	7580	KSC-REPR	3	85/ 7/ 6 3:38: 9	85/ 7/ 6 4: 1:33	23:28	1	191	192	13: 0	
7479 - 7670	7585	KSC-REPR	3	85/ 7/ 6 11:28:34	85/ 7/ 6 12: 2:38	34: 8	0	192	192	12:48	
7671 - 7862	7610	KSC-REPR	3	85/ 7/ 8 3:53: 8	85/ 7/ 8 4: 5:51	12:47	1	191	192	13: 0	
7863 - 8017	7610	ESR-REAL	3	85/ 7/ 8 4:49:15	85/ 7/ 8 4:59:43	10:32	1	154	155	10:32	
8018 - 8209	7611	ESR-REPR	3	85/ 7/ 8 5:25:54	85/ 7/ 8 5:38:37	12:47	1	191	192	13: 0	
8210 - 8334	7612	ESR-REPR	3	85/ 7/ 8 7: 8:30	85/ 7/ 8 7:16:45	8:19	2	123	125	8:44	
8335 - 8445	7613	ESR-REPR	3	85/ 7/ 8 8:40: 2	85/ 7/ 8 8:52:17	12:19	2	109	111	7:48	
8446 - 8495	7614	ESR-REPR	3	85/ 7/ 8 10:20: 9	85/ 7/ 8 10:30:41	10:36	4	46	50	4: 8	
8496 - 8495	7615	???-????999		85/ 7/ 8 12:42:45	85/ 7/ 8 12:42:45	0: 4	1	0	1	0:16	
8497 - 8689	7624	KSC-REPR	3	85/ 7/ 9 2:18:49	85/ 7/ 9 3:13:37	55: 4	3	190	193	13:28	
8690 - 8844	7624	ESR-REAL	3	85/ 7/ 9 3:13:52	85/ 7/ 9 3:24: 8	10:20	0	155	155	10:20	
8845 - 9036	7625	ESR-REPR	3	85/ 7/ 9 3:52:34	85/ 7/ 9 4: 5:17	12:47	2	190	192	13:12	
9037 - 9164	7626	ESR-REPR	3	85/ 7/ 9 7: 4:35	85/ 7/ 9 7:17:17	12:46	2	126	128	8:56	
9165 - 9356	7628	ESR-REPR	3	85/ 7/ 9 8:42:43	85/ 7/ 9 8:55:25	12:46	2	190	192	13:12	
9357 - 9548	7629	KSC-REPR	3	85/ 7/ 9 9:57:21	85/ 7/ 9 10:31:25	34: 8	0	192	192	12:48	
9549 - 9741	7639	KSC-REPR	3	85/ 7/10 2:21:22	85/ 7/10 3:16: 3	54:57	2	191	193	13:16	
9742 - 9903	7639	ESR-REAL	3	85/ 7/10 3:16: 5	85/ 7/10 3:26:49	10:48	0	162	162	10:48	
9904 - 10095	7640	ESR-REPR	3	85/ 7/10 3:56:51	85/ 7/10 4: 9:33	12:46	1	191	192	13: 0	
10096 - 10243	7641	ESR-REPR	3	85/ 7/10 5:37:54	85/ 7/10 5:47:41	9:51	2	146	148	10:16	
10244 - 10435	7642	ESR-REPR	3	85/ 7/10 7: 8:51	85/ 7/10 7:21:33	12:46	1	191	192	13: 0	
10436 - 10624	7643	ESR-REPR	3	85/ 7/10 8:47:12	85/ 7/10 8:59:41	12:33	1	188	189	12:48	
10625 - 10808	7644	KSC-REPR	3	85/ 7/10 9:59:29	85/ 7/10 10:35:41	36:16	1	183	184	12:28	
10809 - 11001	7654	KSC-REPR	3	85/ 7/11 2:23:30	85/ 7/11 3:18:42	55:28	3	190	193	13:28	
11002 - 11161	7654	ESR-REAL	3	85/ 7/11 3:18:45	85/ 7/11 3:29:25	10:44	1	159	160	10:52	
11162 - 11353	7655	ESR-REPR	3	85/ 7/11 3:57:23	85/ 7/11 4:10: 5	12:46	1	191	192	13: 0	

HEX DUMP OF LIZ

D108371
7/13/84 - 11/15/84

02232 REV
↓
04099

D108371
7/13/84 → 11/15/84

FILE 1 RECORD 1 15084 BYTES

(0)	000140F8	F44040F7	40F1F340	40F640F3	F840F5F3	4040F2F2	F3F20000	00540000	00070000	000D0000
(40)	00060000	00260000	00350000	08B80000	00060000	00160000	00010000	001B0000	001B0000	001B0000
(80)	001B0000	001B0000	001B0000	001B0000	001B4181	99A041EB	33104294	3C3C4292	D2D241D4	D4D40000
(120)	00000000	00000000	00014216	D75F424E	19BE4316	973D41D2	692D4111	7FF84490	C0D841BD	AD1741B8
(160)	A23E45FD	517B0000	0000C436	72A04469	C4754451	B50E427C	7BB8422A	DF12C110	00000000	00005C5C
(200)	5C5CC5C5	C5C5B5B5	B4B40000	00000000	00000000	00000000	00000000	00000000	00000000	00000000
(240)	00000000	00000000	00000000	00000000	00000000	00000000	00000000	00000000	00000000	00000000
(280)	00000000	00000000	00000000	00000000	00000000	00000000	00000000	00000000	00000000	00000000
(320)	00000000	00000000	00000000	00000000	00000000	00000000	00000000	00000000	00000000	00000000
(360)	00000000	00000000	00000000	00000000	00000000	00000000	00000000	00000000	00000000	00000000
(400)	00000000	00000000	00000000	00000000	00000000	00000000	00000000	00000000	00000000	00000000
(440)	00000000	00000000	00000000	00000000	00000000	00000000	00000000	00000000	00000000	00000000
(480)	00000000	00000000	00000000	00000000	00000000	00000000	00000000	00000000	00000000	00000000
(520)	00000000	00000000	00000000	00000000	00000000	00000000	00000000	00000000	00000000	00000000
(560)	00000000	00000000	00000000	00000000	00000000	00000000	00000000	00000000	00000000	00000000
(600)	00000000	00000000	00000000	00000000	00000000	00000000	00000000	00000000	00000000	00000000
(640)	00000000	00000000	00000000	00000000	00000000	00000000	00000000	00000000	00000000	00000000
(680)	00000000	00000000	00000000	00000000	00000000	00000000	00000000	00000000	00000000	00000000
(720)	00000000	00000000	00000000	00000000	00000000	00000000	00000000	00000000	00000000	00000000
(760)	00000000	00000000	00000000	00000000	00000000	00000000	00000000	00000000	00000000	00000000
(800)	00000000	00000000	00000000	00000000	00000000	00000000	00000000	00000000	00000000	00000000
(840)	00000000	00000000	00000000	00000000	00000000	00000000	00000000	00000000	00000000	00000000
(880)	00000000	00000000	00000000	00000000	00000000	00000000	00000000	00000000	00000000	00000000
(920)	00000000	00000000	00000000	00000000	00000000	00000000	00000000	00000000	00000000	00000000
(960)	00010000	00000000	00000000	00000000	00000000	00000000	00000000	00000000	00000000	00000000
(1000)	00000000	00000000	00000000	00000000	00000000	00000000	00000000	00000000	00000000	00000000
(1040)	00000000	00000000	00000000	00000000	00000000	00000000	00000000	00000000	00000000	00000000
(1080)	00000000	00000000	00000000	00000000	00000000	00000000	00000000	00000000	00000000	00000000
(1120)	00000000	00000000	00000000	00000000	00000000	00000000	00000000	00000000	00000000	00000000
(1160)	00000000	00000000	00000000	00000000	00000000	00000000	00000000	00000000	00000000	00000000
(1200)	00000000	00000000	00000000	00000000	00000000	00000000	00000000	00000000	00000000	00000000
(1240)	00000000	00000000	00000000	00000000	00000000	00000000	00000000	00000000	00000000	00000000
(1280)	00000000	00000000	00000000	00000000	00000000	00000000	00000000	00000000	00000000	00000000
(1320)	00000000	00000000	00000000	00000000	00000000	00000000	00000000	00000000	00000000	00000000
(1360)	00000000	00000000	00000000	00000000	00000000	00000000	00000000	00000000	00000000	00000000
(1400)	00000000	00000000	00000000	00000000	00000000	00000000	00000000	00000000	00000000	00000000
(1440)	00000000	00000000	00000000	00000000	00000000	00000000	00000000	00000000	00000000	00000000
(1480)	00000000	00000000	00000000	00000000	00000000	00000000	00010000	00000000	00000000	00000000
(1520)	00000000	00000000	00000000	00000000	00000000	00000000	00000000	00000000	00000000	00010000

Dump

(1560)	00000000	00010000	00000000	00000000	00000000	00000000	00000000	00000000	00000000	00000000
(1600)	00000000	00000000	00000000	00000000	00010000	00000000	00000000	00010000	00000000	00000000
(1640)	00000000	00000000	00010000	00000000	00010000	00000000	00000000	00000000	00000000	000140F8
(1680)	F44040F7	40F1F340	40F640F3	F840F5F7	4040F2F2	F3F20000	00540000	00070000	000D0000	00060000
(1720)	00260000	00390000	08B80000	00060000	00160000	00010000	001B0000	001B0000	001B0000	001B0000
(1760)	001B0000	001B0000	001B0000	001B4171	99A041EB	33104294	3C3C4292	D2D241D4	D4D40000	00000000
(1800)	00000000	00014216	95DD424E	2AE24316	932C41CE	3C944111	70844490	4EB341BD	C3ED41B8	B0CE45FC
(1840)	89BA0000	0000C436	72A04469	C4754450	2B2E427B	FA0C422A	7F68C110	00000000	00005C5C	5C5CC5C6
(1880)	C6C6B4B3	B3B30000	00000000	00000000	00000000	00000000	00000000	00000000	00000000	00000000
(1920)	00000000	00000000	00000000	00000000	00000000	00000000	00000000	00000000	00000000	00000000
(1960)	00000000	00000000	00000000	00000000	00000000	00000000	00000000	00000000	00000000	00000000
(2000)	00000000	00000000	00000000	00000000	00000000	00000000	00000000	00000000	00000000	00000000
(2040)	00000000	00000000	00000000	00000000	00000000	00000000	00000000	00000000	00000000	00000000
(2080)	00000000	00000000	00000000	00000000	00000000	00000000	00000000	00000000	00000000	00000000
(2120)	00000000	00000000	00000000	00000000	00000000	00000000	00000000	00000000	00000000	00000000
(2160)	00000000	00000000	00000000	00000000	00000000	00000000	00000000	00000000	00000000	00000000
(2200)	00000000	00000000	00000000	00000000	00000000	00000000	00000000	00000000	00000000	00000000
(2240)	00000000	00000000	00000000	00000000	00000000	00000000	00000000	00000000	00000000	00000000
(2280)	00000000	00000000	00000000	00000000	00000000	00000000	00000000	00000000	00000000	00000000
(2320)	00000000	00000000	00000000	00000000	00000000	00000000	00000000	00000000	00000000	00000000
(2360)	00000000	00000000	00000000	00000000	00000000	00000000	00000000	00000000	00000000	00000000
(2400)	00000000	00000000	00000000	00000000	00000000	00000000	00000000	00000000	00000000	00000000
(2440)	00000000	00000000	00000000	00000000	00000000	00000000	00000000	00000000	00000000	00000000
(2480)	00000000	00000000	00000000	00000000	00000000	00000000	00000000	00000000	00000000	00000000
(2520)	00000000	00000000	00000000	00000000	00000000	00000000	00000000	00000000	00000000	00000000
(2560)	00000000	00000000	00000000	00000000	00000000	00000000	00000000	00000000	00000000	00000000
(2600)	00000000	00000000	00000000	00000000	00000000	00000000	00000000	00000000	00000000	00000000
(2640)	00000000	00000000	00000000	00000000	00000000	00000000	00000000	00000000	00000000	00000000
(2680)	00000000	00000000	00000000	00000000	00000000	00000000	00000000	00000000	00000000	00000000
(2720)	00000000	00000000	00000000	00000000	00000000	00000000	00000000	00000000	00000000	00000000
(2760)	00000000	00000000	00000000	00000000	00000000	00000000	00000000	00000000	00000000	00000000
(2800)	00000000	00000000	00000000	00000000	00000000	00000000	00000000	00000000	00000000	00000000
(2840)	00000000	00000000	00000000	00000000	00000000	00000000	00000000	00000000	00000000	00000000
(2880)	00000000	00000000	00000000	00000000	00000000	00000000	00000000	00000000	00000000	00000000
(2920)	00000000	00000000	00000000	00000000	00000000	00000000	00000000	00000000	00000000	00000000
(2960)	00000000	00000000	00000000	00000000	00000000	00000000	00000000	00000000	00000000	00000000
(3000)	00000000	00000000	00000000	00000000	00000000	00000000	00000000	00000000	00000000	00000000
(3040)	00000000	00000000	00000000	00000000	00000000	00000000	00000000	00000000	00000000	00000000
(3080)	00000000	00000000	00000000	00000000	00000000	00000000	00000000	00000000	00000000	00000000
(3120)	00000000	00000000	00000000	00000000	00000000	00000000	00000000	00000000	00000000	00000000
(3160)	00000000	00000000	00000000	00000000	00000000	00010000	00000000	00000000	00000000	00000000
(3200)	00000000	00000000	00000000	00000000	00000000	00000000	00000000	00000000	00000000	00000000
(3240)	00000000	00000000	00000000	00000000	00000000	00000000	00000000	00000000	00000000	00000000
(3280)	00000000	00000000	00000000	00010000	00000000	00000000	00010000	00000000	00000000	00000000

FILE 1 RECORD 9848 11732 BYTES

8 4 11 15 04099

(0)	000140F8	F440F1F1	40F1F540	F1F04040	F74040F9	4040F4F0	F9F90000	00540000	000B0000	000F0000
(40)	000A0000	00070000	00090000	10030000	00060000	000C0000	00010000	00030000	00030000	00030000
(80)	00030000	00030000	00030000	00030000	00004199	99A04214	B3314295	A5A54294	3C3C41D4	D4D40000
(120)	00000000	00040000	0001C246	AB74424D	5D304319	168BC24E	99024211	C94F44AE	9CE441F4	6DA241C8
(160)	45BE4613	19280000	0000C33E	C1E0C482	3209C47C	7630422E	4D854288	4692C110	00000000	00007D7D
(200)	7D7D2B2B	2B2B2F2F	2F2F0000	00000000	00000000	00000000	00000000	00000000	00000000	00000000
(240)	00000000	00000000	00000000	00000000	00000000	00000000	00010000	00000000	00000000	00000000
(280)	00000000	00000000	00000000	00000000	00000000	00000000	00000000	00000000	00000000	00000000
(320)	00000000	00000000	00000000	00000000	00000000	00000000	00000000	00000000	00000000	00000000
(360)	00000000	00000000	00000000	00000000	00000000	00000000	00000000	00000000	00000000	00000000
(400)	00000000	00000000	00000000	00000000	00000000	00000000	00000000	00000000	00000000	00000000
(440)	00000000	00000000	00000000	00000000	00000000	00000000	00000000	00000000	00000000	00000000
(480)	00000000	00000000	00000000	00000000	00000000	00000000	00000000	00000000	00000000	00000000
(520)	00000000	00000000	00000000	00000000	00000000	00000000	00000000	00010000	00000000	00000000
(560)	00000000	00000000	00000000	00000000	00000000	00000000	00000000	00000000	00000000	00000000
(600)	00000000	00000000	00000000	00000000	00000000	00000000	00000000	00000000	00000000	00000000
(640)	00000000	00000000	00000000	00000000	00000000	00000000	00000000	00000000	00000000	00000000
(680)	00000000	00000000	00000000	00000000	00000000	00000000	00010000	00000000	00000000	00000000
(720)	00000000	00000000	0000FFFF	FFFFFFFF	FFFFFFFF	FFFFFFFF	FFFFFFFF	FFFFFFFF	FFFFFFFF	FFFFFFFF
(760)	FFFFFFFF	FFFFFFFF	FFFFFFFF	FFFFFFFF	FFFFFFFF	FFFFFFFF	FFFFFFFF	FFFFFFFF	FFFFFFFF	FFFFFFFF
(800)	FFFFFFFF	FFFFFFFF	FFFF0000	00000000	00000000	00000000	00000000	00000000	00000000	00000000
(840)	00000000	00000000	00000000	00000000	00000000	00000000	00010000	00000000	00000000	00000000
(880)	00000000	00000000	00000000	00000000	00000000	00000000	00000000	00000000	00000000	00000000
(920)	00000000	00000000	00000000	00000000	00000000	00000000	00020000	00000000	00000000	00000000
(960)	00000000	00000000	00000000	00000000	00000000	00000000	00000000	00000000	00000000	00000000
(1000)	00000000	00000000	00000000	00000000	00000000	00000000	00010000	00000000	00000000	00000000
(1040)	00000000	00000000	00000000	00000000	00000000	00000000	00000000	00000000	00000000	00000000
(1080)	00010000	00000000	00000000	00000000	00000000	00000000	00000000	00000000	00000000	00000000
(1120)	00000000	00000000	00000000	00000000	00000000	00000000	00010000	00000000	00000000	00000000
(1160)	00000000	00000000	00000000	00000000	00000000	00000000	00000000	00000000	00000000	00000000
(1200)	00000000	00000000	00000000	00000000	00000000	00000000	00000000	00000000	00000000	00000000
(1240)	00000000	00000000	00000000	00000000	00000000	00000000	00000000	00000000	00000000	00000000
(1280)	00000000	00000000	00000000	00000000	00000000	00000000	00020000	00000000	00000000	00000000
(1320)	00000000	00000000	00000000	00000000	00010000	00000000	00000000	00010000	00000000	00000000
(1360)	00000000	00000000	00000000	00000000	00000000	00000000	00000000	00000000	00000000	00000000
(1400)	00000000	00000000	0000FFFF	FFFFFFFF	FFFFFFFF	FFFFFFFF	FFFFFFFF	FFFFFFFF	FFFFFFFF	FFFFFFFF
(1440)	FFFFFFFF	FFFFFFFF	FFFFFFFF	FFFFFFFF	FFFFFFFF	FFFFFFFF	FFFFFFFF	FFFFFFFF	FFFFFFFF	FFFFFFFF
(1480)	FFFFFFFF	FFFFFFFF	FFFF0000	00000000	00010000	00000000	00000000	00000000	00000000	00000000
(1520)	00000000	00000000	00000000	00000000	00000000	00000000	00000000	00000000	00000000	00000000
(1560)	00000000	00020000	00000000	00000000	00000000	00000000	00000000	00000000	00000000	00000000
(1600)	00000000	00000000	00000000	00000000	00010000	00000000	00000000	00010000	00000000	00000000

(1640)	00000000	00000000	00010000	00000000	00010000	00000000	00000000	00000000	00000000	000140F8
(1680)	F440F1F1	40F1F540	F1F04040	F740F1F3	4040F4F0	F9F90000	00540000	000B0000	000F0000	000A0000
(1720)	00070000	000D0000	10030000	00060000	000C0000	00010000	00030000	00030000	00030000	00030000
(1760)	00030000	00030000	00030000	00034199	99A04214	B3314295	A5A54294	3C3C41D4	D4D40000	00000000
(1800)	00000000	0001C246	D2FD424D	FEF54319	1E93C24E	D6524212	677D44AF	2A5841F5	1EBD41C8	58194613
(1840)	28A10000	0000C33E	C1E0C483	BA49C47C	7630422E	A3234288	9C41C110	00000000	00007D7D	7D7D2A2A
(1880)	2A2A2F2F	2F2F0000	00000000	00000000	00000000	00000000	00000000	00000000	00000000	00000000
(1920)	00000000	00000000	00000000	00000000	00000000	00000000	00000000	00000000	00000000	00000000
(1960)	00000000	00000000	00000000	00000000	00000000	00000000	00000000	00000000	00000000	00000000
(2000)	00000000	00000000	00000000	00000000	00000000	00000000	00010000	00000000	00000000	00000000
(2040)	00000000	00000000	00000000	00000000	00000000	00000000	00000000	00000000	00000000	00000000
(2080)	00000000	00000000	00000000	00000000	00000000	00000000	00000000	00000000	00000000	00000000
(2120)	00000000	00000000	00000000	00000000	00000000	00000000	00000000	00000000	00000000	00000000
(2160)	00000000	000C0000	00000000	00000000	00000000	00020000	00000000	00000000	00000000	00000000
(2200)	00000000	00000000	00000000	00000000	00000000	00000000	00000000	00000000	00000000	00000000
(2240)	00000000	00000000	00000000	00000000	00000000	00000000	00000000	00000000	00000000	00000000
(2280)	00000000	00000000	00010000	00000000	00000000	00010000	00000000	00010000	00000000	00000000
(2320)	00000000	00000000	00000000	00000000	00000000	00000000	00000000	00000000	00000000	00000000
(2360)	00000000	00000000	06000000	00000000	00000000	00000000	00000000	00000000	00000000	00000000
(2400)	00000000	00000000	00000000	00000000	00000000	00000000	00000000	00000000	00000000	00000000
(2440)	00000000	00000000	00000000	00000000	00000000	03600000	00000000	00000000	00000000	00000000
(2480)	00000000	00000000	00000000	00000000	00000000	00000000	00000000	00000000	00000000	00000000
(2520)	00000000	00000000	00000000	00000000	00000000	00000000	00000000	00000000	00000000	00000000
(2560)	00000000	00000000	00000000	00000000	00000000	00000000	00000000	00000000	00000000	00000000
(2600)	00000000	00000000	00000000	00000000	00000000	00000000	00000000	00000000	00000000	00000000
(2640)	00000000	00000000	00000000	00000000	00000000	00010000	00000000	00010000	00000000	00000000
(2680)	00000000	00000000	00000000	00000000	00000000	00000000	00000000	00000000	00000000	00000000
(2720)	00000000	00000000	00000000	00000000	00000000	00000000	00000000	00000000	00000000	00000000
(2760)	00000000	00000000	00000000	00000000	00000000	00010000	00000000	30000000	00000000	00000000
(2800)	00000000	00000000	00000000	00000000	00000000	00000000	00000000	00000000	00000000	00000000
(2840)	00000000	00000000	00000000	00000000	00000000	00010000	00000000	00000000	00000000	00000000
(2880)	00000000	00000000	00000000	00000000	00000000	00000000	00000000	00000000	00000000	00000000
(2920)	00000000	00000000	00000000	00000000	00060000	00000000	00010000	00000000	00000000	00000000
(2960)	00000000	00000000	00000000	00000000	00000000	00030000	00000000	00000000	00000000	00000000
(3000)	00000000	00000000	00000000	00000000	00000000	00000000	00000000	00000000	00000000	00000000
(3040)	00000000	00000000	00000000	00000000	00000000	00000000	00000000	00000000	00000000	00000000
(3080)	00000000	00000000	00000000	00000000	00000000	00000000	00000000	00000000	00000000	00000000
(3120)	00000000	00000000	00000000	00000000	00000000	00010000	00010000	00010000	00000000	00000000
(3160)	00180000	00000000	00000000	00000000	00010000	00000000	00000000	00000000	00000000	00000000
(3200)	00000000	00000000	00000000	00000000	00000000	00000000	00000000	00000000	00000000	00010000
(3240)	00000000	00000000	00010000	00000000	00000000	00000000	00000000	00000000	00000000	00000000
(3280)	00000000	00000000	00000000	00010000	00000000	00000000	00010000	00000000	00000000	00000000
(3320)	00000000	00010000	00000000	00010000	00000000	00000000	00000000	00000000	000140F8	F440F1F1
(3360)	40F1F540	F1F04040	F740F1F7	4040F4F0	F9F90000	00540000	000B0000	000F0000	000A0000	00070000

(10440)	06C00000	00000000	6A000000	00000000	00600000	00180000	00000000	06000000	00000000	00000000
(10480)	01800000	06000000	00000000	00180000	00300000	00000000	00000000	00000000	00000000	000A0000
(10520)	63300000	03000000	00030000	00000000	00000000	00060000	00000000	00000000	01830000	00030000
(10560)	60010000	00000000	00000000	00030000	00000000	00000000	0000FFFF	FFFFFFFF	FFFFFFFF	FFFFFFFF
(10600)	FFFFFFFF	FFFFFFFF	FFFFFFFF	FFFFFFFF	FFFFFFFF	FFFFFFFF	FFFFFFFF	FFFFFFFF	FFFFFFFF	FFFFFFFF
(10640)	FFFFFFFF	FFFFFFFF	FFFFFFFF	FFFFFFFF	FFFFFFFF	FFFFFFFF	FFFFFFFF	FFFFFFFF	FFFFFFFF	FFFFFFFF
(10680)	FFFFFFFF	FFFFFFFF	FFFFFFFF	FFFFFFFF	FFFFFFFF	FFFFFFFF	FFFFFFFF	FFFFFFFF	FFFFFFFF	FFFFFFFF
(10720)	FFFFFFFF	FFFFFFFF	FFFFFFFF	FFFFFFFF	FFFFFFFF	FFFFFFFF	FFFFFFFF	FFFFFFFF	FFFFFFFF	FFFFFFFF
(10760)	FFFFFFFF	FFFFFFFF	FFFFFFFF	FFFFFFFF	FFFFFFFF	FFFFFFFF	FFFFFFFF	FFFFFFFF	FFFFFFFF	FFFFFFFF
(10800)	FFFFFFFF	FFFFFFFF	FFFFFFFF	FFFFFFFF	FFFFFFFF	FFFFFFFF	FFFFFFFF	FFFFFFFF	FFFFFFFF	FFFFFFFF
(10840)	FFFFFFFF	FFFFFFFF	FFFFFFFF	FFFFFFFF	FFFFFFFF	FFFFFFFF	FFFFFFFF	FFFFFFFF	FFFFFFFF	FFFFFFFF
(10880)	FFFFFFFF	FFFFFFFF	FFFFFFFF	FFFFFFFF	FFFFFFFF	FFFFFFFF	FFFF0000	00030000	00060000	00000000
(10920)	00C60000	00000000	0C000000	000C0000	00000000	000C0000	00000000	00000000	00000000	03000000
(10960)	31810000	030C0000	01400000	00000000	00300000	000C0000	00000000	00000000	0C000000	01800000
(11000)	06030000	00010000	58C00000	00030000	00000000	00030000	00000000	00030000	03000000	00000000
(11040)	00000000	00010000	00000000	00000000	00000000	00000000	00000000	036C0000	00780000	00000000
(11080)	00010000	06300000	00010000	00000000	00060000	00180000	00000000	00000000	00000000	00060000
(11120)	00300000	00000000	00000000	00010000	00000000	00000000	00000000	00000000	00300000	01980000
(11160)	03010000	1B180000	0D890000	00130000	00010000	00030000	00000000	00000000	00000000	00000000
(11200)	00300000	01800000	00600000	00000000	00600000	00000000	0000FFFF	FFFFFFFF	FFFFFFFF	FFFFFFFF
(11240)	FFFFFFFF	FFFFFFFF	FFFFFFFF	FFFFFFFF	FFFFFFFF	FFFFFFFF	FFFFFFFF	FFFFFFFF	FFFFFFFF	FFFFFFFF
(11280)	FFFFFFFF	FFFFFFFF	FFFFFFFF	FFFFFFFF	FFFFFFFF	FFFFFFFF	FFFFFFFF	FFFFFFFF	FFFFFFFF	FFFFFFFF
(11320)	FFFFFFFF	FFFFFFFF	FFFFFFFF	FFFFFFFF	FFFFFFFF	FFFFFFFF	FFFFFFFF	FFFFFFFF	FFFFFFFF	FFFFFFFF
(11360)	FFFFFFFF	FFFFFFFF	FFFFFFFF	FFFFFFFF	FFFFFFFF	FFFFFFFF	FFFFFFFF	FFFFFFFF	FFFFFFFF	FFFFFFFF
(11400)	FFFFFFFF	FFFFFFFF	FFFFFFFF	FFFFFFFF	FFFFFFFF	FFFFFFFF	FFFFFFFF	FFFFFFFF	FFFFFFFF	FFFFFFFF
(11440)	FFFFFFFF	FFFFFFFF	FFFFFFFF	FFFFFFFF	FFFFFFFF	FFFFFFFF	FFFFFFFF	FFFFFFFF	FFFFFFFF	FFFFFFFF
(11480)	FFFFFFFF	FFFFFFFF	FFFFFFFF	FFFFFFFF	FFFFFFFF	FFFFFFFF	FFFFFFFF	FFFFFFFF	FFFFFFFF	FFFFFFFF
(11520)	FFFFFFFF	FFFFFFFF	FFFFFFFF	FFFFFFFF	FFFFFFFF	FFFFFFFF	FFFF0000	00610000	00060000	00000000
(11560)	00010000	00000000	00000000	00000000	000C0000	00000000	00000000	00000000	00000000	00000000
(11600)	00000000	00000000	00010000	00010000	00010000	00020000	00800000	00010000	00000000	00000000
(11640)	00000000	00000000	00000000	00000000	00000000	00000000	00000000	00000000	00010000	00000000
(11680)	00000000	00010000	00000000	00000000	00000000	00000000	00000000	00000000	00000000	00000000
(11720)	00000000	00000000	00000000							