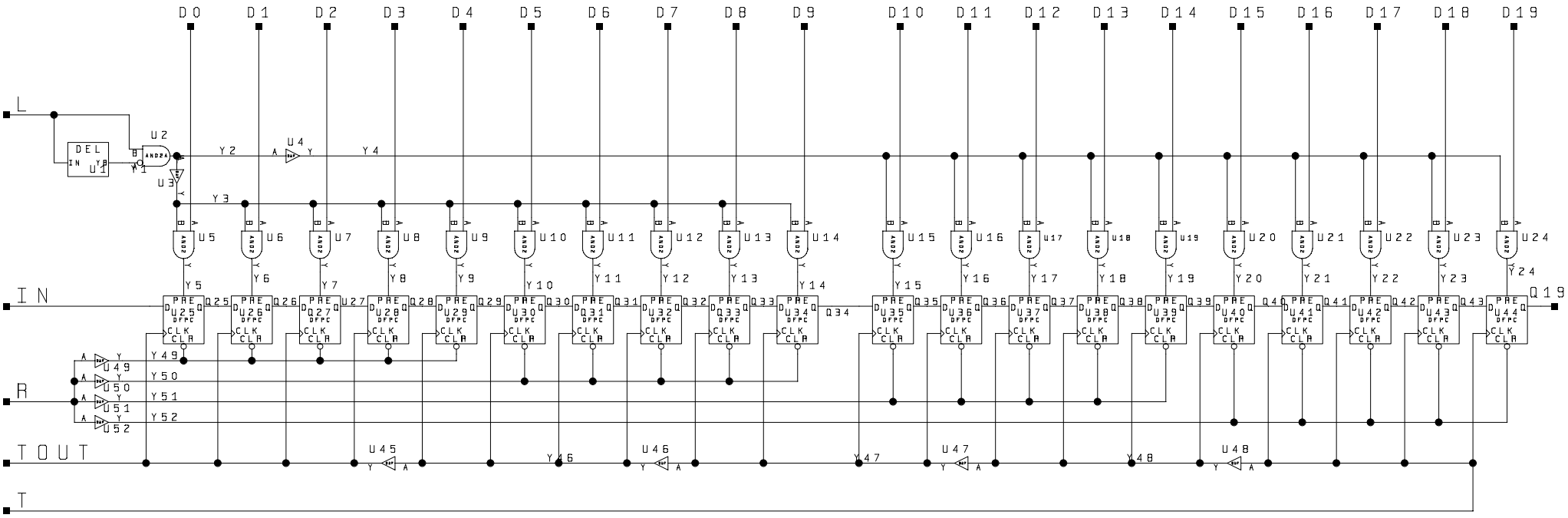

IMAGE FUV	ACTEL DESIGN		
TITLE 20 BIT SHIFT REGISTER			
DRAWN BY HEETDERKS	DATE 14AUG9797	DWG NO. 8023-V7	REV B
FILENAME SR20.1			