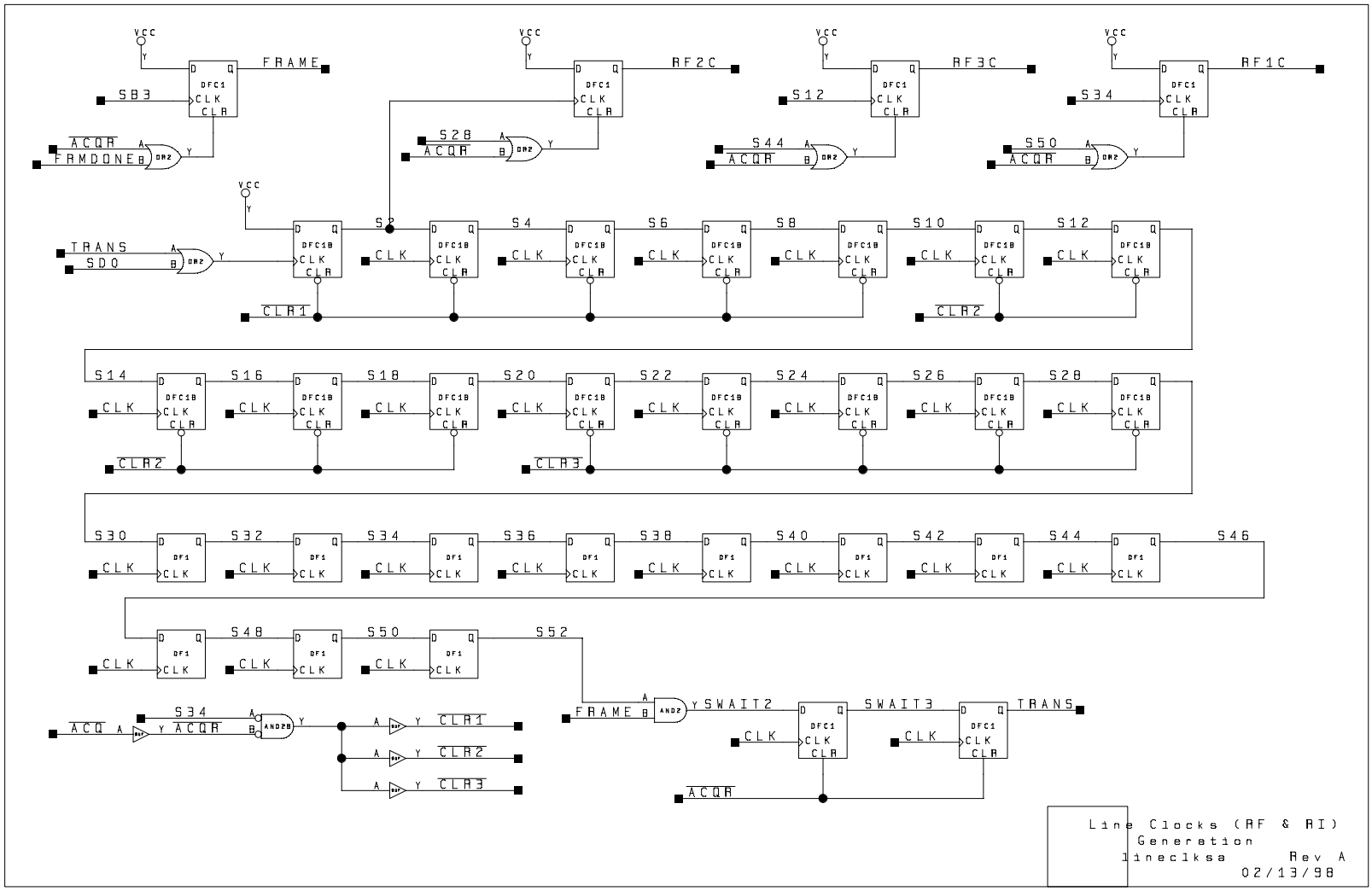
VCC
FRAME
RF2C
RF3C
RF1C
SB3
S12
S34
ACQR
FRMDONE
S28
S44
S50
TRANS
SDO
S2
S4
S6
S8
S10
S12
CLR1
CLR2
S14
S16
S18
S20
S22
S24
S26
S28
CLR3
S30
S32
S34
S36
S38
S40
S42
S44
S46
S48
S50
S52
ACQ
SWAIT2
SWAIT3
TRANS
Line Clocks (RF & RI)
Generation
lineclksa
Rev A
02/13/98