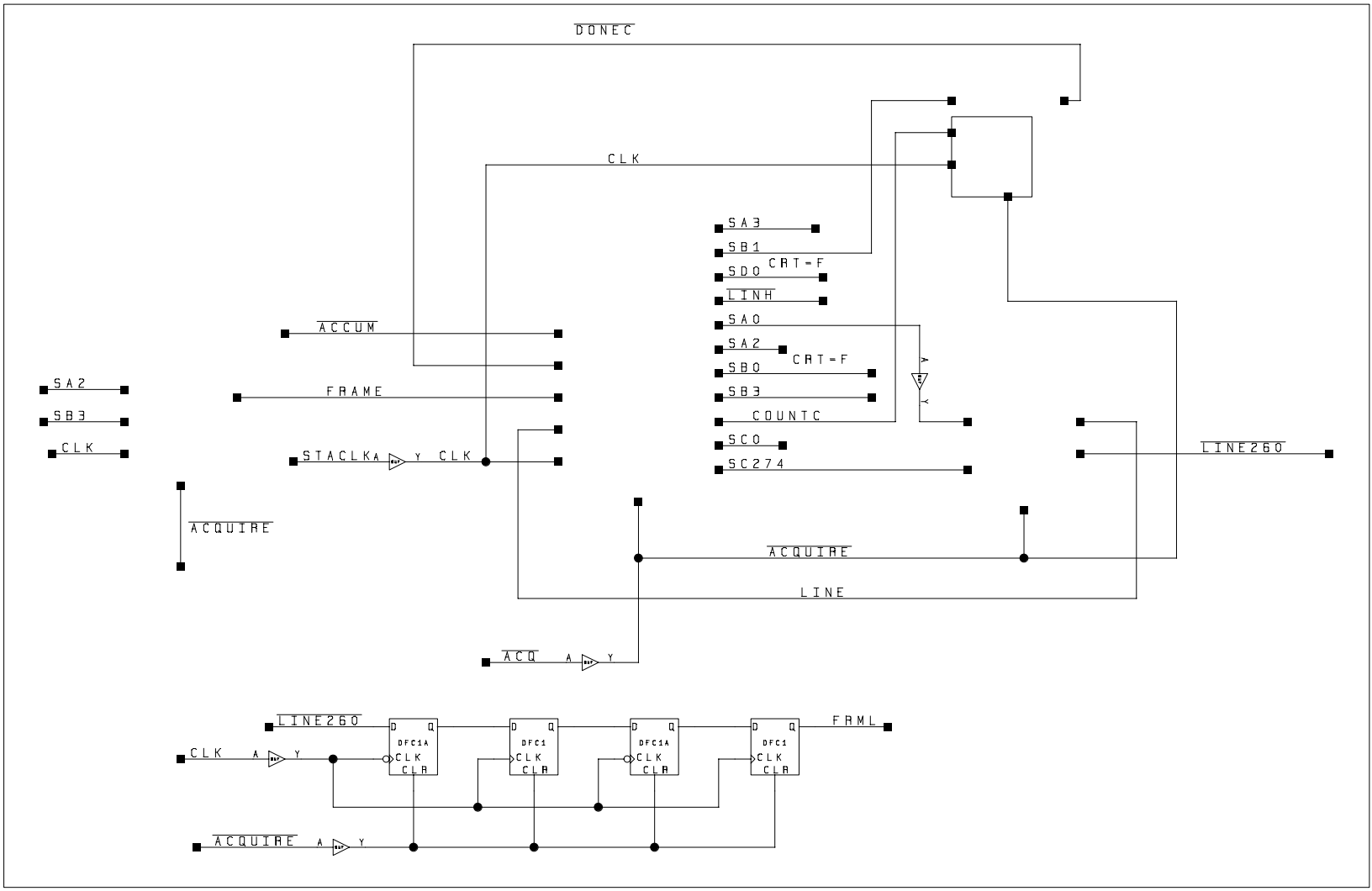
DONEC
CLK
SA3
SB1
SD0
CRT-F
LINH
SA0
SA2
SB0
CRT-F
SB3
COUNTC
SC0
SC274
ACCUM
FRAME
STACLKA
CLK
SA2
SB3
CLK
ACQUIRE
ACQUIRE
LINE
LINE260
ACQ
LINE260
CLK
ACQUIRE
DFC1A
DFC1
DFC1A
DFC1
FRML