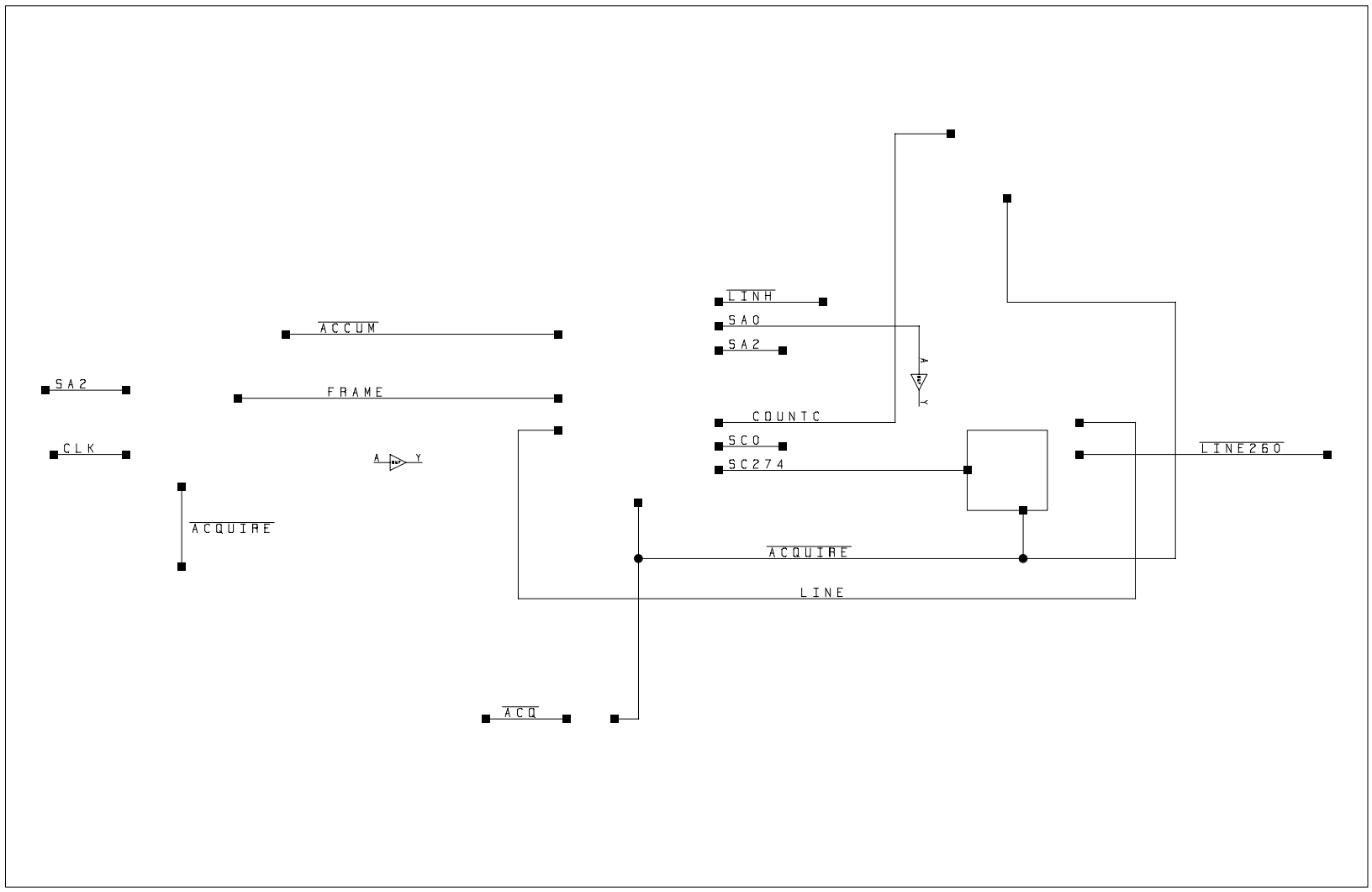
LINH
SA0
SA2
ACCUM
SA2
FRAME
COUNTC
CLK
SC0
SC274
LINE260
ACQUIRE
ACQUIRE
LINE
ACQ