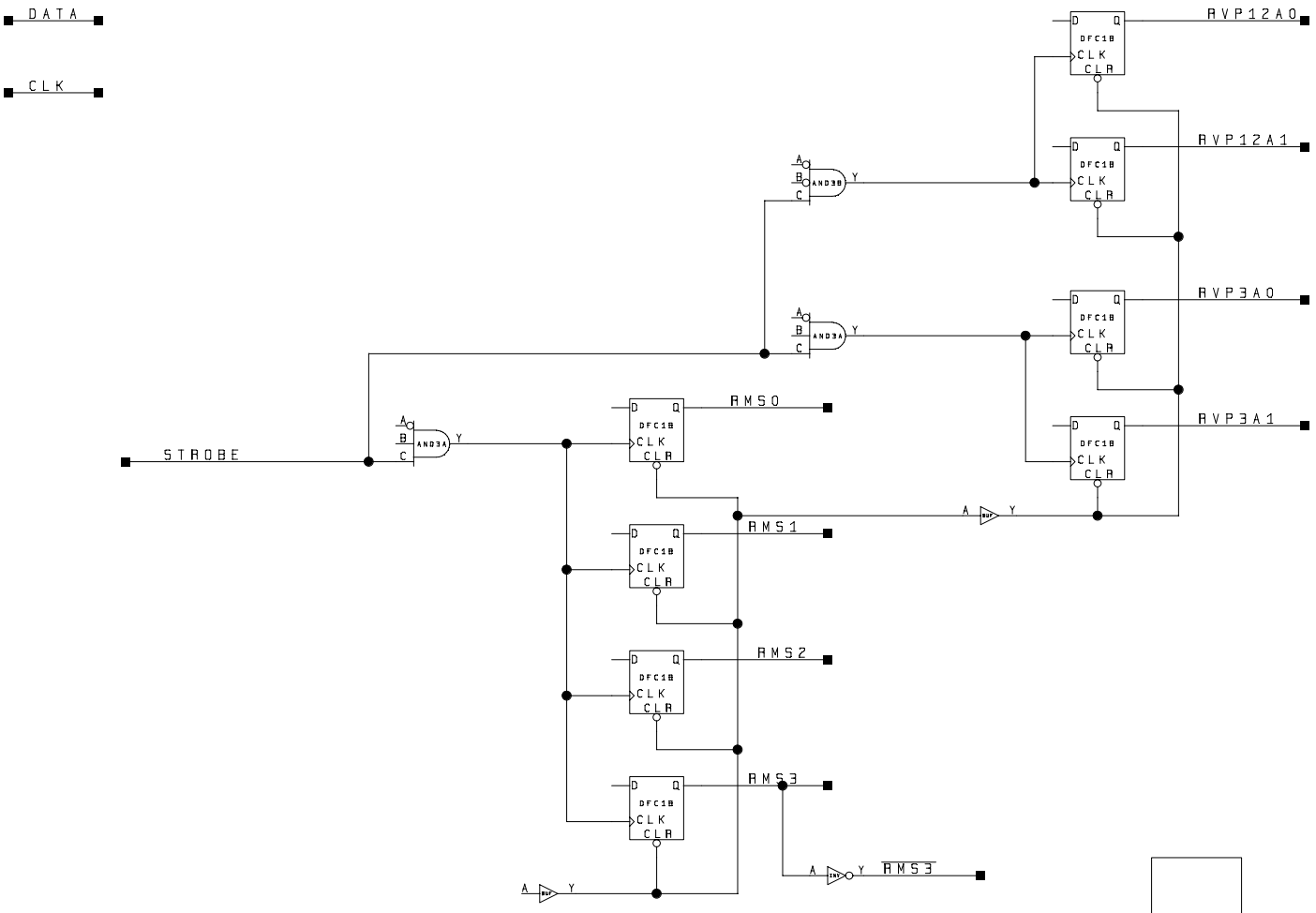
DATA
CLK
STROBE
RVP12A0
RVP12A1
RVP3A0
RVP3A1
RMS0
RMS1
RMS2
RMS3
RMS3
DFC1B
D
Q
CLK
CLR
AND3B
AND3A
A
B
C
Y
BUF
INV