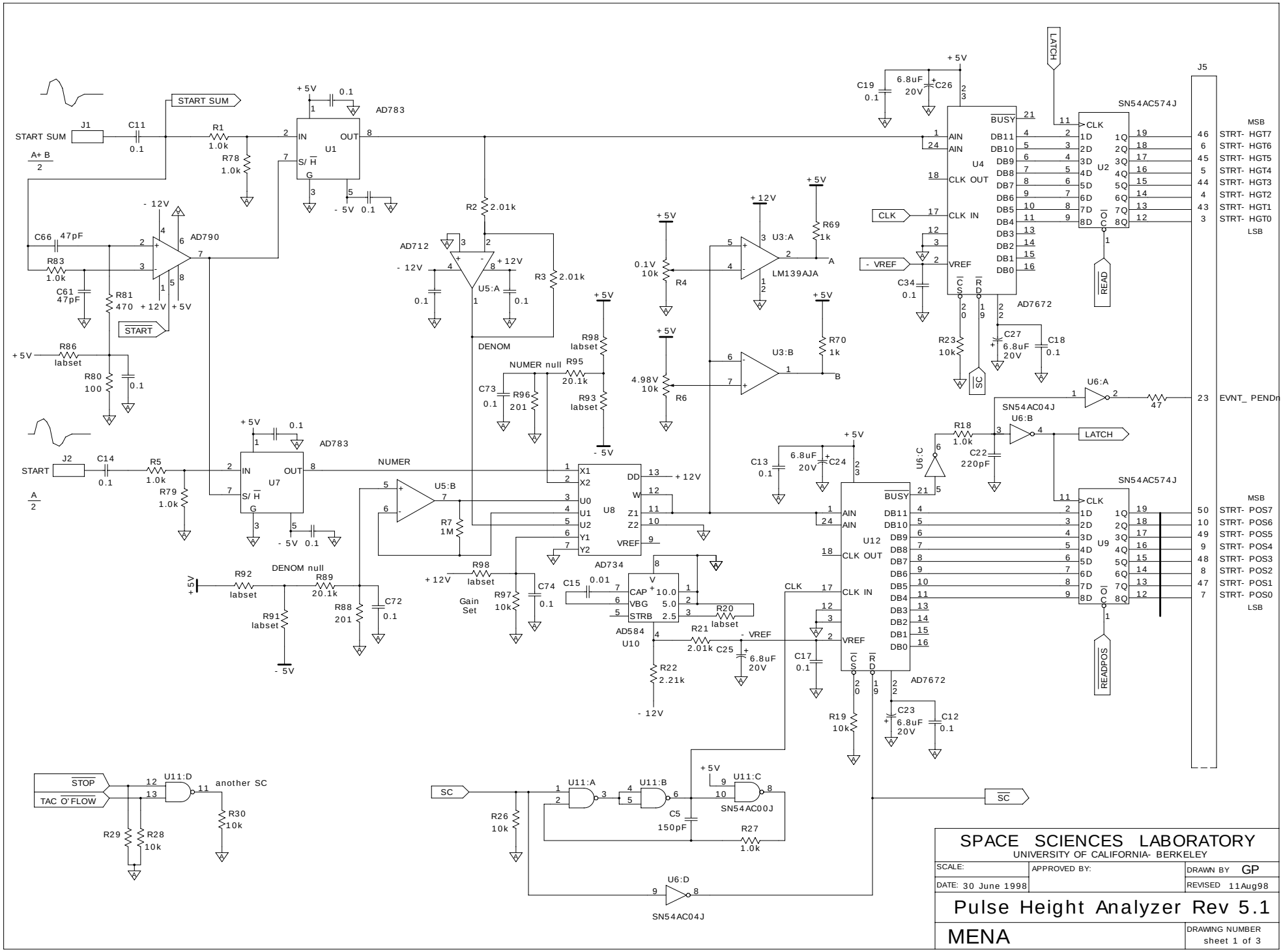
START SUM
J1
C11
0.1
R1
1.0k
R78
1.0k
A+ B
2
AD783
U1
IN
OUT
S/ H
G
+ 5V
0.1
- 5V
- 12V
C66 47pF
R83
1.0k
C61
47pF
R81
470
+ 12V
AD790
START
R86
labset
R80
100
R2 2.01k
R3 2.01k
AD712
U5:A
DENOM
NUMER null
R95
20.1k
R96
201
C73
0.1
R98
labset
R93
labset
R4
0.1V
10k
R6
4.98V
10k
U3:A
U3:B
LM139AJA
R69
1k
R70
1k
A
B
CLK
- VREF
C19
0.1
6.8uF
20V
C26
AIN
CLK OUT
CLK IN
VREF
BUSY
DB11
DB10
DB9
DB8
DB7
DB6
DB5
DB4
DB3
DB2
DB1
DB0
U4
AD7672
C34
0.1
R23
10k
C27
6.8uF
20V
C18
0.1
SC
LATCH
SN54AC574J
U2
CLK
1D
2D
3D
4D
5D
6D
7D
8D
1Q
2Q
3Q
4Q
5Q
6Q
7Q
8Q
OC
READ
J5
MSB
STRT- HGT7
STRT- HGT6
STRT- HGT5
STRT- HGT4
STRT- HGT3
STRT- HGT2
STRT- HGT1
STRT- HGT0
LSB
U6:A
47
EVNT_ PENDn
SN54AC04J
U6:B
R18
1.0k
C22
220pF
U6:C
START
J2
C14
0.1
R5
1.0k
R79
1.0k
A
2
U7
NUMER
U5:B
R7
1M
U8
X1
X2
U0
U1
U2
Y1
Y2
DD
W
Z1
Z2
VREF
AD734
+ 12V
C13
0.1
C24
6.8uF
20V
U12
AD7672
C17
0.1
C23
6.8uF
20V
C12
0.1
R19
10k
SN54AC574J
U9
READPOS
MSB
STRT- POS7
STRT- POS6
STRT- POS5
STRT- POS4
STRT- POS3
STRT- POS2
STRT- POS1
STRT- POS0
LSB
R92
labset
DENOM null
R89
20.1k
R91
labset
R88
201
C72
0.1
R98
labset
Gain
Set
R97
10k
C74
0.1
C15 0.01
AD584
U10
CAP
VBG
STRB
10.0
5.0
2.5
R20
labset
R21
2.01k
C25
6.8uF
20V
R22
2.21k
- 12V
STOP
TAC O'FLOW
U11:D
another SC
R30
10k
R29
R28
10k
SC
R26
10k
U11:A
U11:B
U11:C
C5
150pF
R27
1.0k
SN54AC00J
U6:D
SN54AC04J
SPACE SCIENCES LABORATORY
UNIVERSITY OF CALIFORNIA- BERKELEY
SCALE:
APPROVED BY:
DRAWN BY GP
DATE: 30 June 1998
REVISED 11Aug98
Pulse Height Analyzer Rev 5.1
MENA
DRAWING NUMBER
sheet 1 of 3