REVISIONS			
REV.	DESCRIPTION	DATE	APPROVED

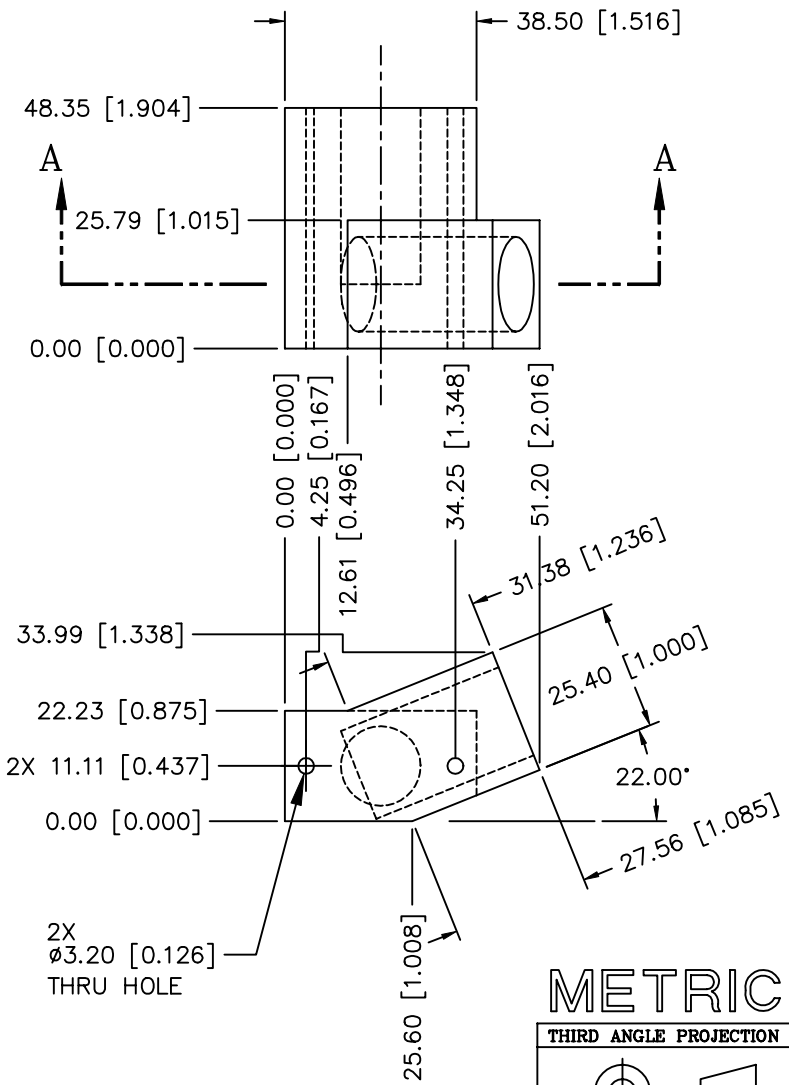

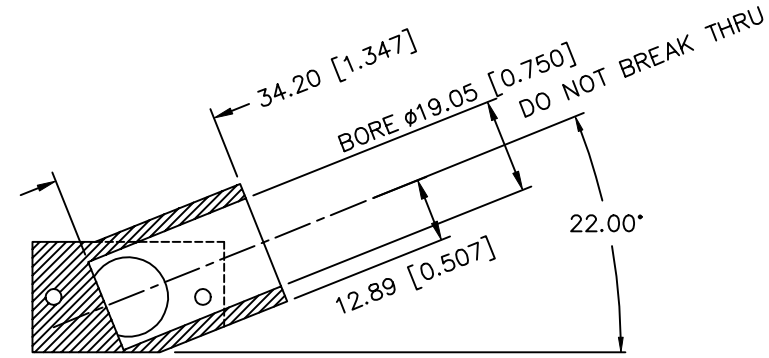

SECTION A–A

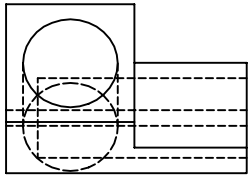

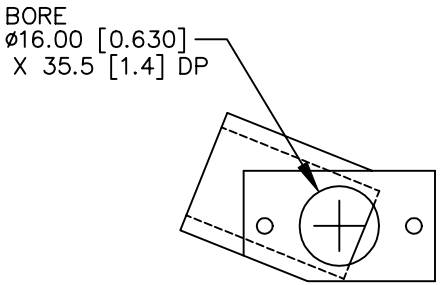

ITEM No.	QTY REQD	PART OR IDENTIFYING No.	NOMENCLATURE OR DESCRIPTION	MATERIAL SPECIFICATION
	1		BLACK DELRIN	

PARTS LIST

METRIC

THIRD ANGLE PROJECTION

NEXT	FINAL	NEXT ASSY	USED ON
QTY PER ASSY	REQD	APPLICATION	

TOLERANCES (EXCEPT AS SPECIFIED)

OVER	TO	TOLERANCE
0	49.99	±0.1
50	249.9	±0.1
250	-	±0.1
ANGLES		±2°

DO NOT SCALE DRAWING

TREATMENT

FINISH

SIMILAR TO

WEIGHT

CONTRACT No.

APPROVALS	DATE
DRAWN R.CHUNG	00JUN94
CHECKED	
ISSUED	
ACCOUNT No.	

SPACE SCIENCES LABORATORY

UNIVERSITY OF CALIFORNIA - BERKELEY

LOWER BULKHD CLAMP BLOCK
SI DET PURGE

SIZE B | MO No. | DWG. NO. 8255–A2 | REV

SCALE | SHEET 1 of 1