| REVISION | DESCRIPTION | DATE |
|---|---|---|

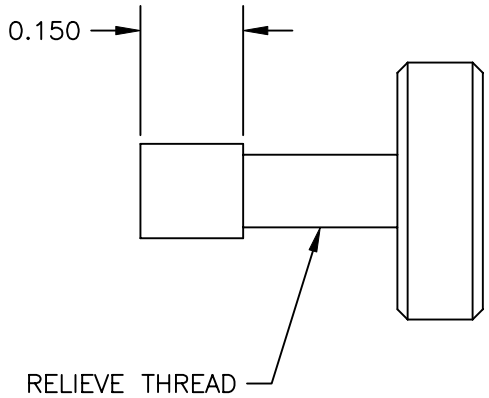


U.S. STD. THIRD ANGLE PROJECTION

UNLESS OTHERWISE SPECIFIED
DIMENSIONS ARE IN INCHES
BILATERAL TOLERANCES ARE:
.XX = .02" ANGLES SURFACES
.XXX = .005" 0.5° 32

| MATERIAL | DRAWN | CONTRACT /BUDGET NR | TITLE | SHEET |
|---|---|---|---|---|
| 6-32x3/8" SS THUMBSCREW | P. TURIN | SY-90 | IMAGE DUST COVER SCREW | |
| FINISH | DATE | SCALE - DO NOT SCALE - | DRAWING NR. | REVISION |
| | 9/18/97 | 4:1 | 8195-A4 | A |

SPACE SCIENCES LABORATORIES
UNIVERSITY OF CALIFORNIA, BERKELEY
BERKELEY, CA 94720 (415) 642-7297