REVISIONS				
ZONE	REV	DESCRIPTION	DATE	APPROVED
ALL	A	BASELINE RELEASE	27-OCT-97	BD

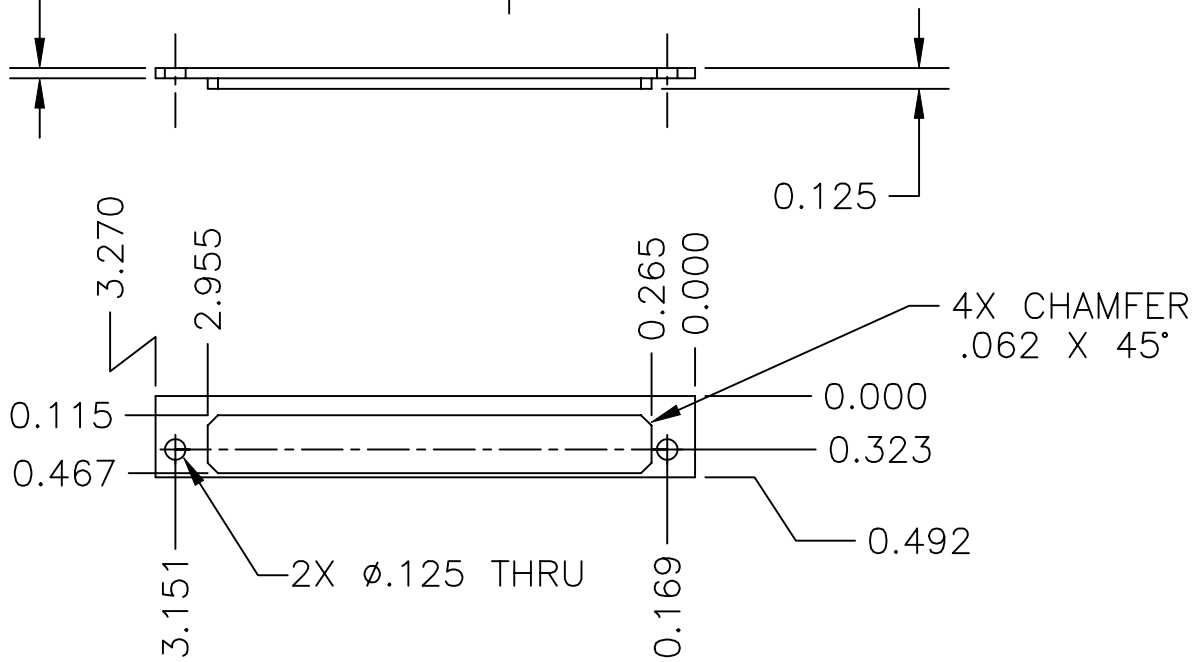

MATL: AL ALLOY 6061-T6

COVER PLATE, DPU FRAME

SURFACE TREAT ALODINE
600 PER MIL-C-5541 CL 3

SIZE	FSCM NO.	DWG NO.	REV
		8167-A4	A

SCALE FULL | SHEET 1 OF 1