REVISIONS			
REV.	DESCRIPTION	DATE	APPROVED
–	BASELINE RELEASE		

25 mm

ITEM#	QTY	PART NUMBER	NOMENCLATURE	MATERIAL SPECIFICATION

THIRD ANGLE PROJECTION

NEXT ASSY	FINAL ASSY	NEXT ASSY	USED ON
QTY PER ASSY	REQD	APPLICATION	

TOLERANCES (EXCEPT AS SPECIFIED)

OVER	TO	TOLERANCE
0	49.99	±0.1
50	249.9	±0.5
250	-	±1
ANGLES		±0.5°

SURFACE FINISH

SURFACE TREATMENT

MASS

DO NOT SCALE DRAWING
METRIC DRAWING
(UNITS mm)
INTERPRET PER ANSI Y14.5-1982
WELDING SYMBOLS PER ANSI/AWS A2.4-79

APPROVALS	DATE
DRAWN J. STOCK	3/21/97
CHECKED	
ISSUED	

Experimental Astrophysics Group
UNIVERSITY OF CALIFORNIA, BERKELEY, USA

DWG TITLE: BRAZED BODY ASSEMBLY
SI DETECTOR

SIZE A | PROGRAM IMAGE | DWG. NO. 8071-A3 | REV A
SCALE | SHEET 1 OF 3

REVISIONS			
REV.	DESCRIPTION	DATE	APPROVED
–	BASELINE RELEASE		
A	CREATE NEW DWG. NUM. FROM OLD DWG., NO DESIGN CHANGES.	3/21/97	D.S.

25 mm

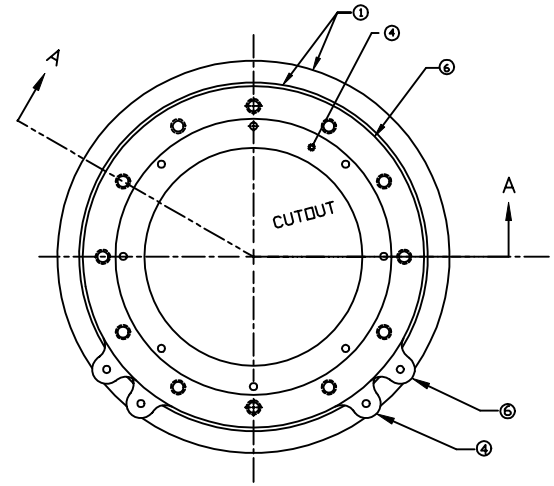

SIZE A | PROGRAM IMAGE | DWG. NO. 8071-A3 | REV A
SCALE 2X | SHEET 3 OF 3

SELECT THIS TEXT (IT BELONGS WITH A BLOCK OF ATTRIBUTES)
WITH 'DDATTE' TO INSERT TEXT INTO THE TITLEBLOCKS

NOTES (UNLESS OTHERWISE SPECIFIED):

1. INTERPRET DRAWING PER ANSIY14.5M - 1982.
2. SURFACE TEXTURE PER ANSI B46.1 - 1978. MICROMETERS - μm
3. DO NOT SCALE DRAWING. DRAWING MAY BE REPRODUCED.
4. BRAZE RUNOUT ONTO UNMETALLIZED CERAMIC FACES NOT TO EXCEED 0.15mm. EXTEND BRAZE OUT TO INNER AND OUTER EDGES OF CERAMIC ALONG ENTIRE CIRCUMFERENCE.
5. BRAZE RUNOUT ON THIS SURFACE NOT TO EXCEED 0.15 mm. NOT TO EXCEED 0.3 mm ALL OTHER METALLIC SURFACES.
6. ITEMS 1,2,4,5, AND 6 TO BE LOCATED WITHIN A POSITIONAL TOLERANCE OF

   0.10

   DATUMS A AND B PERTAIN TO ITEM 1.
7. DIMENSIONS, FLATNESS, AND PARALLELISM TO BE MAINTAINED AFTER BRAZING.
8. MATERIAL CERTIFICATIONS REQUIRED FOR ALL ITEMS.
9. CLEAN AND DEGREASE (REMOVE CUTTING FLUIDS, FINGERPRINT, ETC.) ALL ITEMS PRIOR TO BRAZING. CERAMIC PARTS TO BE KEPT FREE OF METAL MARKS, BRAZE, AND OTHER CONTAMINATION. MAINTAIN CLEANLINESS THRU BRAZING, INSPECTION, AND PREPARATION FOR DELIVERY.
10. PACKAGE ALL PARTS TO PROTECT FROM CONTAMINATION AND DAMAGE THAT MIGHT NORMALLY OCCUR DURING SHIPPING.
11. POLISHED SURFACE INDICATED HERE, FACING "UP".

REVISIONS			
REV.	DESCRIPTION	DATE	APPROVED
–	BASELINE RELEASE		
A	CREATE NEW DWG. NUM. FROM OLD DWG., NO DESIGN CHANGES.	3/21/97	D.S.

ITEM#	QTY	PART NUMBER	NOMENCLATURE	MATERIAL SPECIFICATION
6	1	8070-A3 (PREV. 00420)	CLAMP BASE RING	
5	1	8069-A3 (PREV. 00419)	CERAMIC INSULATOR RING	
4	1	8068-A3 (PREV. 00418)	MCP SUPPORT RING	
3	4	8067-A3 (PREV. 00417)	CuSil FOIL RING	
2	1	8066-A3 (PREV. 00416)	CERAMIC SPACER RING (COATED)	
1	1	8065-A3 (PREV. 00415)	DETECTOR BODY BASE	

25 mm

THIRD ANGLE PROJECTION

NEXT ASSY	FINAL ASSY	NEXT ASSY	USED ON
QTY PER ASSY	REQD	APPLICATION	

TOLERANCES (EXCEPT AS SPECIFIED)

OVER	TO	TOLERANCE
0	49.99	±0.1
50	249.9	±0.5
250	-	±1
ANGLES		±0.5°

SURFACE FINISH

SURFACE TREATMENT

MASS

DO NOT SCALE DRAWING
METRIC DRAWING
(UNITS mm)
INTERPRET PER ANSI Y14.5-1982
WELDING SYMBOLS PER ANSI/AWS A2.4-79

APPROVALS	DATE
DRAWN J. STOCK	3/21/97
CHECKED D. SIEGMUND	3/21/97
ISSUED J. STOCK	3/24/97

Experimental Astrophysics Group
UNIVERSITY OF CALIFORNIA, BERKELEY, USA

DWG TITLE: BRAZED BODY ASSEMBLY
SI DETECTOR

SIZE A | PROGRAM IMAGE | DWG. NO. 8071-A3 (PREV. 00423) | REV A
SCALE N/A | SHEET 1 OF 3

REVISIONS			
REV.	DESCRIPTION	DATE	APPROVED
–	BASELINE RELEASE		
A	CREATE NEW DWG. NUM. FROM OLD DWG., NO DESIGN CHANGES.	3/21/97	D.S.

25 mm

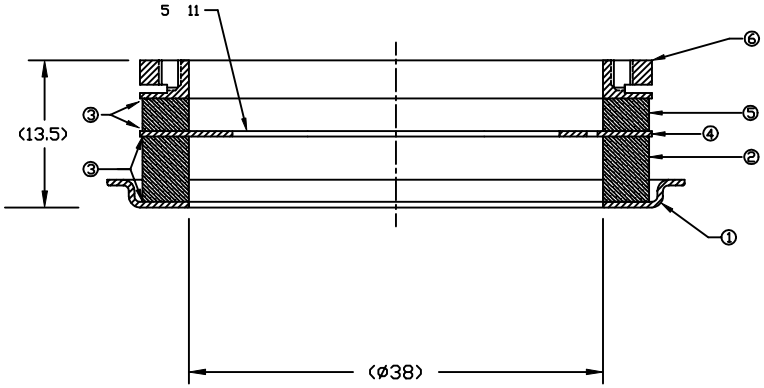

SECTION A–A

SCALE: 3X

SIZE A | PROGRAM IMAGE | DWG. NO. 8071-A3 | REV A
SCALE 3X | SHEET 2 OF 3