REVISIONS			
REV.	DESCRIPTION	DATE	APPROVED
–	BASELINE RELEASE		
A	CREATE NEW DWG. NUM. FROM OLD DWG., NO DESIGN CHANGE	3/25/97	D. SIEGMUND

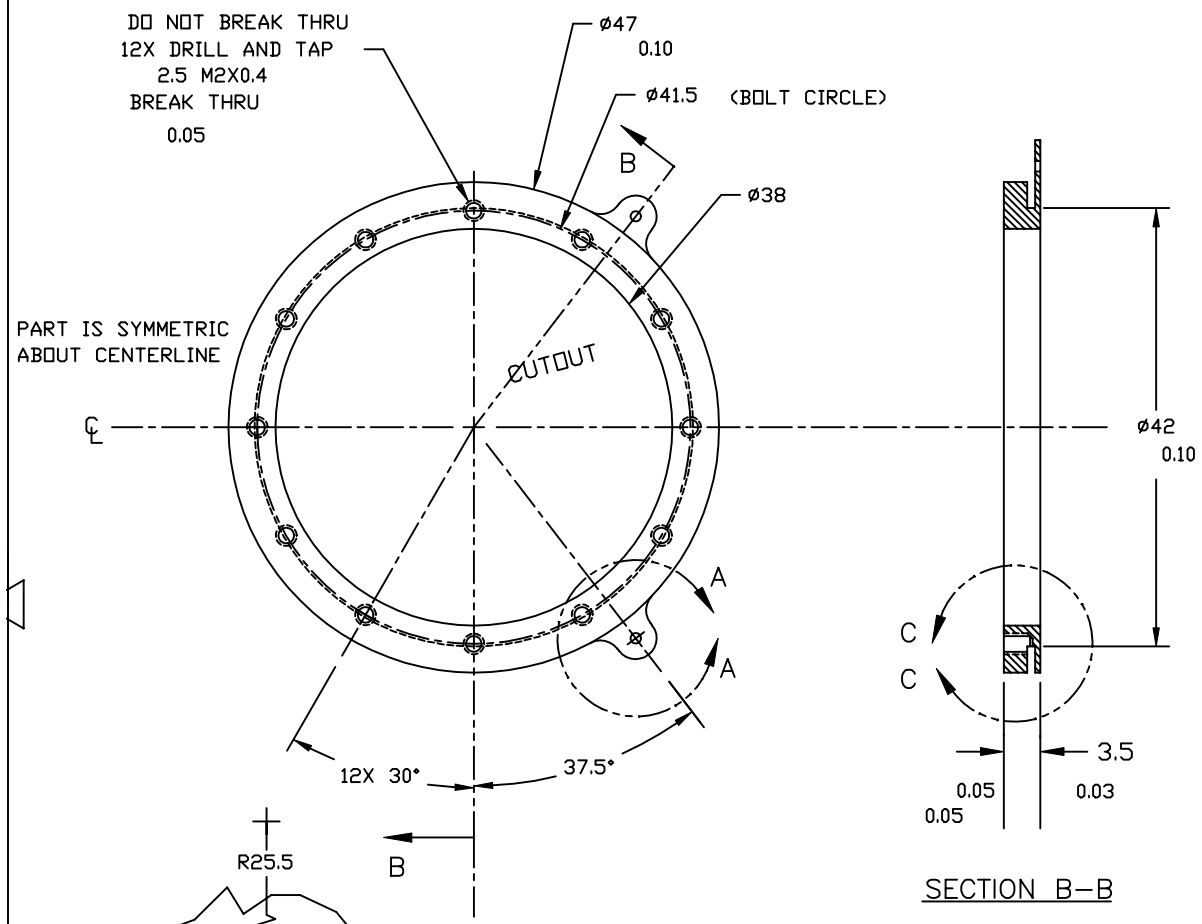

SECTION B–B

NOTES (UNLESS OTHERWISE SPECIFIED):

1. INTERPRET DRAWING PER ANSIY14.5M – 1982.
2. SURFACE TEXTURE PER ANSI B46.1 – 1978. MICROMETERS – μm
3. DO NOT SCALE DRAWING. DRAWING MAY BE REPRODUCED.
4. REMOVE BURRS AND BREAK SHARP EDGES R 0.125.
5. USE SULFUR FREE MACHINE OILS.
6. DIMENSIONS APPLY AFTER ANNEALING OR OTHER HEAT TREATMENT.

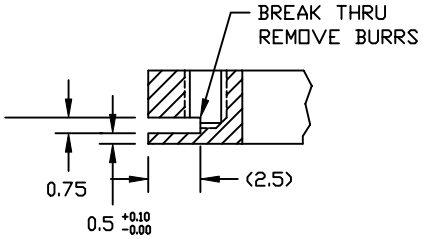

SECTION C–C

SCALE 4:1

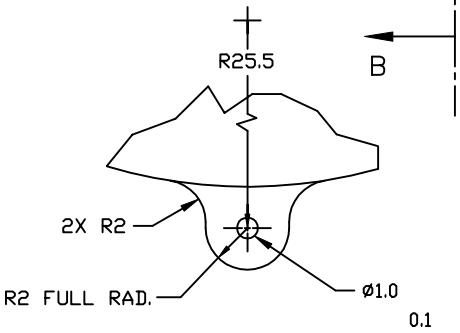

DETAIL A–A

2X

SCALE 4:1

25 mm

THIRD ANGLE PROJECTION

NEXT	FINAL	NEXT ASSY	USED ON
QTY REQD PER ASSY		APPLICATION	

TOLERANCES (EXCEPT AS SPECIFIED)		
OVER	TO	TOLERANCE
0	49.99	±0.1
50	249.9	±0.5
250	–	±1
ANGLES		±0.1°

SURFACE FINISH 0.8

SURFACE TREATMENT
ELECTROPOLISH

MASS

ITEM#	QTY	PART NUMBER	NOMENCLATURE	MATERIAL SPECIFICATION
1				KOVAR

DO NOT SCALE DRAWING
METRIC DRAWING
(UNITS: mm)
INTERPRET PER ANSI Y14.5-1982
WELDING SYMBOLS PER ANSI/AWS A2.4-79

APPROVALS		DATE
DRAWN	J. STOCK	3/21/97
CHECKED	D. SIEGMUND	3/21/97
ISSUED	J. STOCK	3/25/97

Experimental Astrophysics Group
UNIVERSITY OF CALIFORNIA, BERKELEY, USA

DWG TITLE
CLAMP BASE RING
SI DETECTOR

SIZE	PROGRAM	DWG. NO.	REV
B	IMAGE	(PREV. 00420) 8070-A3	A

SCALE 2/1 SHEET 1 OF 1