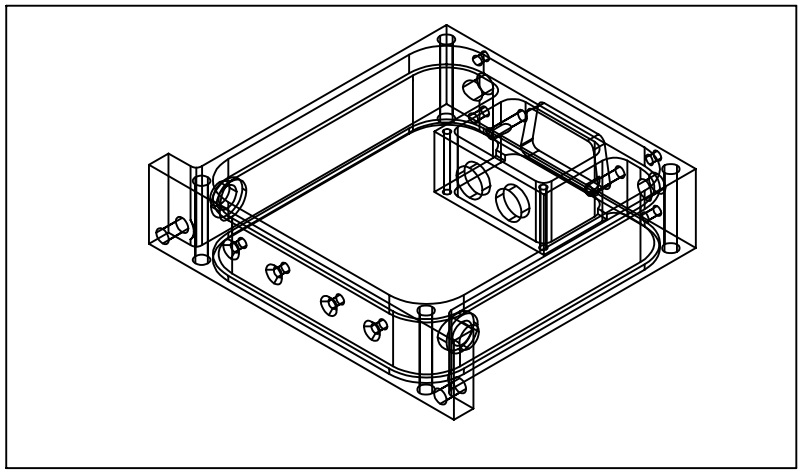

REVISIONS			
REV.	DESCRIPTION	DATE	APPROVED
B	INCREASED WALL THICKNESS, ADDED BOTTOM CSK HOLES	10/14/97	

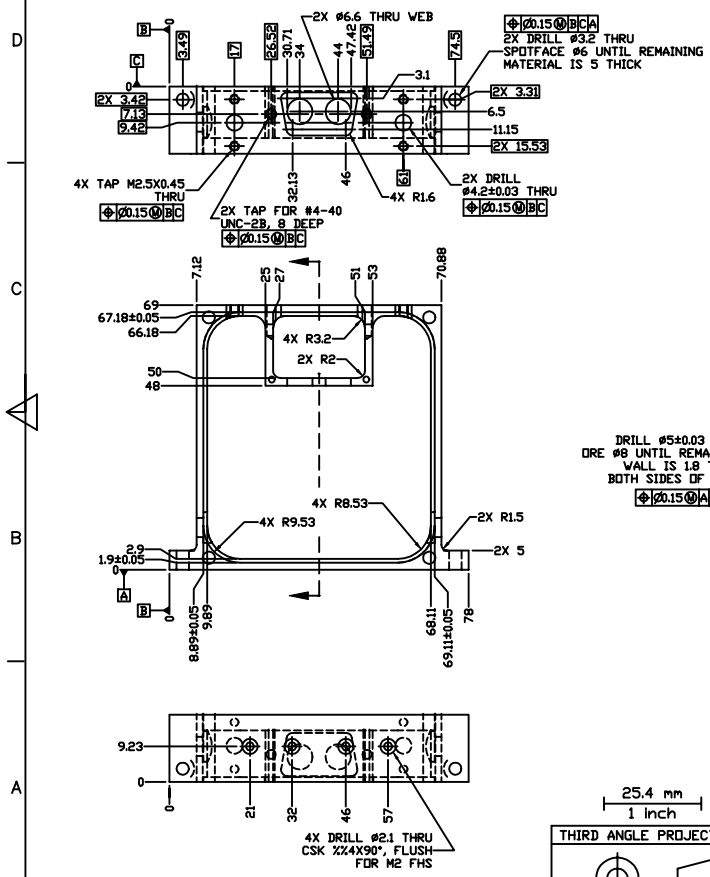

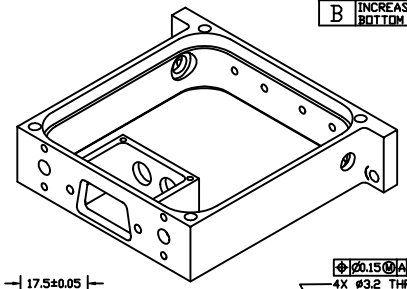

REFERENCE ISOMETRIC VIEW

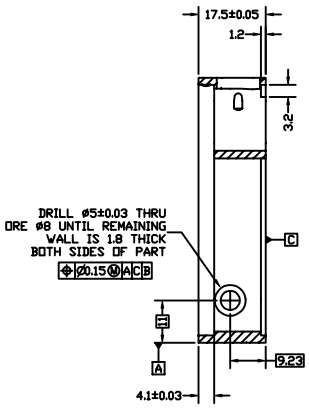

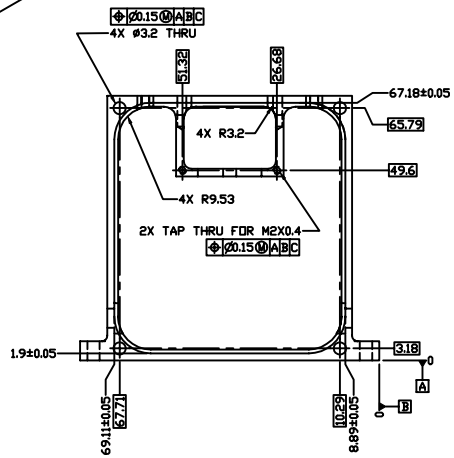

ITEM#	QTY	PART NUMBER	NOMENCLATURE	MATERIAL SPECIFICATION
1	A/R		ALUMINUM, 6061-T651	QQ-A-250/12

TOLERANCES (EXCEPT AS SPECIFIED)		
OVER	TO	TOLERANCE
0	49.99	±0.1
50	249.9	±0.5
250	-	±1
ANGLES		±1°

SURFACE FINISH 1.6

SURFACE TREATMENT
ALODINE 600 PER
MIL-C-5541

MASS 31.8g

DO NOT SCALE DRAWING
METRIC DRAWING
(UNITS: mm)

INTERPRET PER ANSI Y14.5-1994
WELDING SYMBOLS PER ANSI/AWS A2.4-79

APPROVALS	DATE
DRAWN K. KROMER	9/10/97
CHECKED	
ISSUED	

25.4 mm
1 inch

THIRD ANGLE PROJECTION

Space Sciences Laboratory
UNIVERSITY OF CALIFORNIA, BERKELEY, USA

DWG TITLE
PREAMP BOX -01
FUV SI DETECTOR

SIZE	PROGRAM	DWG. NO.	REV
B	IMAGE	8051-A4	B

SCALE FULL SHEET 1 OF 1