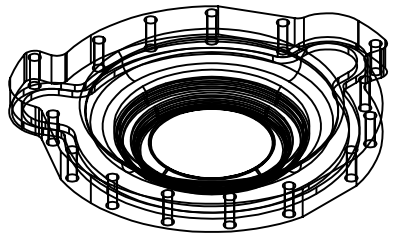

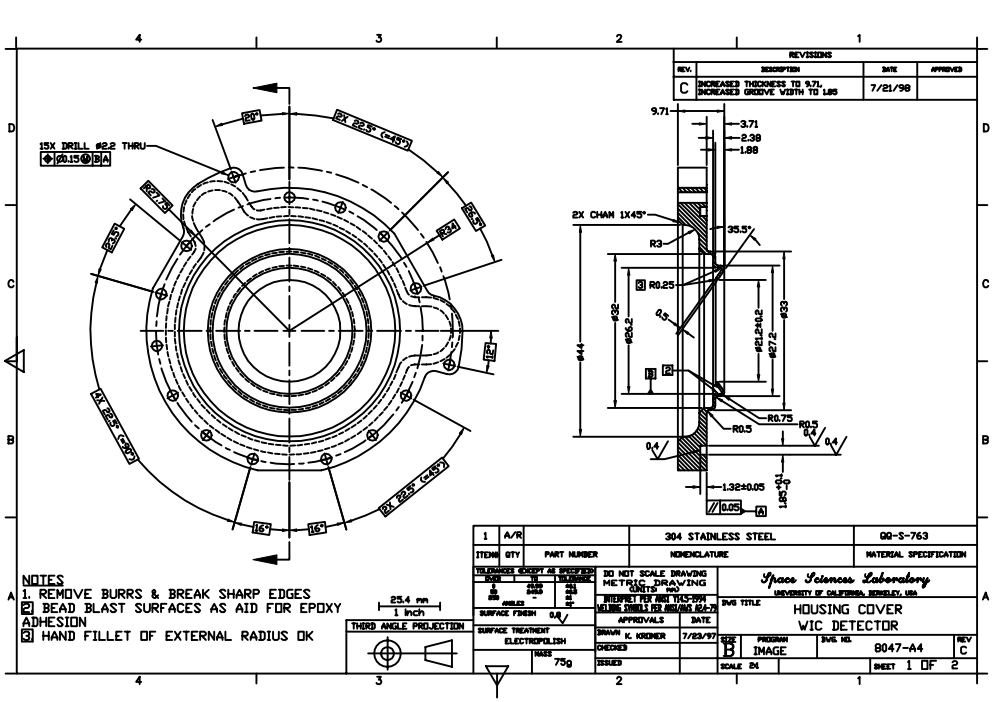
15X DRILL ø2.2 THRU
⌖ ø0.15 Ⓜ B A
8X 22.5° (=45°)
4X 22.5° (=90°)
8X 22.5° (=45°)
20°
16°
16°
R27.75
23.5°
23.5°
R24
R5.5
12°
2X CHAM 1X45°
R3
35.5°
R0.25
0.9
9.71
3.71
2.38
1.88
ø44
ø32
ø26.2
ø21.2±0.2
ø27.2
ø33
R0.75
R0.5
0.4
0.4
0.4
1.32±0.05
1.85±0.1
0.05 A
NOTES
1. REMOVE BURRS & BREAK SHARP EDGES
2. BEAD BLAST SURFACES AS AID FOR EPOXY ADHESION
3. HAND FILLET OF EXTERNAL RADIUS OK
25.4 mm
1 inch
THIRD ANGLE PROJECTION
REVISIONS
REV. | DESCRIPTION | DATE | APPROVED
C | INCREASED THICKNESS TO 9.71, INCREASED GROOVE WIDTH TO 1.85 | 7/21/98
1 | A/R | 304 STAINLESS STEEL | QQ-S-763
ITEM | QTY | PART NUMBER | NOMENCLATURE | MATERIAL SPECIFICATION
TOLERANCES EXCEPT AS SPECIFIED
DIM | TOL | VARIANCE
± | ±0.05 | ±0.1
± | ± | ±1°
ANGLES
SURFACE FINISH 0.8
SURFACE TREATMENT ELECTROPOLISH
MASS 75g
DO NOT SCALE DRAWING
METRIC DRAWING
UNITS: mm
INTERPRET PER ANSI Y14.5-1994
VOLUME 3 SUBVOL 3 PER ANSI/ASME B24-79
APPROVALS | DATE
DRAWN K. KROMER 7/23/97
CHECKED
ISSUED
Space Sciences Laboratory
UNIVERSITY OF CALIFORNIA, BERKELEY, USA
DWG TITLE
HOUSING COVER
WIC DETECTOR
SIZE B | PROGRAM IMAGE | DWG. NO. 8047-A4 | REV C
SCALE 2:1 | SHEET 1 OF 2

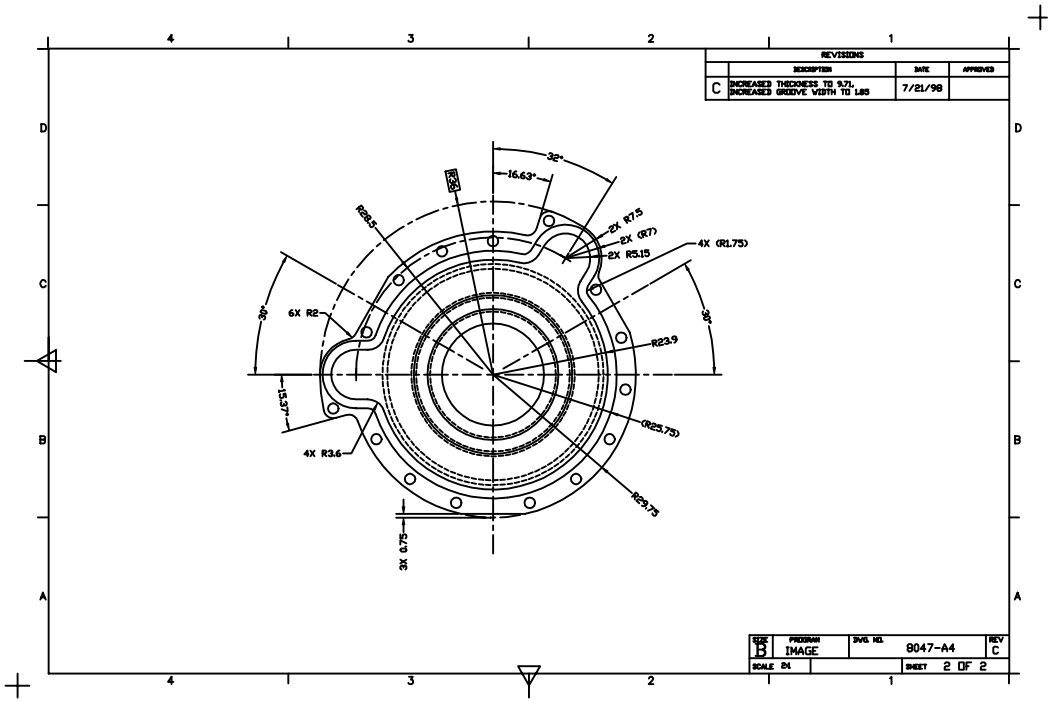
REVISIONS
REV. | DESCRIPTION | DATE | APPROVED
C | INCREASED THICKNESS TO 9.71, INCREASED GROOVE WIDTH TO 1.85 | 7/21/98
32°
16.63°
R28.5
2X R7.5
2X (R7)
2X R5.15
4X (R1.75)
30°
6X R2
30°
R23.9
15.37°
(R25.75)
4X R3.6
R23.75
3X 0.75
SIZE B | PROGRAM IMAGE | DWG. NO. 8047-A4 | REV C
SCALE 2:1 | SHEET 2 OF 2