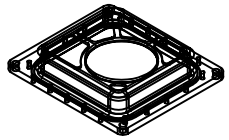

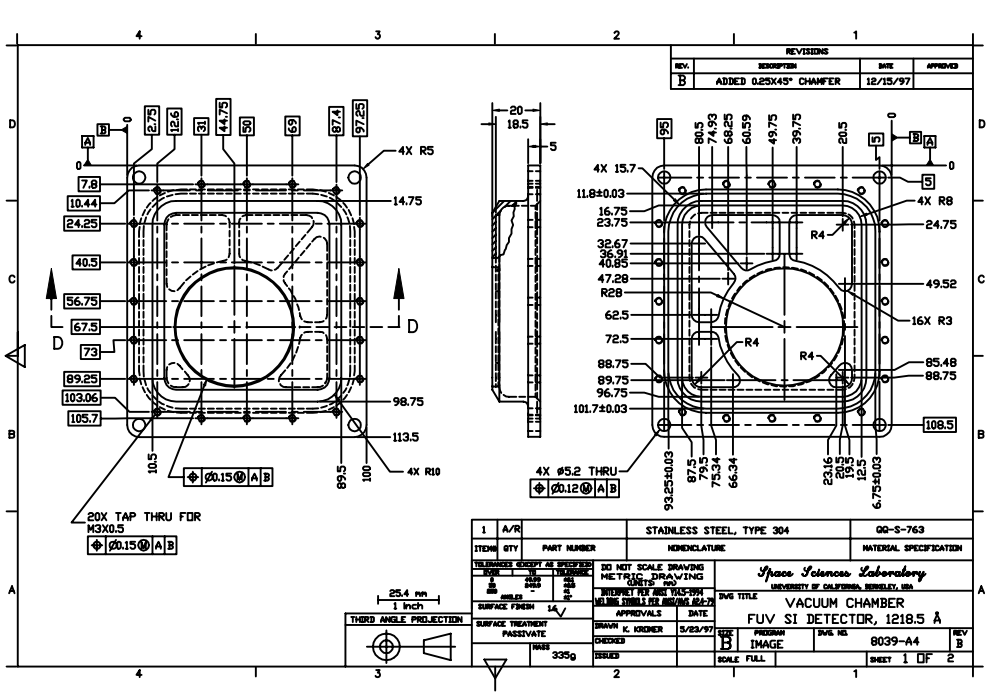
REVISIONS
REV. | DESCRIPTION | DATE | APPROVED
B | ADDED 0.25X45° CHAMFER | 12/15/97
4X R5
14.75
98.75
113.5
4X R10
20X TAP THRU FOR M3X0.5
⌖ Ø0.15Ⓜ A B
4X Ø5.2 THRU
⌖ Ø0.12Ⓜ A B
4X 15.7
11.8±0.03
16.75
23.75
32.67
36.91
40.85
47.28
R28
62.5
72.5
88.75
89.75
96.75
101.7±0.03
4X R8
24.75
49.52
16X R3
85.48
88.75
108.5
93.25±0.03
6.75±0.03
R4
1 | A/R | STAINLESS STEEL, TYPE 304 | QQ-S-763
ITEMS | QTY | PART NUMBER | NOMENCLATURE | MATERIAL SPECIFICATION
TOLERANCES EXCEPT AS SPECIFIED
DO NOT SCALE DRAWING
METRIC DRAWING
UNITS: mm
PROJECT FOR ASME Y14.5-1994
MILITARY STANDARD PER ANSI/ASME Y14.1-72
APPROVALS | DATE
DRAWN K. KROMER 5/23/97
CHECKED
ISSUED
Space Sciences Laboratory
UNIVERSITY OF CALIFORNIA, BERKELEY, USA
DWG TITLE
VACUUM CHAMBER
FUV SI DETECTOR, 1218.5 Å
SIZE B | PROGRAM IMAGE | DWG. NO. 8039-A4 | REV B
SCALE FULL | SHEET 1 OF 2
SURFACE FINISH
SURFACE TREATMENT PASSIVATE
MASS 335g
25.4 mm
1 inch
THIRD ANGLE PROJECTION

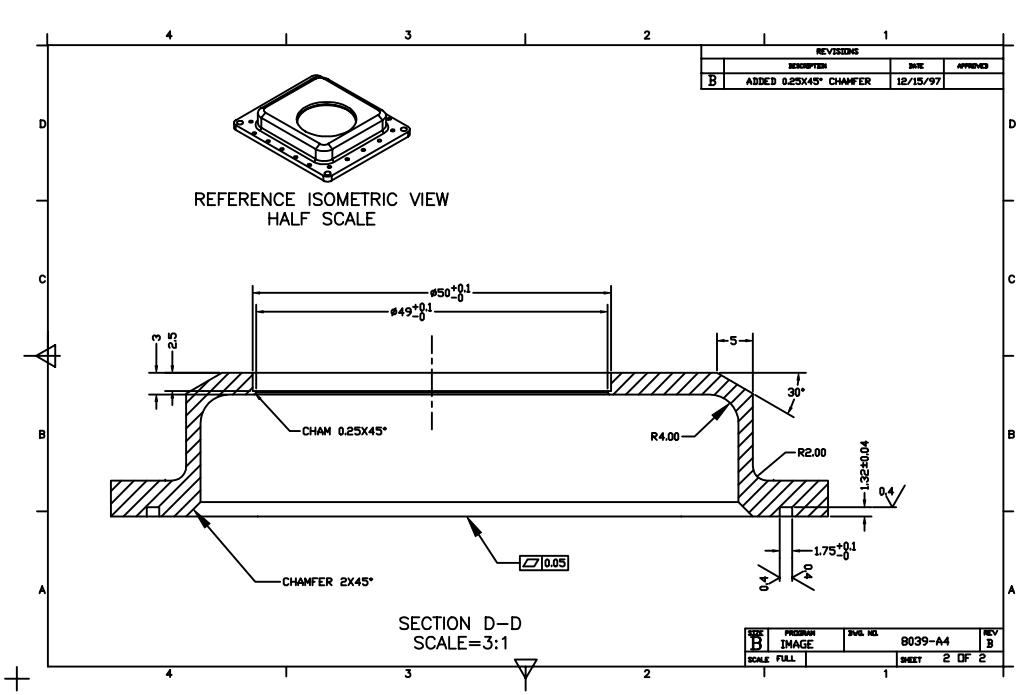
REVISIONS
REV. | DESCRIPTION | DATE | APPROVED
B | ADDED 0.25X45° CHAMFER | 12/15/97
REFERENCE ISOMETRIC VIEW
HALF SCALE
ø50 +0.1 −0
ø49 +0.1 −0
CHAM 0.25X45°
R4.00
R2.00
30°
1.32±0.04
1.75 +0.1 −0
CHAMFER 2X45°
0.05
SECTION D–D
SCALE=3:1
SIZE B | PROGRAM IMAGE | DWG. NO. 8039-A4 | REV B
SCALE FULL | SHEET 2 OF 2