REVISIONS				
ZONE	REV	DESCRIPTION	DATE	APPROVED

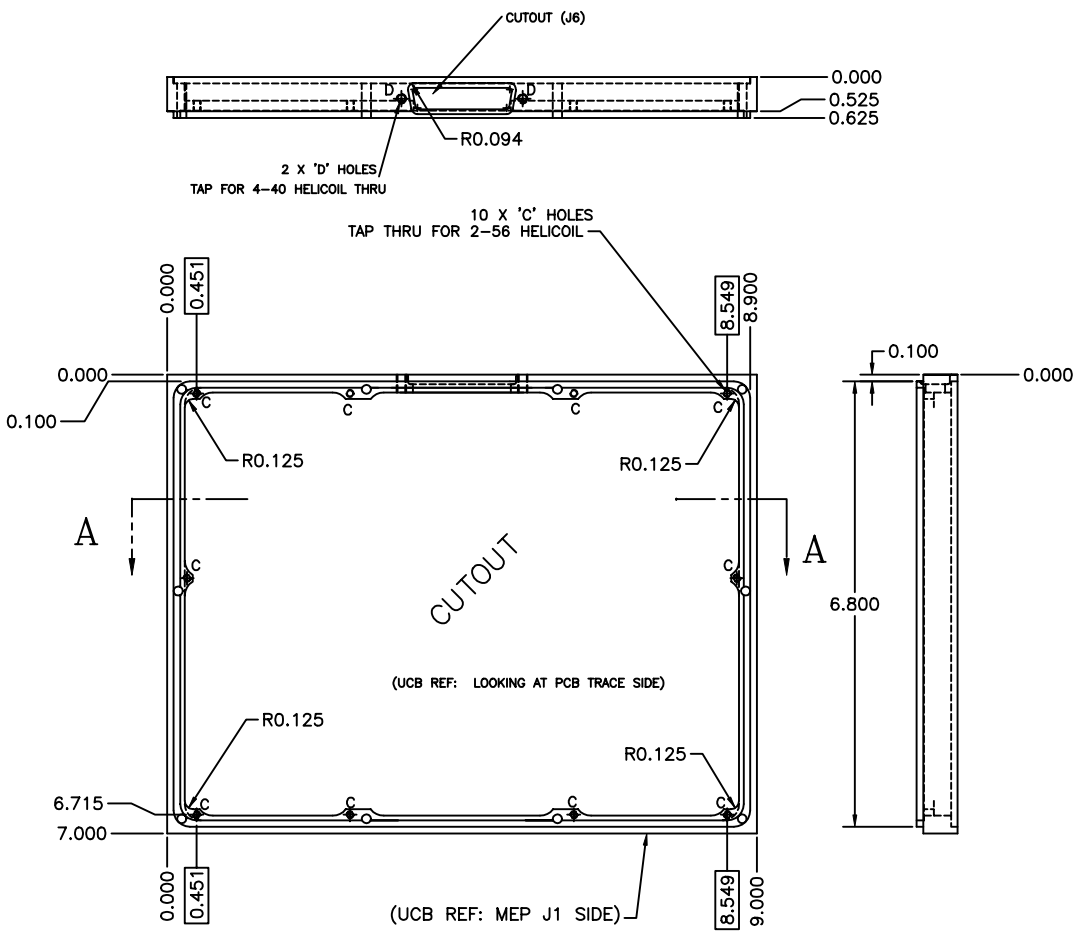

VIEW C-C

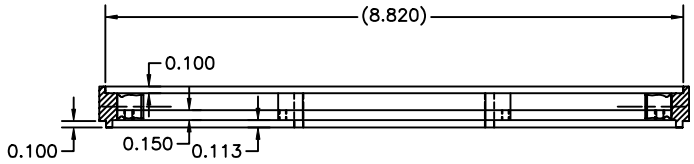

SECTION A-A

NOTES: UNLESS OTHERWISE SPECIFIED

1. INTERPRET DWG PER ASME Y14.5M-1994
2. REMOVE BURRS AND BREAK SHARP EDGES
3. DWG NOT COMPLETELY DIMENSIONED.
   SEE .DXF FILE FOR COMPLETE PART GEOMETRY.
4. SURFACE TREATMENT: ALODINE 600 PER MIL-C-5541 CL 3 (GOLD)
5. FILLET RAD .25

SIZE	FSCM NO.	DWG NO.	REV
		8018-A2	A
SCALE 1/2		SHEET 2 OF 2	