REVISIONS				
ZONE	REV	DESCRIPTION	DATE	APPROVED
ALL	B	ADDED 'D' HOLES	27-OCT-97	DONAKOWSKI
ALL	C	MOVED J18 CUTOUT LOCATION	28-OCT-97	DONAKOWSKI

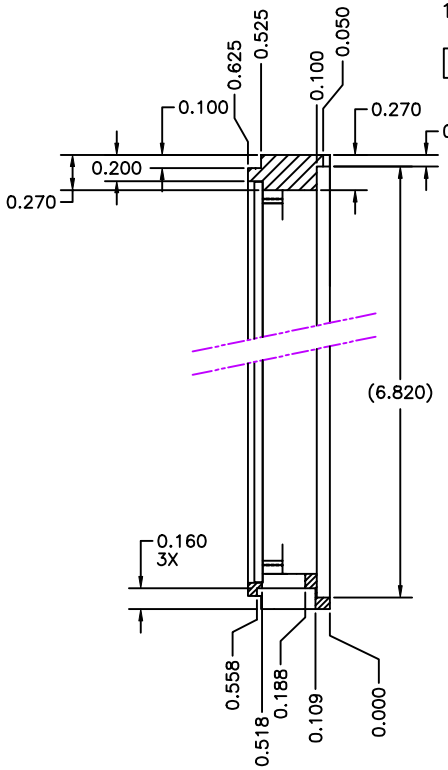

SECTION B–B
SCALE: 1/1

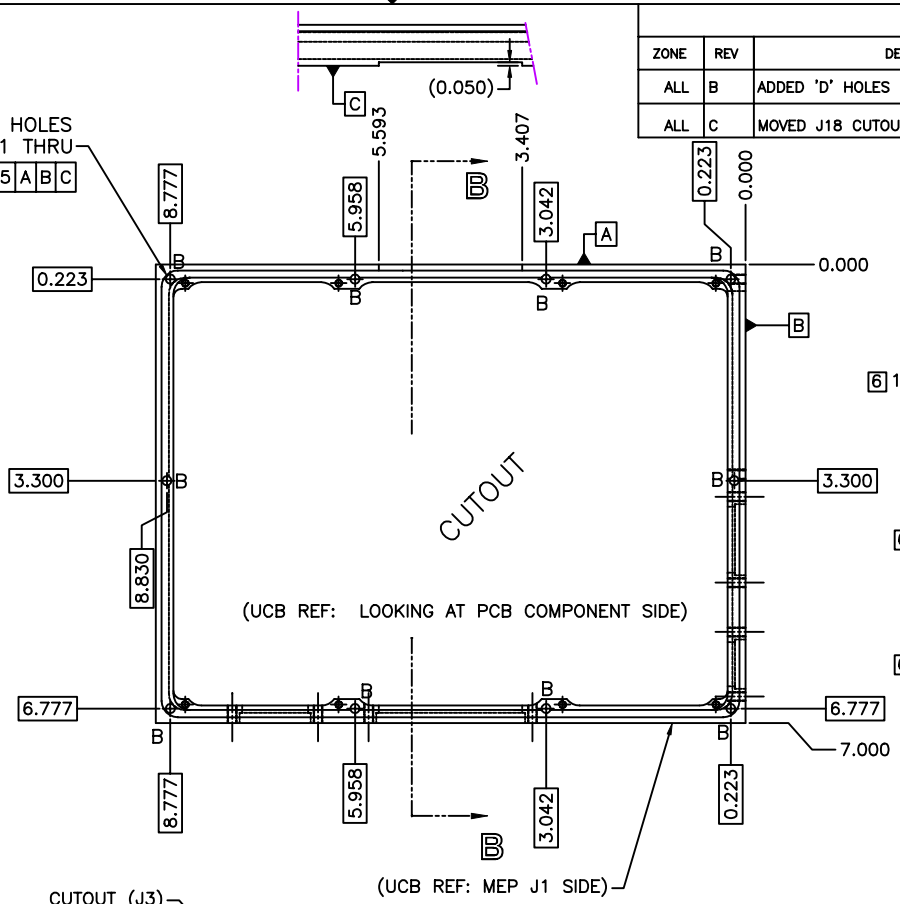

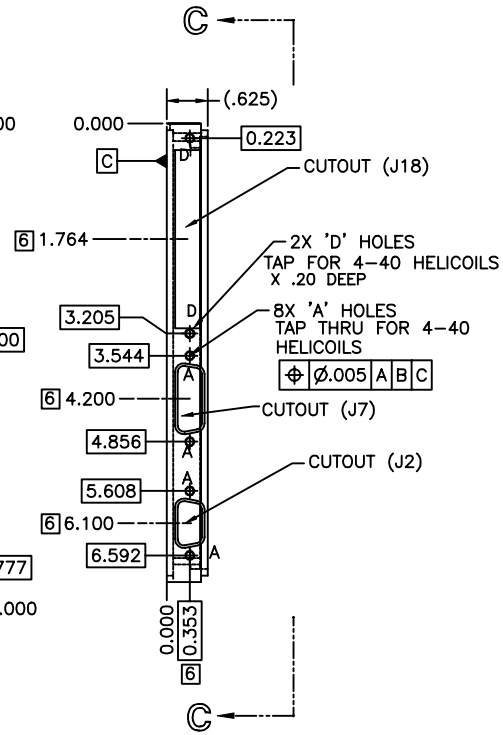

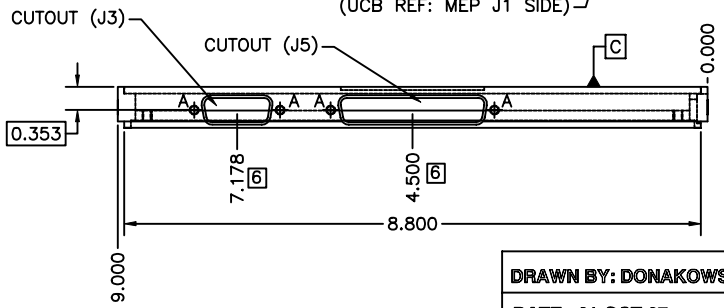

NOTES: UNLESS OTHERWISE SPECIFIED
1. INTERPRET DWG PER ASME Y14.5M–1994
2. REMOVE BURRS AND BREAK SHARP EDGES
3. DWG NOT COMPLETELY DIMENSIONED.
   SEE .DXF FILE FOR COMPLETE PART GEOMETRY.
4. SURFACE TREATMENT: ALODINE 600 PER MIL–C–5541 CL 3 (GOLD)
5. FILLET RAD .25
6. DIM FROM CENTER LINE OF CONNECTOR CUTOUT

MATL: AL ALLOY 6061–T6
PER QQ–A–250/11

DPU FRAME (MEP)

DRAWN BY: DONAKOWSKI	SIZE	FSCM NO.	DWG NO. 8017–A4	REV C
DATE: 01-OCT-97	SCALE 1/2		SHEET 1 OF 2	