REV	DATE	DESCRIPTION	BY	APPROVED
B		ADD ION PUMP	3JUL97	
C		ADDED OPTICAL CUBE; MOVED ATTACH LEG 122.24 (WAS) 115.03	11JUL97	
D		ADDED TOP VIEW, SHT 2	12NOV97	

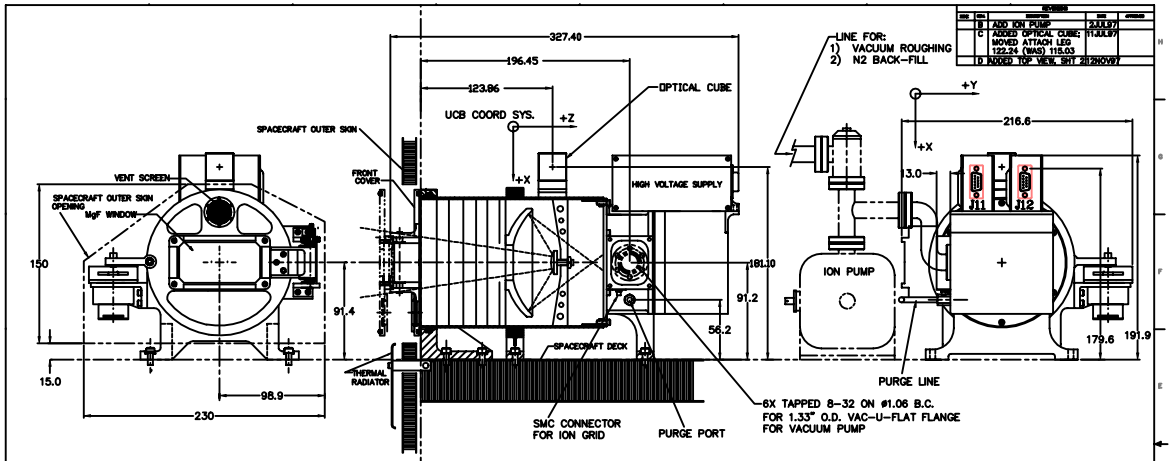

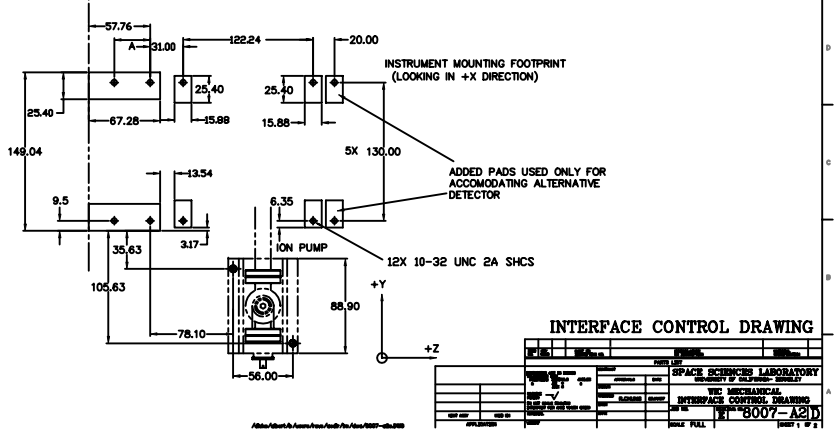

NOTES:

1. TOTAL MASS: 5.5 kg
2. EXTERIOR MATERIAL: ALUM., GRAPHITE COMPOSITE, NORYL, MgF
3. SURFACE FINISH: BARE MAT'L, BLACK ANODIZE.
4. SURFACE PROPERTIES: EMISSIVITY: TBD ABSORPTIVITY: TBD
5. TOTAL CONTACT AREA: TBD
6. THERMAL CAPACITY: TBD
7. ROUGHNESS OF CONTACT AREA: TBD
8. MOMENTS OF INERTIA: Ixx=TBD, Iyy=TBD, Izz=TBD.
9. CENTER OF GRAVITY LOCATION: TBD

A DISTANCE FROM FORWARD FASTENER TO SPACECRAFT SKIN TO BE KEPT TO MINIMUM, AND TO BE DETERMINED BY SPACECRAFT MANUFACTURER.

INTERFACE CONTROL DRAWING

SPACE SCIENCES LABORATORY
UNIVERSITY OF CALIFORNIA - BERKELEY

WIC MECHANICAL INTERFACE CONTROL DRAWING

E1 8007-A2D

SCALE FULL

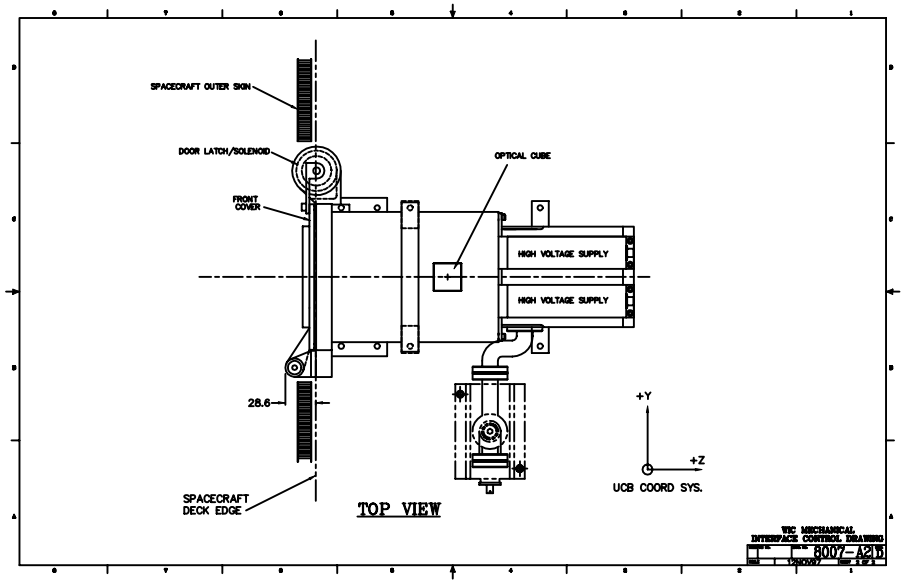

WIC MECHANICAL INTERFACE CONTROL DRAWING

8007-A2D